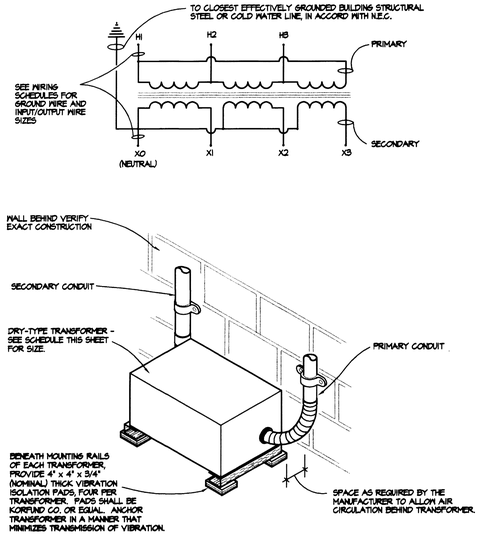

NOTE: THE FINAL 12" TO 18" OF RACEWAY CONNECTION TO BOTH PRIMARY AND SECONDARY SIDES SHALL BE "SEALTITE" TYPE UA FLEXIBLE CONDUIT OR EQUAL, FOR VIBRATION ISOLATION.

NOTE: ALL FLOOR - MOUNTED TRANSFORMERS 75KVA AND HIGHER TO HAVE A 5" HIGH REINFORCED CONCRETE PAD. 4" LARGER THAN TRANSFORMER.

DETAIL OF TYPICAL DRY-TYPE TRANSFORMER INSTALLATION

NOT TO SCALE

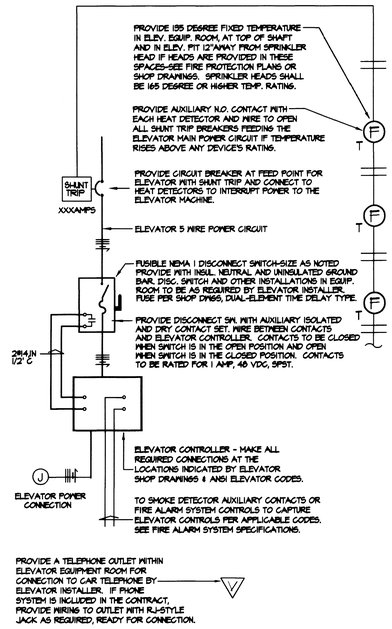

ELEVATOR POWER WIRING DIAGRAM

NOT TO SCALE

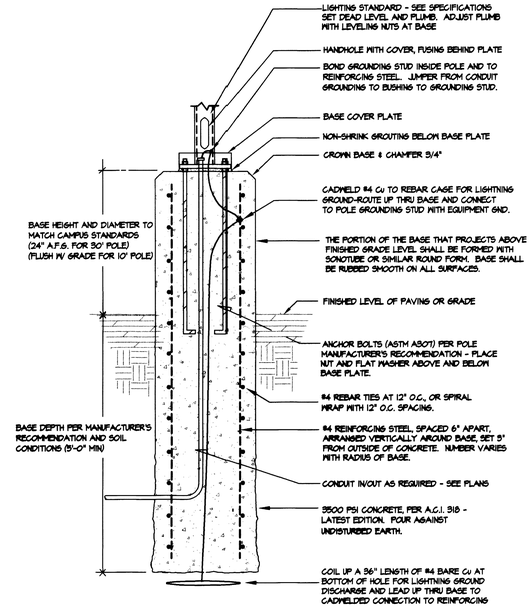

DETAIL OF PYLON LIGHTING STANDARD BASE

NOT TO SCALE

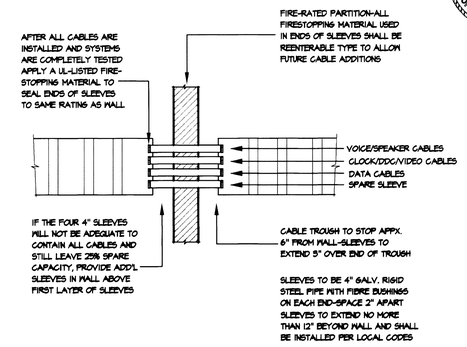

DETAIL OF CABLE TROUGH PENETRATION THRU RATED WALL

NOT TO SCALE

DISCONNECT SWITCH SCHEDULE		SPECIAL NOTES:
EQUIPMENT	DISCONNECT SWITCH INFORMATION	• ALL PANELBOARDS SHALL CONTAIN A FULL 42 OR 84 POLE MOUNTING SPACE CAPABILITY.
HP-7, 9, 12, 18, 24 HP-7V, 9V, 24V B-1, 2, 3, 4	MOTOR RATED SNAP SWITCH	• ALL SURGE SUPPRESSION DEVICES SHALL BE MOUNTED IN NEAREST POSITION TO INCOMING FEEDERS. IE BREAKER SPACE #1 OR #3 FOR TOP FEED AND BREAKER SPACE #41 OR #42 FOR BOTTOM FEED.
HP-28, 36, 42, 60 HP-24V, 36V, 42V, 60V	3P, 30A, 480V, NEMA 1 DISCONNECT SWITCH FUSED PER UNIT NAMEPLATE	• REFER TO MECHANICAL ROOM FOR ALLOWABLE SERVICE ENTRANCE AND DISTRIBUTION SPACE. ARRANGE GEAR, TRANSFORMERS, PANELBOARDS, ETC. SO NOT TO EXCEED THIS SPACE. UTILIZE FREE STANDING GEAR WITH APPROPRIATE ACCESSIBILITY AS NECESSARY. MAINTAIN ALL NEC REQUIRED CLEARENCES. SUBMIT DETAILED ELEVATIONS AND PLAN VIEW DRAWINGS WITH SHOP DRAWINGS.
MH-1	3P, 30A, 208V., NEMA 1 DISCONNECT SWITCH FUSED PER UNIT NAMEPLATE	

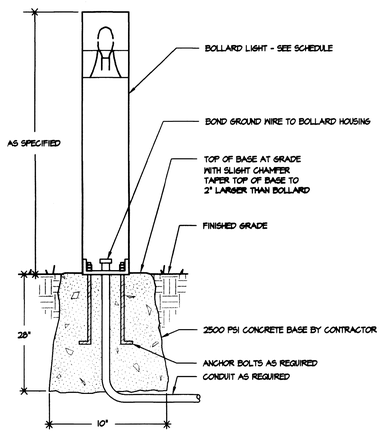

DETAIL OF BOLLARD LIGHT INSTALLATION

NOT TO SCALE

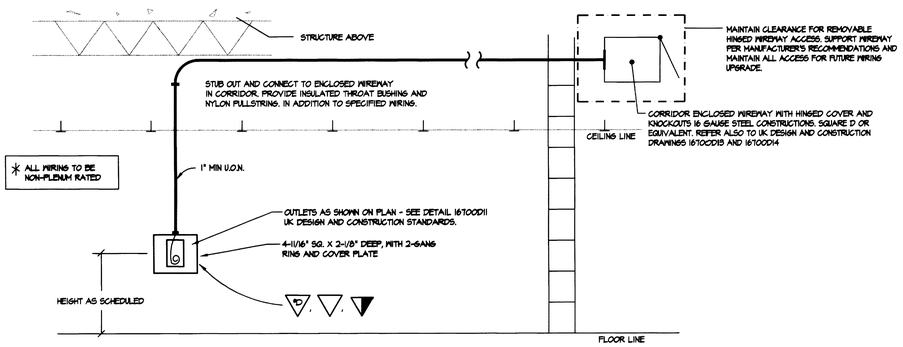

ROUGHING-IN DETAIL FOR STUB-OUTS

NOT TO SCALE

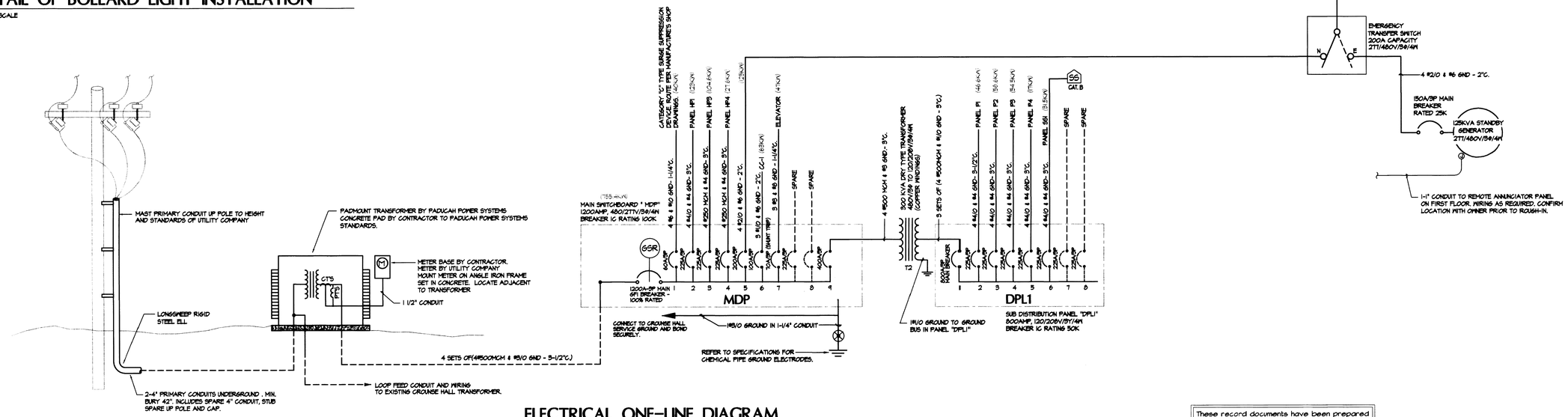

ELECTRICAL ONE-LINE DIAGRAM

NOT TO SCALE

These record documents have been prepared on the basis of information furnished by the contractor. CMTA, Inc. is not responsible for any errors or omissions which may have been incorporated into this document as a result of incomplete or erroneous information.

Consulting Engineers
Mechanical Electrical
1400 N. Forbes Rd.
Lexington, KY 40511
859/253/0892

Crisp Building Replacement
Paducah Community College

ELECTRICAL DETAILS

Sherman·Carter·Barnhart PSC
PARTNERS IN ARCHITECTURE
2405 HARRODSBURG ROAD LEXINGTON, KY 40504 PH: 859-224-1951 · FAX: 859-224-8446

JOB NO.	0044/CCC00
DATE	11-20-00
DRAWN	HG
CHECKED	DRH/TEM

COPYRIGHT © 2000 SHERMAN / CARTER / BARNHART, PSC

REVISIONS

1 RECORD DRAWINGS 9/13/02

SHEET

ME-14

Call# Slot Document# 174 B-1 23184