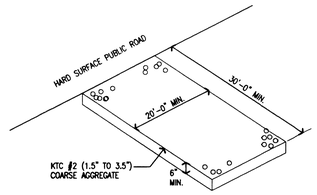

NOTE: PERIODIC TOP DRESSING WITH NEW GRAVEL WILL BE REQUIRED AT INTERVALS DETERMINED BY THE ARCHITECT AND ENGINEER. REMOVE ENTRANCE UPON COMPLETION OF CONSTRUCTION ACTIVITY.

TEMPORARY CONSTRUCTION ENTRANCE DETAIL (A)
N.T.S.

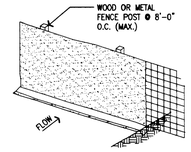

NOTES:
1. FENCE POST SHALL BE AT LEAST 5 FEET LONG, AND METAL FENCE FABRIC SHALL BE AT LEAST 14 GAUGE, 36 INCHES HIGH, AND WITH OPENINGS NO LARGER THAN 6 INCHES BY 6 INCHES. GEOTEXTILE FABRIC SHALL BE A MATERIAL RECOMMENDED FOR THIS USE BY THE MANUFACTURER.

2. THE BOTTOM 12 INCHES OF THE FABRIC SHALL BE BURIED IN A 6 INCH TRENCH CUT INTO THE GROUND TO PREVENT SEDIMENT ESCAPING UNDER THE FENCE. ALL EARTHWORK SHALL BE DONE ON THE UPSTREAM SIDE OF THE FENCE.

3. THE SILT FENCE SHALL BE ERECTED BEFORE GRADING IS BEGUN. THE GEOTEXTILE FABRIC SHALL BE ATTACHED TO THE FENCE, ON THE UPSTREAM SIDE, USING STAPLES, HOG RINGS OR OTHER APPROVED METHOD.

4. SILT FENCE SHALL BE INSPECTED AND MAINTAINED AS DESCRIBED ON PLANS. REMOVE SILT FENCE UPON ESTABLISHMENT OF PERMANENT GROUND COVER.

TEMPORARY SILT FENCE DETAIL (B)
N.T.S.

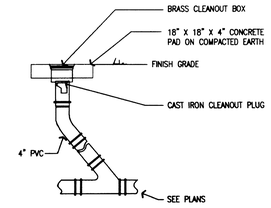

EXTERIOR CLEANOUT DETAIL (C)
N.T.S.

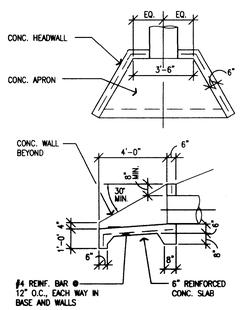

CONC. HEADWALL (D)
N.T.S.

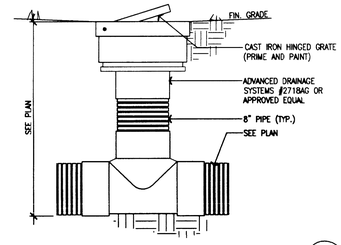

YARD DRAIN DETAIL (E)
N.T.S.

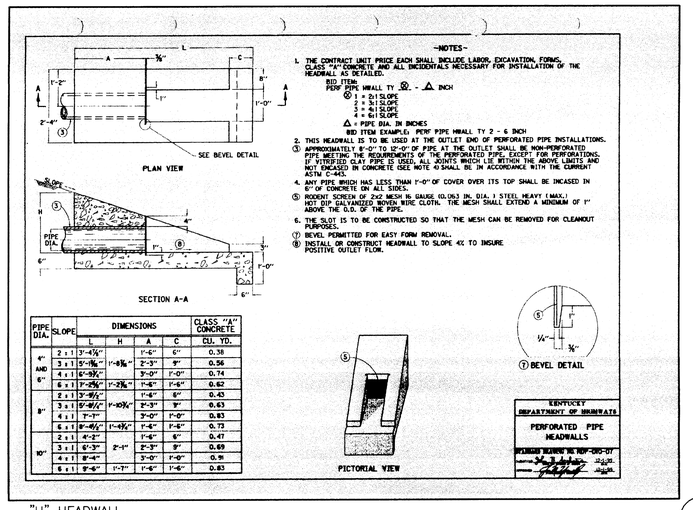

-NOTES-

1. THE CONTRACT UNIT PRICE EACH SHALL INCLUDE LABOR, EXCAVATION, FORMS, CLASS "A" CONCRETE AND ALL INCIDENTALS NECESSARY FOR INSTALLATION OF THE HEADWALL AS DETAILED.
   BID ITEM:
   PERF PIPE HWALL TY Ⓧ - △ INCH
   Ⓧ 1 = 2:1 SLOPE
   2 = 3:1 SLOPE
   3 = 4:1 SLOPE
   4 = 6:1 SLOPE
   △ = PIPE DIA. IN INCHES
   BID ITEM EXAMPLE: PERF PIPE HWALL TY 2 - 6 INCH
2. THIS HEADWALL IS TO BE USED AT THE OUTLET END OF PERFORATED PIPE INSTALLATIONS.
3. APPROXIMATELY 8'-0" TO 12'-0" OF PIPE AT THE OUTLET SHALL BE NON-PERFORATED PIPE MEETING THE REQUIREMENTS OF THE PERFORATED PIPE, EXCEPT FOR PERFORATIONS. IF VITRIFIED CLAY PIPE IS USED, ALL JOINTS WHICH LIE WITHIN THE ABOVE LIMITS AND NOT ENCASED IN CONCRETE (SEE NOTE 4) SHALL BE IN ACCORDANCE WITH THE CURRENT ASTM C-443.
4. ANY PIPE WHICH HAS LESS THAN 1'-0" OF COVER OVER ITS TOP SHALL BE INCASED IN 6" OF CONCRETE ON ALL SIDES.
5. RODENT SCREEN OF 2x2 MESH 16 GAUGE (0.063 IN. DIA.) STEEL HEAVY (MAX.) HOT DIP GALVANIZED WOVEN WIRE CLOTH. THE MESH SHALL EXTEND A MINIMUM OF 1" ABOVE THE O.D. OF THE PIPE.
6. THE SLOT IS TO BE CONSTRUCTED SO THAT THE MESH CAN BE REMOVED FOR CLEANOUT PURPOSES.
7. BEVEL PERMITTED FOR EASY FORM REMOVAL.
8. INSTALL OR CONSTRUCT HEADWALL TO SLOPE 4% TO INSURE POSITIVE OUTLET FLOW.

PIPE DIA.	SLOPE	DIMENSIONS L	H	A	C	CLASS "A" CONCRETE CU. YD.
4" AND 6"	2 : 1	3'-4½"	1'-8⅜"	1'-6"	6"	0.38
	3 : 1	5'-1⅝"		2'-3"	9"	0.56
	4 : 1	6'-10½"		3'-0"	1'-0"	0.74
	6 : 1	7'-2⅝"	1'-2⅞"	1'-6"	1'-6"	0.62
8"	2 : 1	3'-8½"	1'-10¾"	1'-6"	6"	0.43
	3 : 1	5'-8½"		2'-3"	9"	0.63
	4 : 1	7'-1"		3'-0"	1'-0"	0.83
	6 : 1	8'-6½"	1'-4¼"	1'-6"	1'-6"	0.73
10"	2 : 1	4'-2"	2'-1"	1'-6"	6"	0.47
	3 : 1	6'-3"		2'-3"	9"	0.69
	4 : 1	8'-4"		3'-0"	1'-0"	0.9
	6 : 1	9'-6"	1'-7"	1'-6"	1'-6"	0.83

"U" HEADWALL (F)
N.T.S.

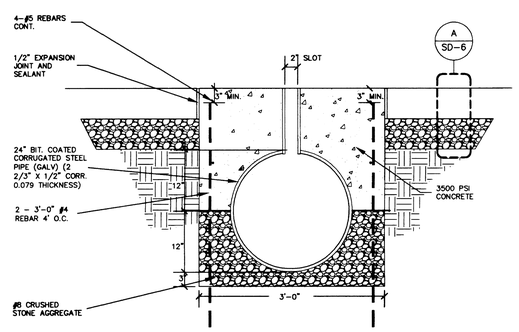

TRENCH DRAIN (G)
1" = 1'-0"

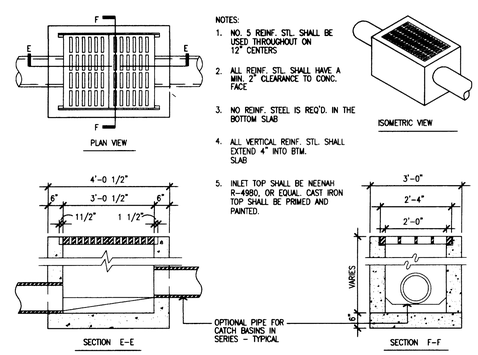

NOTES:
1. NO. 5 REINF. STL. SHALL BE USED THROUGHOUT ON 12" CENTERS
2. ALL REINF. STL. SHALL HAVE A MIN. 2" CLEARANCE TO CONC. FACE
3. NO REINF. STEEL IS REQ'D. IN THE BOTTOM SLAB
4. ALL VERTICAL REINF. STL. SHALL EXTEND 4" INTO BTM. SLAB
5. INLET TOP SHALL BE NEENAH R-4980, OR EQUAL. CAST IRON TOP SHALL BE PRIMED AND PAINTED.

CATCH BASIN (H)
N. T. S.

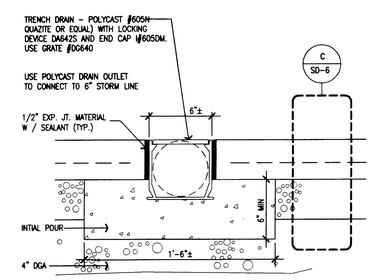

TRENCH DRAIN (J)
N.T.S.

Crisp Building Replacement
Paducah Community College

SITE DETAILS

RECORD DRAWING:SEPTEMBER 23, 2002

Sherman · Carter · Barnhart PSC
PARTNERS IN ARCHITECTURE
2405 HARRODSBURG ROAD · LEXINGTON, KY 40504 · PH: 859-224-1351 · FAX: 859-224-8446

JOB NO.	0044
DATE	FEBRUARY 01, 2001
DRAWN	JBS, DCL, CAH
CHECKED	BKL, JDC

COPYRIGHT © 2001 SHERMAN / CARTER / BARNHART, PSC

REVISIONS △

SHEET
SD-7

Cabinet Slot Document #
174 A-1 23144

Paducah Community College - Crisp
X:\Projects\2000\0044\pla\0044SD7.dwg
Dwg. & Time: Oct 08, 2002 - 10:08am
Login Name: dacchman