TYPICAL POWER LINE INTERCONNECTIONS

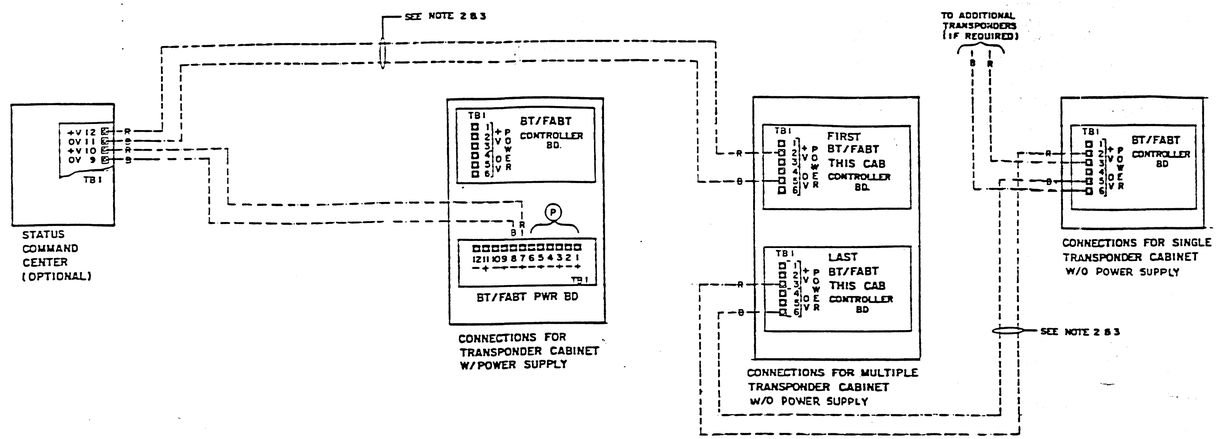

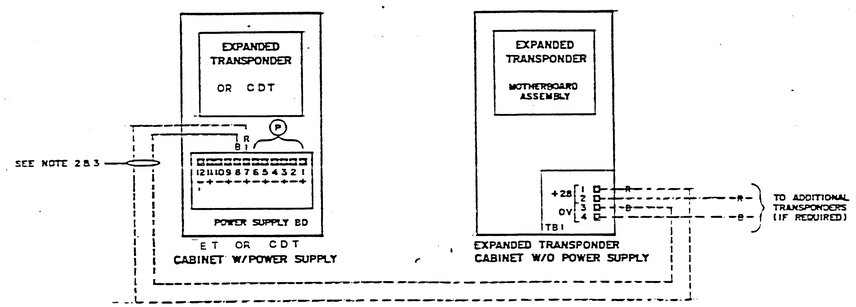

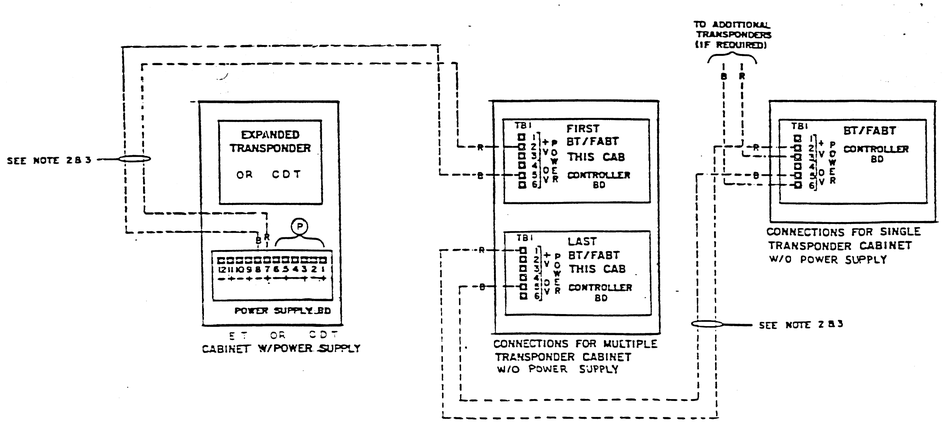

OPTIONAL POWER LINE INTERCONNECTIONS

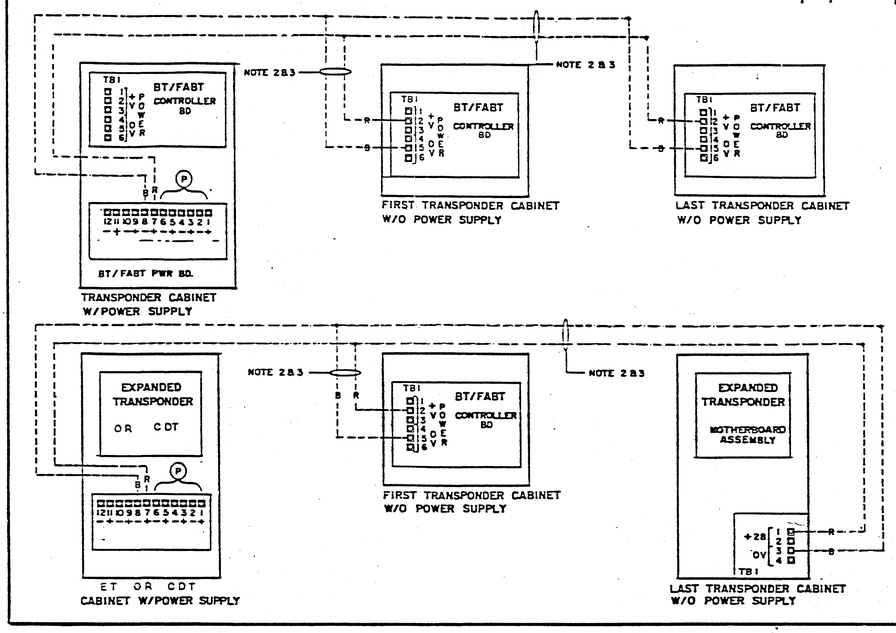

NOTES:

1. DASHED LINES INDICATE CONTRACTOR WIRING
2. POWER LINES 12 AWG MAX. B=BLACK, R=RED
3. MAXIMUM ALLOWABLE VOLTAGE DROP BETWEEN TRANSPONDER CABINET WITH POWER SUPPLY AND LAST TRANSPONDER CABINET WITHOUT POWER SUPPLY IS 1.5 VDC
4. STANDBY BATTERIES, FAST CHARGE 3.0A TRICKLE CHARGE 200ma BATTERY TYPE: 8 AH, 18 AH, 33 AH

(N) NO CONTRACTOR CONNECTIONS

(P) TYPICAL POWER LINES CONNECTION TO ADDITIONAL TRANSPONDERS SHOWN

FIRE ALARM EQUIPMENT CHART

PRODUCT I.D.	FAP. No.	MOUNTED IN 2120 CABINET No.	MOUNTED IN 2001 CABINET No.	WIRING DIAGRAM

REFER TO 900-036 FOR 2120 FIELD WIRING SPECIFICATIONS

CHANNEL 1

CABINET NUMBER	TRANSPONDER NUMBER(S)	WIRING DIAGRAM	POWER LINE INTERCONNECTION FROM CAB	POWER LINE INTERCONNECTION TO CAB
1(E-MUX)	1	2947-503		
2	2,3	-504		
3	4	-505		
4(SCC)	5	-506		

CHANNEL 2

CABINET NUMBER	TRANSPONDER NUMBER(S)	WIRING DIAGRAM	POWER LINE INTERCONNECTION FROM CAB	POWER LINE INTERCONNECTION TO CAB

ORDER No. 783349

FILE No. M962610A

Simplex Time Recorder Co. Gardner, Mass. 01440 U.S.A.

CAUTION: DO NOT CONNECT POWER UNTIL SYSTEM HAS BEEN CHECKED BY A SIMPLEX REPRESENTATIVE.

SYSTEM INTERCONN

DRAFTSMAN DATE

CHECKER DATE

APPROVED J.R. DATE 4/17/86

EQUIP 2120-

DWG. NO. 1984-347

SHEET 1 OF 2

D 1984-347