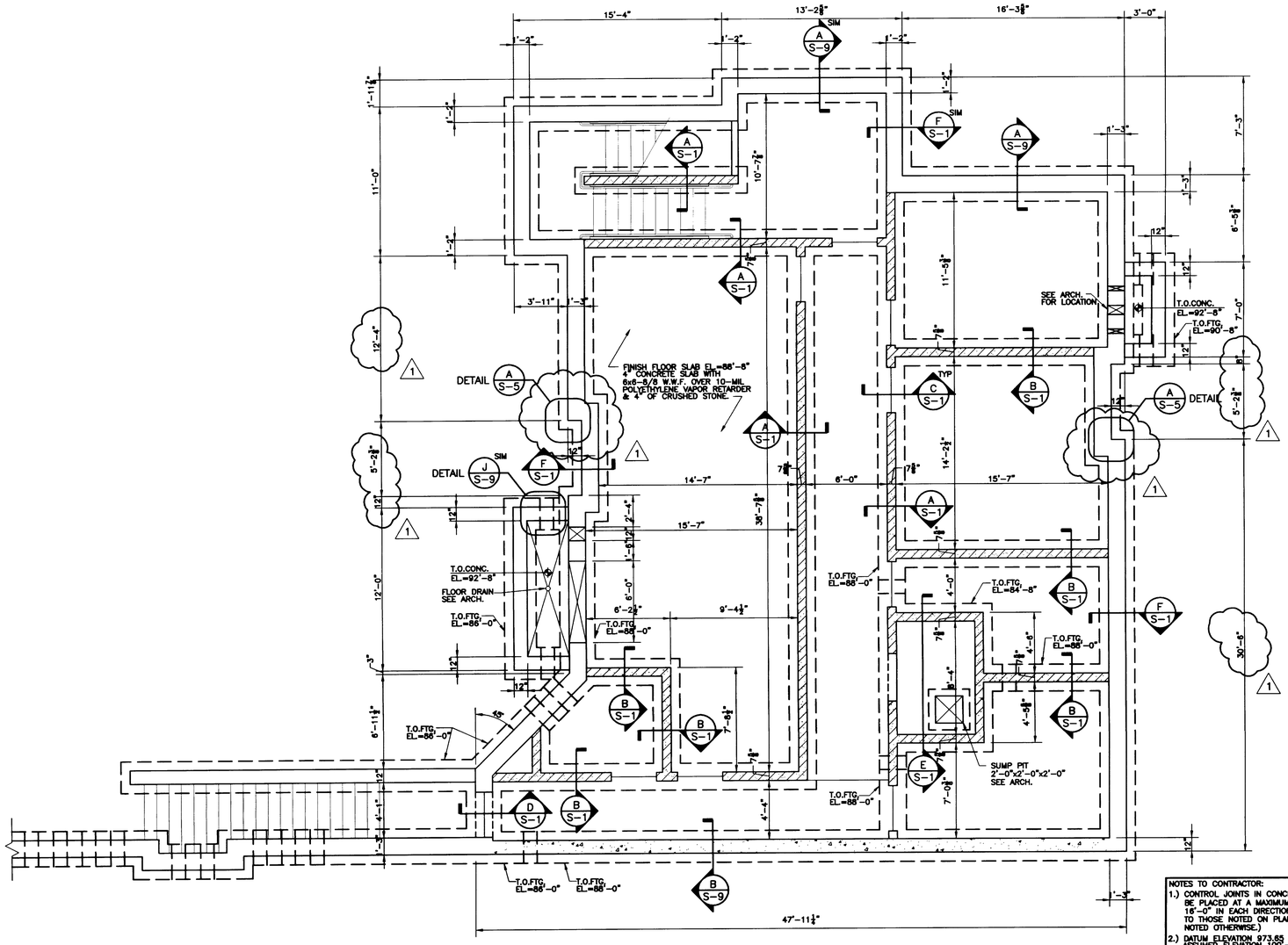

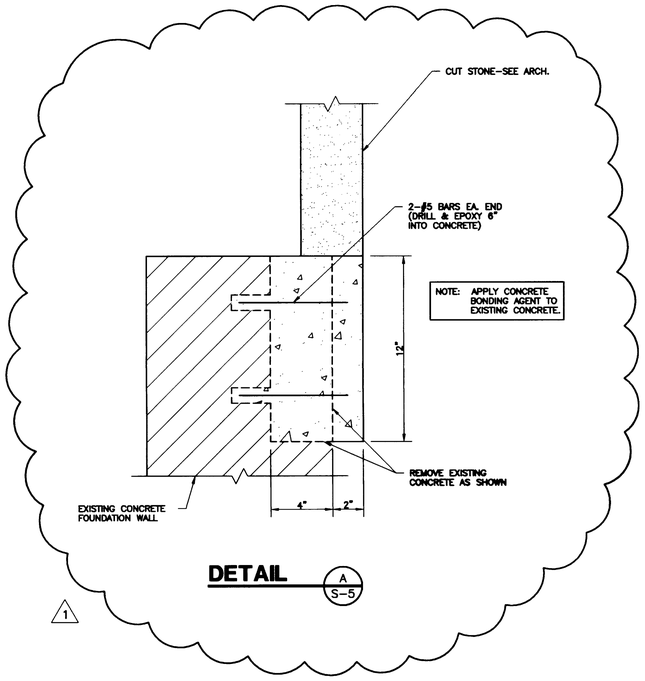

NOTES TO CONTRACTOR:

1.) CONTROL JOINTS IN CONCRETE SLAB SHALL BE PLACED AT A MAXIMUM SPACING OF 16'-0" IN EACH DIRECTION IN ADDITION TO THOSE NOTED ON PLANS (UNLESS NOTED OTHERWISE.)
2.) DATUM ELEVATION 973.65 ft. EQUALS ASSUMED ELEVATION 100'-0"
3.) INTERIOR T.O. FTG EL.=88'-0"(U.N.O.)
4.) EXTERIOR T.O. FTG EL.=88'-0"(U.N.O.)
5.) SEE ARCH. FOR WALL DIMENSIONS NOT SHOWN ON PLAN.
6.) ALL FOOTING EXCAVATIONS SHALL BE PERFORMED ACCORDING TO GEOTECHNICAL REPORT.

BASEMENT FOUNDATION PLAN - BUILDING 0505

These Record Drawings have been prepared based on information provided by others. The Design Professional has not verified the accuracy and/or the completeness of this information and shall not be responsible for any errors or omissions which may be incorporated herein as a result.

FRATERNITY HOUSE REPLACEMENT - PROJECT 1747.0 UNIVERSITY OF KENTUCKY LEXINGTON, KENTUCKY

BASEMENT FOUNDATION PLAN - BUILDING 0505

Job No: P-2252 Omni-4913 Date: Aug.-2000 Drawn By: BCT Checked: CSK Revisions: 1 RECORD DRAWINGS 5-28-02

This Drawing and Design shown thereon are the property of Omni Architects®. The reproduction, copying or other use of this Drawing without the written consent of Omni Architects is prohibited.

POAGE ENGINEERS & ASSOCIATES, INC.
446 EAST MAIN STREET LEXINGTON, KENTUCKY 40507
PHONE: (606) 252-2004 FAX: (606) 252-7750

Omni Architects
Architecture
Landscape Architecture
Civil Engineering
Planning
Interiors
212 North Upper Street
Lexington, KY 40507
(606) 252-6664 Fax: (606) 253-2358

S-5

20985