UNIVERSITY OF KENTUCKY
Purchasing Division

**INVITATION FOR BIDS: CCK-2283-18**

Construct Spline Utilities: Chiller 6 and CUP Building Revisions
Bid Package 8, Trade Category 23V, Chiller #6 Mechanical & Plumbing and
Trade Category 26V, Chiller #6 Electrical
Project #2425.0

**ADDENDUM # 1**

March 28, 2018

**ATTENTION: This is not an order. Read all instructions, terms and conditions carefully.**

**IMPORTANT:**
**BID AND ADDENDUM MUST BE RECEIVED BY 4/13/18 @ 3:00 P.M. LEXINGTON, KY TIME.**

**Bidder must acknowledge receipt of this and any addendum as stated in the Invitation for Bids.**

Bidders shall conform to the following clarifications, corrections and changes, as same shall become binding on the Contract to be issued in response to this Invitation for Bids. Bidders must acknowledge receipt of this Addendum in the space provided on the Form of Proposal. Failure to do so may subject Bidder to disqualification.

1. AEI is reissuing the Issued for Bid and Permit set in its entirety with the Bid Package 8, Addendum 1 change is due to the size of generator transformer. Rework of duct bank, pulling feeders, larger pad and Metering Scope now added for steam Metter, CHW meters and Gas meters.

2. Cover Page, Table of Contents, AEI # 15576-02, Updated Drawing Index and Transmittal dated 3/15/2018 are included for reference.

3. Updated Specifications and Drawings are included with this Addendum #1.

**OFFICIAL APPROVAL**
**UNIVERSITY OF KENTUCKY**

Mike Mudd

Mike Mudd / (859) 257-5409

**SIGNATURE**

_____

_____

Typed or Printed Name

UNIVERSITY OF KENTUCKY

# Purchasing Division

# CAPITAL CONSTRUCTION

Invitation for Bid
CCK-2283-18

Bid Opening Date – 4/13/2018

Construct Spline Utilities: Chiller 6 and CUP Building Revisions, Bid Package #8, Trade Category

23V Chiller #6 Mechanical & Plumbing
26V Chiller #6 Electrical

Project #2425.0

# TABLE OF CONTENTS

**DIVISION 01 – GENERAL CONDITIONS**

**DIVISION 02 – EXISTING CONDITIONS**

02 4119 Selective Demolition *to be added*

**DIVISION 03 – CONCRETE**

03 3000 Cast In Place Concrete

**DIVISION 05 – METALS**

05 1200 Structural Steel

**DIVISION 06-14** - ***not used***

**DIVISION 20 - MECHANICAL**

20 0000 General Mechanical Requirements
20 0513 Motors
20 0520 Excavation and Backfill
20 0529 Mechanical Supporting Devices
20 0553 Mechanical Systems Identification
20 0573 Mechanical Systems Firestopping
20 0700 Mechanical Systems Insulation

**DIVISION 21 -** ***not used***

**DIVISION 22 – PLUMBING**

22 0000 General Plumbing Requirements
22 1118 Water Distribution System
22 1314 Sanitary Waste and Storm Drainage

**DIVISION 23 - HEATING, VENTILATING AND AIR CONDITIONING**

23 0000 General HVAC Requirements
23 0550 Vibration Isolation
23 0594 Water Systems Test Adjust Balance
23 0598 Acceptance Testing of Rotating Equipment
23 0901A Control Systems
23 0993 Control Sequences
23 2116 Pipe and Pipe Fittings
23 2118 Valves
23 2120 Piping Specialties
23 2123 Pumps

23 2514 Chemical Treatment Systems and Final System Fill
23 3114 Ductwork
23 6000 Primary Cooling Equipment * includes Appendix (Chiller 5 Submittal)

## DIVISION 26 – ELECTRICAL

26 0000 General Electrical Requirements
26 0513.16 Medium-Voltage Single-and-Multi-Conductor Cables
26 0516 Owner Furnished Equipment
26 0519 Low-Voltage Electrical Power Conductors and Cables
26 0526 Grounding and Bonding for Electrical Systems
26 0529 Hangers and Supports for Electrical Systems
26 0533 Raceway and Boxes for Electrical Systems
26 0543 Underground Ducts and Raceways for Electrical Systems
26 0553 Electrical Systems Identification
26 0593 Electrical Systems Firestopping
26 0812 Power Distribution Acceptance Tests
26 0813 Power Distribution Acceptance Test Tables
26 1219 Pad-Mounted, Liquid-Filled, Medium-Voltage Transformers
26 2726 Wiring Devices
26 2813 Fuses
26 2816 Enclosed Switches and Circuit Breakers
26 2913 Enclosed Controllers
26 5100 Lighting Systems

## DIVISION 27-28 - *not used*

## DIVISION 31 – EARTHWORK

31 5000 Excavation, Retention, Shoring and Bracing

**END OF TABLE OF CONTENTS**

AEI #15576-02

UK #2425.4 UK RB2 - CUP- CHILLER 6 BID PACKAGE 8

| | | Issue for Permit 2018.01.12 | V2.0 posted 3.15.18 |
|---|---|---|---|
| **STRUCTURAL** | | | |
| S200.8 | FOUNDATION PLAN CUP BUILDING BASEMENT | X | X |
| S201.8 | PARTIAL PLANS CUP BUILDING FIRST FLOOR | X | X |
| **PLUMBING** | | | |
| P000.8 | PLUMBING SYMBOLS AND ABBREVIATIONS | X | X |
| P200.8 | PLUMBING PLAN CUP BUILDING BASEMENT | X | X |
| P400.8 | PLUMBING ENLARGED PLANS | X | X |
| P900.8 | PLUMBING SCHEDULES & DETAILS | X | X |
| **HVAC** | | | |
| H001.8 | HVAC SYMBOLS AND ABBREVIATIONS | X | X |
| H002.8 | HVAC CUP CONTROLS LEGEND AND GENERAL NOTES | X | X |
| H200.8 | HVAC PLAN CUP BUILDING BASEMENT | X | X |
| H201.8 | HVAC PLAN CUP BUILDING FIRST FLOOR | X | X |
| H300.8 | ENLARGED HVAC BASEMENT PLAN | X | X |
| H301.8 | ENLARGED HVAC BOILER LEVEL PLANS | X | X |
| H400.8 | HVAC DETAILS | X | X |
| H401.8 | HVAC DETAILS | X | X |
| H402.8 | HVAC DETAILS | X | X |
| H500.8 | HVAC SCHEDULES | X | X |
| H700.8 | HVAC CHILLED WATER DIAGRAM | X | X |
| H701.8 | HVAC STEAM FLOW DIAGRAM | | X |
| H702.8 | HVAC BOILER BLOWDOWN PIPING DIAGRAM | X | X |
| HD301.8 | ENLARGED HVAC BOILER LEVEL DEMOLITION PLANS | X | X |
| HD702.8 | CUP EXISTING BLOWDOWN DIAGRAM DEMOLITION | X | X |
| **INSTRUMENTATION AND CONTROLS** | | | |
| IC001.8 | CONTROL INSTRUMENTAION SYMBOLS & ABBREVATIONS | X | X |
| IC700.8 | CHILLED WATER CONTROL DIAGRAM CH-6 | X | X |
| IC900.8 | INSTRUMENATION CONTROL SCHEDULE | X | X |
| **ELECTRICAL** | | | |
| E001.8 | ELECTRICAL SYMBOLS AND ABBREVIATIONS | X | X |
| ED201G.8 | ELECTRICAL DEMOLITION PLAN GENERATOR BUILDING | | X |
| E101.8 | ELECTRICAL LIGHTING PLAN CUP BUILDING FIRST FLOOR | X | X |
| E200.8 | ELECTRICAL POWER PLAN CUP BUILDING BASEMENT | X | X |
| E201.8 | ELECTRICAL POWER PLAN CUP BUILDING FIRST FLOOR | X | X |
| E201G.8 | ELECTRICAL POWER PLAN GENERATOR BUILDING | | X |
| E400.8 | ELECTRICAL DETAILS | X | X |

| | | | |
|---|---|---|---|
| E500.8 | ELECTRICAL SECTIONS | | X |
| E700.8 | ELECTRICAL SINGLE LINE DIAGRAM | X | X |
| SHEET COUNT | | 29 | 33 |

# Transmittal

DATE: 3/15/2018
TRANSMITTAL ID: 00657

DESCRIPTION OF CONTENTS

| QTY | DATED | TITLE | NOTES |
|---|---|---|---|
| 1 | 3/13/2018 | H701.8-STEAM FLOW DIAGRAM.pdf | |
| 1 | 1/12/2018 | IC001.8 - CONTROL INSTRUMENTATION SYMBOLS & ABBREVIATIONS.pdf | |
| 1 | 1/12/2018 | HD702.8-CUP EXISTING BLOWDOWN DIAGRAM DEMOLITION.pdf | |
| 1 | 1/11/2018 | 26 0553 Electrical Systems Identification.pdf | |
| 1 | 1/12/2018 | P000.8-PLUMBING SYMBOLS AND ABBREVIATIONS.pdf | |
| 1 | 3/13/2018 | H700.8-HVAC CHILLED WATER DIAGRAM.pdf | |
| 1 | 1/11/2018 | 26 0519 Low-Voltage Electrical Power Conductors and Cables.pdf | |
| 1 | 1/12/2018 | H300.8-ENLARGED HVAC BASEMENT PLAN.pdf | |
| 1 | 1/11/2018 | 23 2120 Piping Specialties.pdf | |
| 1 | 1/12/2018 | H200.8-HVAC CUP BUILDING BASEMENT.pdf | |
| 1 | 3/15/2018 | UK CUP BP 8 Drawing List_3.15.18.xlsx | |
| 1 | 3/15/2018 | 26 0543 Underground Ducts and Raceways for Electrical Systems.pdf | |
| 1 | 1/12/2018 | H002.8-HVAC CUP CONTROLS LEGEND AND GENERAL NOTES.pdf | |
| 1 | 1/11/2018 | 26 0533 Raceway and Boxes for Electrical Systems.pdf | |
| 1 | 3/15/2018 | E201G.8 - ELECTRICAL POWER PLAN GENERATOR BUILDING.pdf | |
| 1 | 1/11/2018 | 26 2816 Enclosed Switches and Circuit Breakers.pdf | |
| 1 | 1/12/2018 | H401.8-HVAC DETAILS.pdf | |
| 1 | 3/15/2018 | 26 0516 Owner-Furnished Equipment.pdf | |
| 1 | 1/11/2018 | 23 0598 Acceptance Testing of Rotating Equipment.pdf | |
| 1 | 1/11/2018 | 20 0529 Mechanical Supporting Devices.pdf | |
| 1 | 3/15/2018 | E400.8 - ELECTRICAL DETAILS.pdf | |
| 1 | 1/11/2018 | 26 0526 Grounding and Bonding for Electrical Systems.pdf | |
| 1 | 1/11/2018 | 26 0813 Power Distribution Acceptance Test Tables.pdf | |
| 1 | 3/15/2018 | 26 0812 Power Distribution Acceptance Tests.pdf | |
| 1 | 1/11/2018 | 20 0700 Mechanical Systems Insulation.pdf | |
| 1 | 1/12/2018 | H500.8-HVAC SCHEDULES.pdf | |
| 1 | 3/15/2018 | Table of Contents- BP8.doc | |
| 1 | 1/12/2018 | 22 00 00 General Plumbing Requirements.pdf | |
| 1 | 1/12/2018 | P900.8-PLUMBING SCHEDULES & DETAILS.pdf | |
| 1 | 1/12/2018 | S200.8 - FOUNDATION PLAN CUP BUILDING BASEMENT Stamped.pdf | |

# Transmittal

DATE: 3/15/2018
TRANSMITTAL ID: 00657

| QTY | DATED | TITLE | NOTES |
|---|---|---|---|
| 1 | 3/15/2018 | E201.8 - ELECTRICAL POWER PLAN CUP BUILDING FIRST FLOOR.pdf | |
| 1 | 3/15/2018 | E700.8 - ELECTRICAL SINGLE LINE DIAGRAM.pdf | |
| 1 | 1/11/2018 | 23 3114 Ductwork.pdf | |
| 1 | 1/11/2018 | 20 0573 Mechanical Systems Firestopping.pdf | |
| 1 | 1/11/2018 | 26 2813 Fuses.pdf | |
| 1 | 1/12/2018 | H301.8-ENLARGED HVAC BOILER LEVEL PLANS.pdf | |
| 1 | 1/11/2018 | 26 0593 Electrical Systems Firestopping.pdf | |
| 1 | 3/15/2018 | E500.8 - ELECTRICAL SECTIONS.pdf | |
| 1 | 3/14/2018 | H201.8- HVAC CUP BUILDING FIRST FLOOR.pdf | |
| 1 | 1/11/2018 | 31 5000 Excavation Retention, Shoring and Bracing.pdf | |
| 1 | 3/15/2018 | ED201G.8 - ELECTRICAL DEMOLITION PLAN GENERATOR BUILDING.pdf | |
| 1 | 1/11/2018 | 20 0513 Motors.pdf | |
| 1 | 1/12/2018 | H001.8-HVAC SYMBOLS AND ABBREVIATIONS.pdf | |
| 1 | 1/11/2018 | 23 0000 General HVAC Requirements.pdf | |
| 1 | 1/11/2018 | 26 5100 Lighting Systems.pdf | |
| 1 | 3/15/2018 | IC900.8 - BP-8 - INSTRUMENTATION CONTROL SCHEDULE.pdf | |
| 1 | 1/12/2018 | 05 1200 Structural Steel.pdf | |
| 1 | 1/12/2018 | H402.8-HVAC DETAILS.pdf | |
| 1 | 1/11/2018 | 26 2913 Enclosed Controllers.pdf | |
| 1 | 1/11/2018 | 23 2116 Pipe and Pipe Fittings.pdf | |
| 1 | 1/12/2018 | P200.8-PLUMBING PLAN CUP BUILDING BASEMENT.pdf | |
| 1 | 1/12/2018 | P400.8-PLUMBING ENLARGED PLANS.pdf | |
| 1 | 1/12/2018 | HD301.8-ENLARGED HVAC BOILER LEVEL DEMOLITION PLANS.pdf | |
| 1 | 1/11/2018 | 23 0594 Water Systems Test Adjust Balance.pdf | |
| 1 | 1/12/2018 | 22 1314 Sanitary Waste and Storm Drainage Systems.pdf | |
| 1 | 1/12/2018 | S201.8 - PARTIAL PLANS CUP BUILDING FIRST FLOOR Stamped.pdf | |
| 1 | 1/11/2018 | 26 2726 Wiring Devices.pdf | |
| 1 | 1/11/2018 | 26 0513.16 Medium-Voltage Single-and-Multi-Conductor Cables.pdf | |
| 1 | 1/11/2018 | 26 0529 Hangers and Supports for Electrical Systems.pdf | |
| 1 | 1/11/2018 | 23 0550 Vibration Isolation.pdf | |
| 1 | 3/15/2018 | 23 0901A Control Systems.pdf | |

# Transmittal

DATE: 3/15/2018
TRANSMITTAL ID: 00657

| QTY | DATED | TITLE | NOTES |
|---|---|---|---|
| 1 | 1/11/2018 | 23 2514 Chemical Treatment Systems and Final System Fill.pdf | |
| 1 | 1/11/2018 | 23 2123 Pumps.pdf | |
| 1 | 1/11/2018 | 20 0000 General Mechanical Requirements.pdf | |
| 1 | 1/12/2018 | H702.8-HVAC BOILER BLOWDOWN PIPING DIAGRAM.pdf | |
| 1 | 1/12/2018 | 22 11 18 Water Distribution System.pdf | |
| 1 | 1/12/2018 | H400.8-HVAC DETAILS.pdf | |
| 1 | 1/12/2018 | IC700.8 -CHILLED WATER CONTROL DIAGRAM CH-6.pdf | |
| 1 | 1/12/2018 | 20 0520 Excavation and Backfill.pdf | |
| 1 | 3/15/2018 | E001.8 - ELECTRICAL SYMBOLS AND ABBREVIATIONS.pdf | |
| 1 | 1/11/2018 | 26 0000 General Electrical Requirements.pdf | |
| 1 | 1/11/2018 | 20 0553 Mechanical Systems Identification.pdf | |
| 1 | 1/11/2018 | 03 3000 Cast-in-Place Concrete.pdf | |
| 1 | 3/15/2018 | E101.8 - ELECTRICAL LIGHTING PLAN CUP BUILDING FIRST FLOOR.pdf | |
| 1 | 3/15/2018 | 26 1219 Pad-Mounted, Liquid-Filled, Medium-Voltage Transformers.pdf | |
| 1 | 3/15/2018 | E200.8 - ELECTRICAL POWER PLAN CUP BUILDING BASEMENT.pdf | |
| 1 | 1/11/2018 | 23 6000 Primary Cooling Equipment_incl Appendix.pdf | |
| 1 | 3/15/2018 | 23 0993 Control Sequences.pdf | |
| 1 | 1/11/2018 | 23 2118 Valves.pdf | |

# SECTION 03 3000 - CAST-IN-PLACE CONCRETE

## PART 1 - GENERAL

### 1.1 RELATED DOCUMENTS

A. Drawings and general provisions of the Contract, including General and Supplementary Conditions and Division 01 Specification Sections, apply to this Section.

### 1.2 SUMMARY

A. Section Includes: All labor, materials, equipment, special tools and services to complete cast-in-place concrete work required for the Project, as herein specified, and as indicated on the Drawings.

B. Related Sections:

1. Section 05 1200 – Structural Steel.
2. Section 31 5000 – Excavation Retention, Shoring and Bracing
3. Divisions 21 through 26 – Pads, inserts, sleeves and embedments for mechanical and electrical items specified therein.

### 1.3 REFERENCES

A. Note: A copy of each reference shall be kept in the field office at the site at all times. The reference standards shall govern the work except as modified herein.

B. American Concrete Institute (ACI) 301-16 Specifications for Structural Concrete is hereby incorporated as part of this Section. Supplemental requirements and modifications listed herein take precedence over the requirements of ACI 301. All ACI 301 items unless modified by the Contract Documents are incorporated as written. When any part of any item is modified or voided, the unaltered provisions of the part shall apply as written.

C. ACI 305.1-06 Specification for Hot Weather Concreting.

D. ACI 306.1-90 Standard Specification for Cold Weather Concreting.

E. The ACI MNL-15 (16) Field Reference Manual.

F. Other ACI references as noted in this Section.

G. American Association of State Highway and Transportation Officials (AASHTO) Specifications as noted in this Section.

H. ASTM International (ASTM) Specifications as noted in this Section.

I. Concrete Reinforcing Steel Institute (CRSI) Manual of Standard Practice, 28th Edition.

J. National Ready Mixed Concrete Association (NRMCA) Quality Control Manual.

### 1.4 SUBMITTALS

A. General.

1. Shop drawings shall be produced by the Contractor and submitted to the Architect/Engineer for review. The Architect/Engineer will endeavor to complete review of a

shop drawing submittal within 14 days of receipt of the submittal. Fabrication of material prior to the receipt of approved shop drawings for that material shall be at the Contractor's risk.

2. The Contractor is responsible to furnish field-verify information, coordinate material requirements, and review shop drawings prior to submittal of shop drawings to the Architect/Engineer. Receipt of shop drawings by Architect/Engineer will be an assumption by Architect/Engineer that this has been done.
3. Notations by the Architect/Engineer made on the shop drawings do not authorize additional compensation for the Contractor.
4. The Contract Documents (Drawings and Specifications) govern all concrete work. Errors on shop drawings or discrepancies between shop drawings and Contract Documents shall be governed by the Contract Documents. Even if shop drawings contain errors after review by the Architect/Engineer, no additional compensation is due Contractor to correct work to what is shown on Contract Documents.
5. Architectural and mechanical drawings supplement the structural drawings. Requirements for concrete work may be shown on architectural and mechanical drawings.
6. The Architect's and Engineer’s review of details and construction operations shall not relieve the Contractor of responsibility to successfully complete the work in accordance with these Specifications and within the Contract time.

B. Submit mix designs and test results conforming to the requirements of Section 4 of ACI 301. Submit request for approval to use admixtures, if any. A complete mix design submittal must be furnished at least three weeks prior to the planned use of that mix.

1. The submitted mix designs shall address weather conditions that are expected to occur during the concrete construction phase. Concrete mixes shall not only be designed for average temperature and humidity conditions, but also for adverse conditions (hot and cold weather), as applicable to this project.

C. Submit letter stating that concrete subcontractors and suppliers are familiar with the reference standards.

D. Submit a Quality Control Plan in accordance with Section 1 of ACI 301.

E. Submit reinforcing steel shop drawings in accordance with Section 3 of ACI 301.

F. Submit procedures and records required in hot and cold weather concreting work.

G. Submit the following certifications:

1. All coating, floor covering and surface treatment manufacturer's approvals (in writing) of concrete curing compounds that are not removed prior to the product’s installation.
2. Subsequent treatment manufacturers' approvals (in writing) of form release agent.

H. The following submittals shall be provided in accordance with ACI 301 and Division 01 - General Requirements.

1. Field and Laboratory tests that are the Contractor’s responsibility.
2. Data and test documentation on proposed materials including but not limited to:
    a. Cement.
    b. Aggregates.
    c. Admixtures.
    d. Reinforcing.
    e. Curing materials.
    f. Related materials for concrete construction specified herein.
    g. Material for repair of surface defects if other than site-mixed portland-cement mortar.
3. Construction joints not shown on the drawings.
4. Method of developing bond at joints.

5. Method of adding admixtures.
6. Procedure for adding water to ready-mixed concrete at site, including method of measuring water.
7. Method(s) for preserving moisture in the concrete.
8. Ready-mixed concrete delivery tickets.

I. Submit Certificate of Conformance for concrete production facilities by NRMCA.

## 1.5 QUALITY ASSURANCE

A. Regulatory requirements:

1. Comply with applicable laws, ordinances, and the Kentucky Building Code (KBC).
2. Comply with the referenced ACI publications, as modified and supplemented in this Section.

B. Tests and inspections:

1. The Owner will employ a Geotechnical Engineer to inspect and approve foundation bearings and backfill compaction. Do not place concrete until subgrade approvals have been obtained.
2. The Owner will employ a testing and inspection agency to provide the services specified in Section 1.6.3 of ACI 301, including supplemental requirements defined in Article 1.7 of this Specification.
3. The Contractor shall select an independent testing agency, subject to the Architect/Engineer's approval, to perform all testing required by the Contractor for qualification of proposed materials, the establishment of mix designs, and all other testing services needed or required by the Contractor.

C. Flatwork finishers certification:

1. All flatwork finishers must be ACI Concrete Flatwork Technician certified.
2. The on-site flatwork supervisor must be ACI Concrete Flatwork Finisher and Technician certified.

D. Ready-Mixed Plant Certification:

1. All ready-mixed concrete production facilities shall be certified by the NRMCA Program for Certification of Ready-Mixed Concrete Production Facilities.

E. Preconstruction Meeting:

1. A preconstruction meeting shall be arranged by the Contractor to review concrete pre-placement and placement activities, inspection and testing requirements, formed and unformed concrete finishes, hot and cold weather concreting procedures, form removal, and critical tolerances.
2. Ready-mix supplier, Contractor, concrete finishers, Construction Manager, Owner's concrete testing agency, and Owner's representative shall attend.

## 1.6 DELIVERY, STORAGE AND HANDLING

A. Deliver reinforcement to the project site bundled, tagged and marked. Use durable tags indicating bar size, lengths, etc., and other information corresponding to markings shown on placing drawings.

B. All reinforcement at the site shall be stored off the ground and protected from damage, accumulation of dirt and excessive rust.

C. All formwork at the site shall be stored in a clean, dry location off the ground, covered and protected from damage and accumulation of dirt, etc.

## 1.7 SUPPLEMENTAL REQUIREMENTS AND MODIFICATIONS TO ACI 301-16

A. The following statements modify and supplement ACI 301. All unaltered parts of ACI 301 shall apply as written.

B. The Section and paragraph numbers correspond to those in ACI 301. Note that each technical section of ACI 301 includes General requirements, Products, and Execution per the Three-Part Section Format of the Construction Specification Institute.

Section 1 (ACI 301) - General Requirements

1.5.3.1 The Contractor shall submit a quality control plan that addresses the following.

(a) Control and maintenance of project documents.
(b) Subcontractor/supplier services and verification of purchased products and materials.
(c) Concrete production inspection and testing.
(d) Pre-placement inspection including formwork, reinforcing and embedments.
(e) Placement inspection including consolidation, finishing and initial curing of concrete.
(f) Post-placement inspection including monitoring of moist curing, curing temperatures, and protection of exposed surfaces.

1.6.2.2(c) The Contractor is required to arrange for all testing, giving the Owner's testing agency at least 24 hours advance notice.

1.6.2.2(d)1 The Contractor shall provide curing boxes as required by ASTM C 31. Coordinate quantity and location with the Construction Manager and Testing Agency.

1.6.3.1(c) The Owner's testing agency shall report in writing all test results to Architect/Engineer, Contractor, Construction Manager and concrete supplier within three (3) working days after the tests are performed. Report by phone or email the results of early break cylinders to Contractor and Construction Manager. Reports of strength tests shall contain the name of the project, date and time of placement, location of placement, placement method, water added at site, sample location, weather conditions, batch ticket number, batch size, mix identification, specified strength, breaking strength and type of break, specimen diameter and weight, types of admixtures, percentage of entrained air, slump, concrete temperature, and detailed information of storage and curing of specimens before testing.

1.6.3.2(d)1 Unless noted otherwise concrete shall have at least one strength test for each 150 cubic yards, or fraction thereof, placed in any one day.

1.6.3.2(d)2 Determine the slump (ASTM C 143) for each batch of concrete that high-range water-reducer (superplasticizer) is added to in the field. Test and report slump both before and after superplasticizer is added.

1.6.3.2(e)1 When 6 by 12 in. cylinders are used make four test specimens for each sample. When 4 by 8 in. cylinders are used make five test specimens for each sample. One specimen shall be a hold specimen, to be tested only if a defective specimen is found.

1.6.3.2(e)2 Age of concrete for acceptance shall be 28 days.

1.6.3.2(f) Air content tests shall be conducted on each batches of all mixes in which air entrainment is specified. Concrete that does not satisfy air entrainment requirements shall be rejected.

1.6.3.2(g) Testing services provide the basis for acceptance or rejection of concrete furnished by this contract. Therefore, it is necessary that testing for air content and slump not only be done after all adjustments have been made, but before the concrete is discharged.

1.6.3.3(f) The Owner will employ an inspection agency to visually inspect the placement of reinforcing steel. Reference KBC 1704.4. Do not place concrete until all outstanding issues cited in the inspection reports have been corrected. Inspection of reinforcing steel to include, but not limited to:

1. Size, spacing, and quantity of bars.
2. Bar splices.
3. Embedments.
4. Concrete cover.
5. Support and securement.

1.6.3.3(g) The Owner will employ an inspection agency to inspect concrete operations including, but not limited to:

1. Use of proper concrete mix.
2. Consolidation.
3. Finish and finishing operations.

1.6.4.1(a) Contractor shall be responsible for costs of tests on hardened concrete performed by Owner's testing agency if the tests are required to verify the strength or air content of the concrete because representative concrete cylinder tests or air content tests failed to meet acceptance criteria. Owner will be responsible for costs of tests on hardened concrete performed by Owner's testing agency if the tests are at the Owner's request and representative concrete cylinder and air content tests meet acceptance criteria.

1.6.8.4 Concrete which fails to meet the requirements of this Specification shall be rejected.

1.7.1.6 The Contractor shall bear all costs of correcting rejected work, including the cost of the Architect's and Engineer's additional services thereby made necessary.

Section 2 (ACI 301) - Formwork and Formwork Accessories

2.2.1.3 Form release agent shall be a commercial formulation form coating compound that will not bond with, stain, or adversely affect concrete surfaces and will not impair subsequent treatments of concrete surfaces. The form release agent manufacturer shall certify that the form release agent is chemically and physically compatible with all subsequent treatments of concrete surfaces. Furthermore, the form release agent shall be approved in writing by the manufacturers of all subsequent treatments.

2.2.1.4 Preformed Expansion Joint Filler: Non-impregnated type, closed cell resilient polyethylene foam, 1/2 in. thick unless otherwise noted on the Drawings.

2.2.1.5(a) Embedded items shall not be made of aluminum.

2.2.2.1 Design and engineering of formwork shall be the responsibility of the Contractor.

2.2.2.3 Earth cuts may be used for vertical forms for concrete below ground where the ground stands vertical and is approved by the Owner's testing agency prior to placement of concrete.

2.3.1.2(a) Exposed edges of columns, walls, slabs and beams shall have 3/4 in. bevels, unless otherwise noted.

2.3.1.5(a) Concrete construction tolerances shall be in accordance with ACI 117.

2.3.1.5(b) A preconstruction meeting shall be arranged by the Contractor for the purpose of reviewing critical tolerances, methods of making measurements, and the basis for acceptance or rejection of completed work to avoid misunderstandings at the time of final acceptance.

2.3.1.6(a) If required, retighten forms and bracing after concrete placement, but before concrete has taken its initial set, to eliminate mortar leaks and maintain proper alignment.

2.3.1.12(a) All sleeves, inserts and embedded items required by mechanical trades shall be furnished and placed by the appropriate mechanical contractor. All other sleeves, inserts, anchors and embedded items shall be furnished by the appropriate supplier and placed by the Contractor performing the work of this Section.

2.3.1.12(b) Sleeves, inserts, anchors and embedded items not shown on structural drawings must be approved by Architect/Engineer before placement of concrete.

2.3.1.14(a) Remove chips, wood, sawdust, dirt and debris just before concrete is placed.

2.3.1.18 Provisions for Other Trades: Provide openings in concrete and concrete formwork to accommodate work of other trades. Determine size and location of openings, recesses and chases from trades providing such items. Accurately place and securely support items built into forms. Size and location of openings, recesses and chases must be approved by Architect/Engineer before placement of concrete.

Section 3 (ACI 301) - Reinforcement and Reinforcement Supports

3.1.3.1(a) Protect reinforcement surfaces from contact with soil, oil, formwork release agent, or other materials that decrease bond to concrete.

3.2.1.1(a) All reinforcing steel shall have a minimum Fy of 60 ksi.

3.2.1.7(a)1 Welded wire reinforcement shall be in accordance with ASTM A 185 (smooth wire) unless noted otherwise on the Drawings. Furnish in flat sheets.

3.2.2.2(a)1 Welding of reinforcing steel and welded wire reinforcement is not permitted without the approval of the Architect/Engineer.

3.3.2.8(e) Bending of reinforcing steel partially embedded in concrete is not permitted, unless otherwise detailed on the Contract Documents.

3.3.2.11 Placement of bars shall also be in accordance with the detailed recommendations given in the Concrete Reinforcing Steel Institute's "Placing Reinforcing Bars", 9th Edition.

Section 4 (ACI 301) - Concrete Mixtures

4.1.1.1 The ready-mix concrete producer is completely and solely responsible for the design, production, and delivery of the concrete mixes to satisfy this Specification. The Contractor shall coordinate the review of the mix designs between the Ready-Mix Producer, Forming Contractor, and Placing/Finishing Contractor. The Contractor is responsible for informing the Ready-Mix Producer of the conditions at the job site, such as methods being used for placing concrete. Adjustments required to facilitate placing and achieve the desired results shall fall within the criteria of this Specification and shall be at no additional cost to the Owner. All mix designs and proposed adjustments to the same shall be submitted to the Architect/Engineer for review.

4.2.1.1(a)1 Cement for all concrete shall be ASTM C 150, Type I or Type II unless otherwise noted. Air-entrained cement shall not be used. Air requirements shall be met by use of separate admixtures

4.2.1.1(d)1 Class C and Class F fly ashes shall comply with ASTM C 618, except that in addition to the requirements of ASTM C 618, Type F fly ash shall have a maximum Loss on Ignition of 3%, with a maximum variation of 1%. Contractor's mix design submittal for mixes which include fly ash must be accompanied by complete chemical and physical analyses and quality control records for the proposed fly ash source for at least two years immediately prior to the proposed use on this project.

4.2.1.1(d)2 When fly ash is used, the ratio of fly ash to total cementitious materials shall be not less than 15% and no greater than 25%.

4.2.1.1(e)1 Ground granulated blast-furnace slag shall be Grade 100 or Grade 120 per ASTM C 989.

4.2.1.1(e)2 When ground granulated blast-furnace slag is used, the maximum amount shall be limited to 40% by weight of the total cementitious materials.

4.2.1.2(a) All normal weight aggregates shall be graded, a mix of fine, intermediate, and coarse aggregates, and shall also conform to Kentucky Department of Transportation (KDOT) 703.02 as required for superstructures.

1. Aggregate certification submittal shall include copies of test reports on the fine, intermediate, and coarse aggregates proposed to be used, made by a testing laboratory acceptable to the Architect/Engineer, showing source of the materials and conformance with specification requirements. Date of test shall not be more than six months prior to date of submittal. Contractor shall furnish similar copies, of current date, when there is a change in source of material and at any time upon demand by the Architect/Engineer.

4.2.1.3(a) Concrete mixer washout water shall not be used in any concrete except Backfill Concrete.

4.2.1.4.2(a) Calcium chloride, or admixtures containing more than .05% calcium chloride ions are not permitted. Written conformance to this requirement and the chloride content is required from the admixture manufacturer prior to mix design review.

4.2.1.4.3 High-range water-reducing admixture (superplasticizer) conforming to ASTM C 494, Type F or G shall be used in all concrete with a specified maximum water-cementitious materials ratio below 0.42. The admixture may also be used at

Contractor's option in other mixes, with the written approval of the Architect/Engineer, at no additional cost to the owner.

4.2.1.4.4 Water-reducing, non-chloride, non-corrosive, accelerating admixture conforming to ASTM C 494, Type C or E, shall be used when early initial set is required. The admixture must have non-corrosive test data of a year's duration from an independent testing laboratory using an acceptable, accelerated corrosion test method such as that using electrical potential measures.

4.2.1.4.5 Water-reducing, retarding admixture conforming to ASTM C 494, Type D shall be used when delay of the setting time for concrete is required.

4.2.1.4.6 Extended set-control admixtures, if used shall be added to the concrete during or immediately after the batching process. The dosage rate for each Mix Type shall be pre-determined by trial mixtures in which the admixture is added to a minimum 8 cu. yd. batch.

4.2.1.4.7 All admixtures shall be approved by the cement manufacturer.

4.2.1.6(a) Materials used for concrete shall be furnished from the same source throughout the project unless otherwise approved by the Architect/Engineer.

4.2.2.2(a) Slump – Concrete shall be produced to have a maximum slump at the point of placement of 4 inches with a tolerance of one inch. This maximum slump may not be exceeded except by the job site addition of high-range water-reducer (superplasticizer).

1. When superplasticizer is used, the maximum pre-adjusted slump shall be 4", and the maximum superplasticized slump shall be 8".

4.2.2.4(c)1 For pumped concrete, air content shall be periodically tested at both the truck discharge and end of hose. The required air content for acceptance at the truck discharge shall be adjusted, if necessary, to account for loss of air content during pumping.

4.2.2.4(d)1 Tolerance on air content for slabs that receive a trowel finish shall be +0.5%, -1.5%.

4.2.2.5(b) Maximum concrete temperature at time of discharge shall not exceed 95 °F. If necessary, use nitrogen cooling to maintain concrete temperature.

4.2.2.7(d)1 Chloride ion concentration - Maximum water-soluble chloride ion concentrations in hardened concrete at an age of 28 to 42 days contributed from all ingredients, including water, aggregates, cementitious materials and admixtures shall not exceed the limits indicated in Table 4.2.2.8(b). Immediately after receipt of contract, Contractor shall test proposed individual concrete ingredients for total chloride ion content. If the total chloride ion content calculated on the basis of the proposed concrete mix proportions exceeds the specified limits, it will be necessary to test hardened concrete samples of the proposed mix for water-soluble chloride ion content. If these test results exceed the specified limits, it will be necessary to vary ingredients and material sources and retest until specified limits are met.

a. Testing shall be performed by an independent testing laboratory employed and paid by the Contractor following ASTM C1218 test procedures.

4.2.2.8(b) Strength - Minimum concrete strengths shall be in accordance with Table 4.2.2.8(b).

Table 4.2.2.8.b - Mixes and Locations

| MIX TYPE | LOCATION | SPECIFIED STRENGTH (psi at 28 days) (1) | MIN. PORTLAND CEMENT (lb. / cu. yd.) (2) | MAX % OF CHLORIDE BY WEIGHT OF CEMENT | MAX W/CM RATIO | AIR % (1,3) | AGG. SIZE (4) |
|---|---|---|---|---|---|---|---|
| A | Interior Concrete | 4000 | 520 | 0.30 | 0.50 | - | No. 57, 1 in. |
| B | All concrete with exterior exposure | 4500 | 565 (5) | 0.15 | 0.45 | 6 +/- 1.5 | No. 57, 1 in. |
| C | Backfill concrete | 1500 | 280 | 1.0 | - | - | No. 57, 1 in. |

NOTES:
1. Concrete which is placed and does not meet strength or air content requirements shall be removed and replaced at no cost to the Owner.
2. Including fly ash or ground granulated blast-furnace (GGBF) slag in mixes where permitted. Not applicable if a specified minimum amount of fly ash or GGBF slag is listed with the mix. The minimum cement requirement may be met by substituting 1.33 lb. of fly ash for each 1.0 lb. of portland cement replaced, or 1.0 lb. of GGBF slag for each 1.0 lb. of portland cement replaced. The ratio of fly ash to total cementitious materials shall be no less than 15% and no greater than 25%; the ratio of GGBF slag to total cementitious materials shall be no greater than 40%; and the total of fly ash and GGBF slag shall be no greater than 50% of total cementitious materials.
3. Tolerance on entrained air content shall be as delivered.
4. Normal weight aggregate.
5. Fly ash not permitted in this mix.

4.3.1.1(a) Site produced concrete is prohibited.

4.3.1.4 When a high-range water-reducer (superplastcizer) is added at the site it shall be premeasured and added in accordance with the manufacturer's written instructions and specifications, using truck-mounted power injection equipment capable of rapidly and uniformly distributing the admixture to the concrete. The concrete shall be mixed for a minimum of six minutes after addition of the superplasticizer prior to discharge.

4.3.2.1(a) Slump adjustment: When concrete arrives at the project with slump below that suitable for placing, and below the slump specified, water may be added only if neither the maximum water-cementitious materials ratio nor the maximum slump is exceeded, provided that:

1. The approved mix design has allowed for on site addition of water.
2. The amount of water added at the site is accurately measured to plus or minus 1 gallon of the desired added amount.
3. The water addition is followed by 3 minutes of mixing at mixing speed prior to discharge.
4. Standard cylinder samples as required by these Specifications are taken after addition of water.
5. The person authorized to add water shall be mutually approved by Architect/Engineer, Contractor, Construction Manager and Ready-Mix Producer.

4.3.2.1(b) Do not add water to concrete after high-range water-reducing admixtures have been added.

4.3.2.1(c) The maximum water-cementitious materials ratio is defined as that of the mix design furnished by the ready-mix producer. (Not to exceed values noted in Table 4.2.2.8(b)).

4.3.2.1(d) Concrete arriving at the site above the maximum slump shall be rejected.

4.3.2.1(e) Addition of cement, except as part of initial batching at the plant in accordance with an approved mix design, is prohibited.

4.3.2.2(a) The concrete must be discharged from the ready-mix trucks within 1-1/2 hours after the introduction of mixing water to the cement and aggregates.

1. During hot weather or under conditions contributing to rapid setting of concrete, a shorter mixing time specified in ASTM C 94 shall be required.

4.3.2.3 Furnish to the Project Superintendent 2 delivery tickets with each load of concrete. Tickets shall contain the following information.

(a) Date.
(b) Producer and plant.
(c) Job.
(d) Contractor.
(e) Truck No. and time dispatched.
(f) Concrete designation and cement type.
(g) Admixtures description and content.
(h) Time discharge started and completed.
(i) Amount of concrete in load.
(j) Amount of water in mix at plant.
(k) Amount of any material added at the site and authorized signature.

Section 5 (ACI 301) - Handling, Placing and Constructing

5.1.2.1(d)1 Notify the Architect/Engineer at least two working days prior to placing concrete.

5.1.2.1(d)2 No concrete shall be placed without Owner's Testing Agency being present. Give due notice to the Architect/Engineer and all Contractors affected before placing concrete. Allow adequate time for installation of all necessary parts.

5.2.1.1(a) Water used for curing exposed surfaces shall be free of substances that will stain or discolor concrete.

5.2.1.2 Curing Compounds:

(a) Curing Compound for unformed surfaces that will not receive a coating or bonded floor covering shall conform to the requirements of ASTM C1315, Type I, Class A.
(b) Curing Compound for formed surfaces, and unformed surfaces that will receive a coating or bonded floor covering, shall be a dissipating or removable curing compound that conforms to ASTM C309. Furthermore, the curing compound shall be approved in writing by the manufacturers of all coatings, floor coverings and surface treatments used on the project.

Confirm types and locations of coatings, flooring, and surface treatments with Architect.

(c) Curing compound(s) shall comply with all applicable environmental and clean air regulations for the community in which this Project is located.

5.2.1.3 Waterproof curing sheets shall comply with ASTM C171. Prior approved materials:

(a) Orange Label Sisalkraft paper manufactured by the Fortifiber Building Systems Group.
(b) Polyethylene film, minimum 8 mils thickness. Except do not use on surfaces that will be left exposed to view when the project is complete.
(c) BurLene curing blankets manufactured by the Max Katz Bag Company, Inc.

5.2.1.7(a) Epoxy bonding agent shall comply with ASTM C881, Type V, Grade 2, with Class corresponding to temperature at time of pour.

5.2.1.7(b) Latex bonding agent shall comply with ASTM C1059, Type II.

5.2.1.10 Related materials for concrete construction shall be as follows:

5.2.1.10(a) A floor sealer shall be used where no other floor coating is specified. The compound shall be a V.O.C. compliant water-based, non-yellowing acrylic sealer. Apply according to manufacturer's recommendations.

5.2.1.10(b) Non-shrink grout shall have a minimum compression strength of 7000 psi at 28 days and be a non-shrink, non-metallic, non-staining, non-corrosive, premixed grout. Comply with ASTM C 1107.

Prior approved grouts:

1. Dayton Superior Sure-Grip High Performance Grout
2. Euclid Hi Flow or NS Grout
3. Master Builders Masterflow 713 Plus or Materflow 928 grout

5.2.1.10(c) Epoxy Adhesive:

1. Two-component, high modulus, high strength, structural epoxy adhesive for use in installing reinforcing steel dowels into hardened concrete.
2. ASTM C 881, Type IV, Grade 2 or 3 with class corresponding to temperature at time of placement.

5.2.1.10(d) Non-slip Aggregate used as the abrasive aggregate for a non-slip floor finish shall be fused aluminum oxide grits, or crushed emery. Emery aggregate shall not contain less than 40% aluminum oxide nor less than 24% ferric oxide. Use material that is factory-graded, packaged, rustproof and non-glazing, and is unaffected by freezing, moisture and cleaning materials.

5.3.1.3(d) Verify position and securement of embedded items before placing concrete.

5.3.1.4(a)1 Following approval of prepared subgrades by Soils Technician, spread and compact granular base course to 100% maximum dry density as determined by standard Proctor Method ASTM D698.

5.3.1.7 Discharge of concrete from ready-mix trucks shall not begin until testing agency has made preliminary checks of slump (and air content - if required).

5.3.2.1(a)1 Adequate protection against rain, sleet or snow shall be defined as protection that prevents any and all adverse effects of the rain, sleet or snow on the appearance, strength or durability of the concrete.

5.3.2.1(b)1 Placement of concrete in cold weather shall also comply with Article 1.8 of this specification, titled Cold Weather Concreting.

5.3.2.1(c)1 Placement of concrete in hot weather shall also comply with Article 1.9 of this specification, titled Hot Weather Concreting.

5.3.2.1(d) Evaporation Retarder - When low humidity and/or dry winds create conditions suitable for plastic cracking, evaporation retarder may be required to be applied by spray one or more times during the finishing operation. Evaporation retarder shall not be used as a finishing aid.

5.3.2.4(i) Concrete is not permitted to be placed in standing water or under water without approval of Architect/Engineer.

5.3.2.6(d) Vertical construction joints in horizontal structural members are not permitted.

5.3.4.2.1 Slabs shall be finished in accordance with 5.3.4.2(i) 'Nonspecified finish' (as described in ACI 301), unless indicated otherwise on the architectural drawings or in 5.3.4.2(k).

5.3.4.2(k) Specified Finishes of Unformed Surfaces:

Type A Exterior areas exposed to vehicular or pedestrian traffic to receive a floated or light broom finish per the Architect's direction. Finish slabs to a manual straightedge 'conventional' tolerance per ACI 117 (1/2 in. in 10 feet) and provide positive drainage with no "ponds" greater than 6 in. in diameter. Do not "over finish" slabs.

Type B Interior slabs-on-grade shall receive a steel trowel finish in accordance with 5.3.4.2(c). Finish slabs to a 'flat' tolerance (in accordance with ACI 117.

5.3.4.2(k)1 Unformed surfaces which do not comply with the specified tolerances, and are deemed unacceptable by the Architect shall be remedied by the Contractor in a manner acceptable to the Architect at no additional cost to the Owner.

5.3.6.4(a) When forms are removed prior to 7 days, apply one coat of liquid curing compound to all formed surfaces within an hour of formwork removal.

5.3.6.5(e)1 A thin layer of water shall be applied to the slab surface just prior to placement of the waterproof sheet. The sheet shall remain in place for a minimum of 7 days and shall be periodically sprinkled with water to ensure concrete surface remains moist. All edges and laps of the waterproof sheet shall be weighted down and all tears in the sheet shall be immediately repaired so that no portion of the concrete surface remains uncovered.

5.3.6.5(f)1 Apply curing compound to flatwork in two coats at right angles to each other per manufacturer's recommendations. Total application rate shall be in accordance with manufacturer's recommendations, but not less than 1 gal./200 $ft^2$. For rough surfaces, such as broom or scratch finishes, increase application rate per manufacturer's recommendations, but by not less than 50%.

a. Correct coverage shall be maintained by the applicator and determined through accurate measurement of the material and the number of square feet to which it is applied.
b. Curing compound shall also be applied to formed surfaces, including beam and slab soffits, per manufacturer's recommendations when forms are removed sooner than 7 days after concrete is cast.

5.3.6.5(g) Unless otherwise noted, preservation of moisture in concrete shall be by application of a curing compound satisfying the requirements of 5.2.1.2. Apply the curing compound in accordance with 5.3.6.4.e.

5.3.6.5(h) Where curing compound will not be compatible with applied finishes, application of a waterproof sheet material per 5.3.6.4.d or a continuous wet cure is required. Wet cure all slabs to receive a bonded topping or waterproof membrane. Wet cure slabs shown on the architectural drawings as requiring a wet cure.

5.3.7.1(a) All voids, damaged places, fins, projections, and honeycomb areas shall be removed down to sound concrete and repaired immediately after form removal. Any concrete that is not formed as shown on the contract drawings, is out of alignment or level, or indicates a defective surface or unsoundness of any nature shall be removed and replaced to the limits required by the Architect/Engineer unless permission is granted to patch or otherwise correct the defective work. Permission to patch or attempt the correction shall not be construed as a waiver of the Architect/Engineer's right to require complete removal of the defective work should the patching or correction prove to be, in the opinion of the Architect/Engineer, unsatisfactory either as to structure or appearance.

5.3.7.5(a) Repair materials other than site-mixed portland-cement mortar shall be submitted for approval.

5.3.7.7 All patching materials shall be proportioned to match color of surrounding material after patch material has cured. Prior to starting patching operation, test different techniques, grout mixes, and curing procedures on concealed areas to best match cast concrete. Obtain approval from the Architect/Engineer of patching material and methods prior to proceeding with patching.

Section 6 (ACI 301) – Architectural Concrete

6.1.1.1 There is no concrete work designated as Architectural Concrete.

Section 7 (ACI 301) - Lightweight Concrete

7.1.1 Delete this section of ACI 301.

Section 8 (ACI 301) – Mass Concrete

8.1.1 Delete this section of ACI 301.

Section 9 (ACI 301) – Post-Tensioned Concrete

9.1.1 Delete this section of ACI 301.

Section 10 (ACI 301) – Shrinkage-Compensating Concrete

10.1.1 Delete this section of ACI 301.

Section 11 (ACI 301) – Industrial Floor Slabs

11.1.1 Delete this section of ACI 301.

Section 12 (ACI 301) – Tilt-Up Construction

12.1.1 Delete this section of ACI 301.

Section 13 (ACI 301) – Precast Structural Concrete

13.1.1 Delete this section of ACI 301.

Section 14 (ACI 301) – Precast Architectural Concrete

14.1.1 Delete this section of ACI 301.

**END OF FOREGOING PARAGRAPH 1.7 ENTITLED "SUPPLEMENTAL REQUIREMENTS AND MODIFICATIONS TO ACI 301-16".**

## 1.8 COLD WEATHER CONCRETING

A. The provisions of ACI 306.1 shall be followed for all concrete placed or cured when the average daily temperature is below 40 °F. The methods of protection to be used for cold weather concrete, including preservation of moisture for curing of the concrete, shall be submitted in writing to the Architect/Engineer for review at least one week prior to cold weather placement.

B. Plan construction schedule and obtain needed materials and equipment on the job site in advance of cold weather.

C. All reinforcement, formwork and top 12 inches of the subgrade shall be clear of ice and snow and be not less than 40 °F at time of placement of concrete. The temperature of large embedded items, such as weld plate assemblies for structural steel framing, shall be no less than 35 °F at time of placement.

D. The concrete temperature as placed shall not be less than specified in column (2) of Table 3.2.1 in ACI 306.1, and shall not exceed these values by more than 20 °F. The temperature of the concrete being discharged shall be tested by the testing agency whenever cylinders are cast, and hourly by the Contractor. The Contractor shall maintain and submit same to the Architect/Engineer weekly.

E. The Contractor shall install and read maximum/minimum thermometers twice daily during the construction and curing of all structural slabs in cold weather. Provide one thermometer for each 3000 square feet of slab. Place the thermometers near slab perimeter. The Contractor shall submit those temperature readings to the Architect/Engineer weekly.

F. Concrete shall be exposed to ambient temperature in a gradual manner after being cured. Refer to ACI 306.1, Table 3.2.1.

## 1.9 HOT WEATHER CONCRETING

A. The provisions of ACI 305.1 shall be followed for all concrete placed when the ambient air temperature is greater than 80 °F. Note: Concrete protection during windy conditions combined with heat or low humidity shall also conform to ACI 305.1. The methods of protection used for hot weather concreting shall be submitted in writing to the Architect/Engineer for review at least one week prior to hot weather placement.

B. Plan construction schedule and obtain needed materials and equipment on the job site in advance of hot weather.

C. The Contractor and ready-mix supplier shall review concrete mixes for use in hot weather with respect to placing requirements, strength and durability.

D. Concrete temperatures as discharged from the truck shall not exceed 95 °F. Ice, if used, shall be considered part of the total mix water (50 lbs. ice = 6 gallons of water). (Retarders in low slump superplasticized mixes may be required to comply with this requirement.)

E. The temperature of the concrete being discharged shall be tested by the testing agency whenever cylinders are cast, and hourly by the Contractor. The Contractor shall maintain a written record of these temperatures and submit same to the Architect/Engineer weekly.

F. Cool and moisten formwork and subgrade by sprinkling with water prior to placing concrete.

G. Placement and Finishing:

1. Concrete shall be discharged from the truck a maximum of one hour after the introduction of mix water to cement and aggregates.
2. Do not add water to mix to increase slump. Use the approved superplasticizer to maintain a placeable concrete mix.
3. Strike off and screed slabs immediately. Protect slab's surface against moisture loss prior to final finishing.
4. Thoroughly vibrate through all wall and column lift lines and adjacent slab placements to prevent cold joints.
5. Immediately apply liquid curing compound as specified in Section 5 (ACI 301) after final finishing. Follow with continuous wet curing as specified in paragraphs 5.3.6.5(a), 5.3.6.5(b), 5.3.6.5(c) or 5.3.6.5(d) (ACI 301) for a minimum of three days.

**PART 2 - PRODUCTS AND**

**PART 3 - EXECUTION**

**3.1 PRODUCT AND EXECUTION REQUIREMENTS ARE INCLUDED IN ARTICLES 1.7, 1.8 AND 1.9 ABOVE.**

**END OF SECTION 03 3000**

# SECTION 05 1200 - STRUCTURAL STEEL

## PART 1 - GENERAL

### 1.1 RELATED DOCUMENTS

A. Drawings and general provisions of the Contract, including General and Supplementary Conditions and Division 1 Specification Sections, apply to this Section.

### 1.2 SUMMARY

A. Section includes all labor, materials, equipment, special tools and services to complete Structural Steel and Other Steel work required for the Project, as herein specified, and as indicated on the Drawings, including but not limited to:

1. All Structural Steel indicated, including design of connections not shown on the Drawings.
2. All accessories, attachments, anchors and rough hardware for structural steel work. Accessories include anchor bolts, embed plates, deck support angles, anchors to existing construction for support of structural steel, etc.
3. Prime painting and galvanizing where indicated on the Drawings.
4. Quality control, testing and inspection specified to be performed by the Contractor.
5. Coordination with related and adjacent work shown on the Drawings.
6. Setting of items built into cast-in-place concrete or unit masonry and grouting of base plates is not included in this section.

B. The Contract Documents do not differentiate between fabrication and erection work. Should fabrication and erection be performed by separate contractors, the fabricator is responsible for the scope of work of erector and is responsible for resolution of any disputes that may arise.

C. Related Sections:

1. Section 03 3000 - Cast-In-Place Concrete.
2. Divisions 21 through 26 – Supports, anchors, and embedments for mechanical and electrical items specified therein.

### 1.3 REFERENCES

A. Comply with the provisions of the following codes, specifications and standards; use the latest edition unless date is indicated. Modifications in this specification, when in conflict with the referenced codes, specifications and standards, shall take precedence.

1. “Kentucky Building Code” (KBC).
2. American Institute of Steel Construction (AISC) 303-16: "Code of Standard Practice for Steel Buildings and Bridges," June 15, 2016, as modified by the project drawings and this specification; and modifications in Part 4 at the end of this section.
3. ANSI/AISC 360-16: "Specification for Structural Steel Buildings" and including the "Commentary on the Specification for Structural Steel Buildings", July 7, 2016.
4. Research Council on Structural Connections (RCSC): "Specification for Structural Joints using High-Strength Bolts", August 1, 2014.
5. American Welding Society (AWS) D1.1/D1.1M-2010: "Structural Welding Code – Steel.”
6. ASTM A6/A6M-12: "Standard Specification for General Requirements for Rolled Structural Steel Bars, Plates, Shapes, and Sheet Piling ".
7. International Code Council Evaluation Service (ICC-ES) AC193: “Acceptance Criteria for Mechanical Anchors in Concrete Elements”.

8. ICC-ES AC308: “Acceptance Criteria for Post-Installed Adhesive Anchors in Concrete Elements”.
9. Steel Structures Painting Council (SSPC) “SSPC Painting Manual”: “Systems and Specifications” and “Good Painting Practice”
10. American Galvanizer’s Association (AGA) Recommendations and Suggested Specifications for Hot-Dip Galvanizing.
11. OSHA Regulations, current edition.

## 1.4 QUALIFICATIONS

A. Contractor must have a minimum of 5 years of successful experience in the type of work required and submit with his Bid evidence of qualifications required herein.

B. Steel Fabricator:

1. 5 years of successful experience in the fabrication of structural steel.
2. The steel fabricator must be certified under the AISC Certification Program for Structural Steel Fabricators – Standard for Steel Building Structures, or for Steel Bridge Fabricators – Standard for Steel Bridges. Evidence of current auditing by an independent, approved inspection agency that the fabricator has established quality control procedures comparable to the AISC program may be considered in lieu of AISC certification.
3. Steel fabricator must have an established in-house quality control program for shop drawing production, material tracking, material inspection, welder certification, weld quality, and fabrication accuracy. Fabricator shall be registered and approved per Section 1704.2.2 of the Building Code, and submit required certificate of compliance. Failure to meet these qualifications will require additional inspections prescribed in Building Code Chapter 17 to be performed by the Owner’s inspection agency at the Contractor’s expense.

C. Steel Erector:

1. 5 years of successful experience in the erection of structural steel.
2. The steel erector must be certified under the AISC Certification Program for Structural Steel Erectors – Standard for Structural Steel Erectors. Evidence by an independent, approved inspection agency that the erector has established quality control procedures, including weld testing, comparable to the AISC program may be considered in lieu of AISC certification.

## 1.5 SUBMITTALS

A. The Contractor shall review submittals for compliance with the Contract Documents, accuracy, dimensions, fit-up, constructability, and coordination with other work. The structural engineer’s review will be for general intent of strength and serviceability only.

B. Submit for record evidence of Steel Fabricator’s and Erector’s quality control programs, procedures and certifications showing conformance with Chapter 17 of the Building Code.

C. Submit detailed drawings, include:

1. Complete details and schedules for fabrication and shop assembly of all members.
2. Complete details, schedules, procedures and diagrams for field erection.
3. Layout and installation drawings for all anchor bolts and other items to be embedded in concrete work by others. Drawings shall dimension the locations of all embedded items noting pertinent tolerances for the installation.

D. Prior to fabrication, submit for record two copies of producer's or manufacturer's specifications and installation instructions for the following items. Include laboratory test reports and other data for evidence as required to show compliance with these specifications (including specified

standards). Indicate by transmittal form that copies of each applicable instruction have been distributed to fabricators, installers and erectors.

1. Structural steel: Submit the mill report for each heat of steel used prior to the start of fabrication. Mill reports shall show chemical analysis to include C, Mn, Cr, Mo, V, Ni, Cu and full mechanical properties of the structural steel provided. For unsatisfactory mill test report, retest or reject steel.
2. High-strength bolts, including nuts and washers: Submit certification of inspection test report for each production lot indicating proof load, tensile strength and hardness of high strength bolts. For unsatisfactory test reports, retest or reject bolts.
3. Welding materials and procedures: Submit written welding procedures for all welding on the project, both shop and field.
4. Mechanical and adhesive anchors, include manufacturer's evaluation reports (ESR) and specific project locations and conditions where proposed for use.
5. Primer paint and surface preparation procedures.
6. Hot-dip galvanizing and surface preparation procedures

E. During fabrication and construction, Contractor shall submit quality control, inspection and test reports immediately to the Owner's representative and inspector, with a copy to the structural engineer within one week. Include:

1. Welder certification for shop and field welders.
2. Welding, fabrication and erection inspection reports.
3. Welding verification inspection and test reports for all shop and field welds.
4. Bolt and anchor tests and installation reports.
5. Contractor's weekly inspection report summary.

F. Submittals for record, informational submittals, compliance reports and inspection reports will not be reviewed or returned.

## 1.6 QUALITY CONTROL

A. Personnel performing the work shall have experience relevant to anticipated conditions, materials, installation requirements and all special techniques involved. Contractor shall have an experienced foreman or superintendent who will be present while work is performed.

B. The Contractor is responsible for and shall perform quality control, testing and inspection of all work as required by the Contract Documents, referenced codes, specifications and standards. Contractor shall employ qualified inspectors to perform inspections, tests and quality control daily. Submit reports weekly.

C. The Contractor shall reject and replace work that is not in conformance.

D. Qualify welding processes and welding operators in accordance with AWS "Standard Qualification Procedure". All welding shall be performed by operators who are qualified for the types of welds used. Verify each operator's qualifications with Owner's inspector prior to using in production.

1. Welders shall retake qualification test if, as determined by the Owner's representative, there is a reasonable doubt as to the proficiency of the welder. If the welder does not requalify he/she shall not perform welding on this project.
2. The Contractor shall pay all costs associated with welder qualification.

E. Qualify mechanical fasteners, mechanical anchors, adhesive anchors and installation processes in accordance with manufacturer's engineering reports and code recognized approval procedure. Installers shall be certified by the manufacturer or an independent organization. Verify each installer's qualifications with the Owner's inspector prior to using in production.

F. Source quality control: All materials shall be Identifiable. Unidentifiable materials shall be tested or rejected.

1. Materials delivered with certificate are classified as Identifiable; those without certificates are classified as Unidentifiable.
2. Test material not identifiable by heat number and mill test, or other acceptable manufacturer's identification per ASTM A370-17. Testing to be performed by Contractor's testing agency as follows:
   a. Structural shapes and plates: From coupons taken from material; one tensile test and one bend test per 5 tons of each shape.
   b. High strength bolts: Each lot of 100 bolts; tensile tests on 2 bolts in full size and one tensile test on a ½" diameter machined specimen.
   c. Other materials: Test as directed.

G. The Contractor shall arrange for review by the Owner's inspection agency. The Contractor shall not rely on the Owner's inspector for the Contractor's quality control. Contractor shall furnish Owner's inspector with the following:

1. One complete set of fabrication and erection drawings.
2. Material bills and mill test reports.
3. Information regarding time, place of rolling and shipment of materials to shop.
4. If requested, representative sample pieces for testing.
5. Full and ample means and assistance for testing materials.
6. Complete set of welding procedures.
7. Welder qualifications.
8. All manufacturers' installation instructions.
9. Anchor installer qualifications.
10. AISC fabricator certification documents QA/QC manual and most recent AISC audit.
11. AISC erector certification documents QA/QC manual and most recent AISC audit.
12. Qualifications for Contractor's quality control personnel and independent testing agency.
13. Reports for all quality control, tests and inspection by Contractor.

H. Structural inspections required by Chapter 17 of the Building Code shall be performed by an approved inspector retained by the Owner.

## 1.7 DELIVERY, STORAGE, AND HANDLING

A. Material storage: Protect structural steel members and packaged materials from corrosion and deterioration. Store off ground and pitched to drain off water.

B. Do not store materials on the structure in a manner that might cause distortion or damage to the members or the supporting structures. Repair or replace damaged materials or structures as directed.

C. Deliver welding electrodes to job in unbroken packages bearing name of manufacturer. Special handling for electrodes is required per AWS. Provide and use an oven for electrodes requiring continuous drying prior to use.

# PART 2 - PRODUCTS

## 2.1 MATERIALS

A. Structural steel:

1. Wide flange shapes: ASTM A992.

2. Other rolled shapes, plates and bars: ASTM A36, U.N.O.
3. HSS tubular square, rectangular and round shapes: ASTM A500, Grade B, Fy = 46 ksi
4. Structural steel pipe: ASTM A53, Type E or S, Grade B (Spiral Pipe is not permitted).
5. All steel to be welded shall conform to chemical and metallurgical limitations specified in AWS D1.1 and D1.3.

B. Threaded fasteners:

1. Anchor rods: ASTM F1554, Fy 36ksi, minimum.
2. Structural bolts: ASTM A325 heavy-hex structural bolts, heavy-hex nuts and hardened washers, quenched and tempered type 1 medium-carbon steel. Use tension control assemblies conforming to ASTM F1852 everywhere access permits. For all bolts unless noted otherwise.
3. Where access prevents the use of a tension control bolt, install bolt(s) with load indicator washer conforming to ASTM F959, in accordance with "Specification for Structural Joints Using High-Strength Bolts" (12-31-09), paragraph 8.2.4, and mark bolt(s) for inspection. Load indicator washers shall be self-indicating to allow visual observation, and provided with 1 or more additional flat washers, based on hole type, as required by the manufacturer.

C. Welding electrodes:

1. Use electrodes as required by AISC "Specification for Structural Steel Buildings" and the AWS Code. As minimum use E70 XX electrodes, low hydrogen.
2. For complete penetration welds of beams, columns and trusses, use E70TG-K2 electrodes or better.

D. Mechanical and adhesive anchors: ICC-ES approved with current ESR for cracked concrete, zinc coat unless noted otherwise, galvanize, sherardized or use stainless steel where exposed to weather. Type and embedment depth into concrete as indicated on the drawings, if not shown embed 8 x diameter, but never less than the manufacturer's recommended standard embedment. Manufacturers may include:

1. Hilti, Inc.
2. Powers Fasteners, Inc.
3. Simpson Strong-Tie Company, Inc.

E. Galvanizing: ASTM A123. Galvanize bolts and washers connecting galvanized members per ASTM A153, Class C. Touch up with galvanizing repair compound.

F. Galvanizing repair: Zinc rich galvanize repair compound containing 90% minimum zinc by weight in the dried film. Comply with DOD-P-21035 or The Society for Protective Coatings, Paint Specifications No. 20 (SSPC-PS 20).

G. Structural steel primer paint: One coat rust inhibitive primer, gray. Paint shall be weldable with negligible effect on weld integrity.

## 2.2 FABRICATION

A. The fabricator shall track materials, assemble, inspect and test the work under supervision of qualified quality control personnel, who shall ensure conformance with established written procedures to meet the design requirements. Inspector shall make written daily reports of progress, deviations, deficiencies and corrections, and confirm work is satisfactory. Submit reports weekly.

B. General:

1. Fabricate items of structural steel in accordance with this specification, the referenced codes and standards, the contract design drawings and the final reviewed shop drawings.

2. Properly mark and match-mark materials for field assembly. Fabricate for delivery sequence that will expedite erection and minimize field handling of materials.
3. Where finishing is required, complete the assembly, including connections and welding of units, before start of finishing operations.
4. Furnish main steel members in one piece without splicing unless otherwise shown or approved.

C. Connections:

1. Provide welded shop connections unless otherwise shown.
2. Provide bolted field connections unless otherwise shown.
3. Provide high-strength bolts for all bolted connections.
4. Cut, drill, or punch holes perpendicular to metal surfaces. Do not flame cut holes or enlarge holes by burning. Drill holes in bearing plates.
5. Comply with AWS D1.1 Code for procedures, preheat, appearance and quality of welds, including methods used in correcting welding work. Assemble and weld built-up sections by methods that will produce true alignment of axis without warp.

D. Provisions: Provide holes, weld nuts, welded studs, etc., required for securing other work to structural steel and for the passage of other work through steel framing members as required.

## 2.3 FINISHING

A. Galvanize structural steel where indicated on the Drawings, including all exterior plates and shapes, mechanical support frames, ledge angles, lintels, and lintel plates.

1. Clean steel to be galvanized of foreign substances per ASTM A385. Power tool clean all welds and adjacent areas to remove flux and splatter before galvanizing.
2. Provide 2.3-oz./sf zinc coating per ASTM A123.

B. Prime paint structural steel where indicated on the Drawings, do not paint at field weld locations or slip critical faying surfaces. Do not paint galvanized steel or steel which is to be fireproofed.

1. Surface Preparation (after SSPC SP-1 Solvent Wipe): SSPC SP-3 “Power Tool Cleaning.”
2. Immediately after surface preparation, apply structural steel primer paint in accordance with the manufacturer’s instructions and at a rate to provide a uniform dry film thickness of 2.0 mils. Use painting methods that will result in full coverage of joints, corners, edges and all exposed surfaces. No sags or runs permitted on steel that will be exposed in the finished work.

# PART 3 - EXECUTION

## 3.1 EXAMINATION

A. Field survey and measure all existing conditions prior to preparation of shop drawings.

B. Check elevations of concrete bearing surfaces and locations of anchor bolts and similar devices before fabrication work and report dimensional discrepancies to the Owner’s representative. Do not proceed with fabrication until corrections have been made or until compensating adjustments to structural steel have been approved by the Owner’s structural engineer.

C. Furnish templates and detailed setting drawings as needed to ensure accurate positions of anchors.

D. Verify positions of anchor bolts before fabrication of steel. Report deviations from design locations and submit written recommendations for corrections.

E. Notify the Owner's representative in writing of conditions that would hinder proper and timely installation, or impair performance of finished work.

## 3.2 INSPECTION BY CONTRACTOR

A. Quality control, testing and inspection by Contractor for fabrication and erection shall conform to requirements of the Contract Documents, referenced codes, specifications and standards; and the following:

1. Inspection by Contractor shall be at Contractor's expense, by a testing agency or qualified inspector other than that employed by Owner, and shall be performed before Owner's inspection of material involved.
2. Contractor shall submit weekly written inspection report summaries to the Owner's representative, inspector, and structural engineer. In general, these reports shall:
    a. Verify that welders are certified.
    b. Confirm use of qualified welding procedures and:
        1) Welding equipment is used per manufacturer's recommendations.
        2) Proper use of drying oven and preheating.
        3) Fit-up and structural steel compliance with the specified dimensional standard.
        4) Proper use of run-out plates.
    c. Inspect every weld for quality and conformance. Systematically record welds, include:
        1) Location and type of weld.
        2) Weather conditions during welding.
        3) Identification marks of welders.
    d. Include bolts, anchors and other items.
    e. Report all defects and deficiencies.
    f. Report and describe how corrections were made.
3. Acceptance criteria used for the inspection of welds shall be as specified in AWS D1.1.

B. Visually inspect all material for defects before and after cleaning. Material with visible defects shall be rejected.

C. Penetration welds: Inspect all (100%) complete and partial penetration welds visually. Inspect all (100%) complete penetration welds by ultrasonic or radiographic tests for entire length of weld. All inspections to occur a minimum of 24 hours after completion of welding.

1. Material that fails testing shall be corrected and re-tested over entire length of weld until satisfactory results are achieved.
2. Ultrasonic testing shall be performed by a specially trained, qualified technician to operate equipment, examine welds, and maintain a record of welds examined, defects found, and dispositions of defects.
3. When ultrasonic indications arising from weld root can be interpreted as either a weld defect or backing strip, the backing strip shall be removed and the weld shall be re-tested.
4. Ultrasonic instrumentation shall be calibrated by technician to evaluate the quality of welds per AWS D1.1.
5. Other methods of inspection, for example, x-ray, gamma ray, magnetic particle, or dye penetrant, may be used on welds if acceptable to the Owner's structural engineer.

D. Fillet welds: Inspect all (100%) shop and field fillet welds visually for proper size, quality of weld and placement per reviewed shop drawings. Inspect 5% of a mix of field and shop welds by magnetic particle method, ASTM 109.

E. High strength bolted connections: At beginning of bolting operations, verify bolt installation techniques and test bolts in field conditions for proper pretension per manufacturer's requirements. Retest when changes in bolt lots, lubrication and weather exposure conditions occur. Inspect all bolted connections for bolt size, quantity, type, and tension.

F. Mechanical and adhesive anchors: Verify installers are certified and materials are used in conformance with manufacturer's recommendations. Observe hole preparation and installation technique at all anchors as work progresses. Proof test 5% of all anchors in each condition, distributed throughout the project, and at least 1 anchor in each steel framing connection. Amount of testing shall be increased if failures occur.

## 3.3 INSPECTION BY OWNER

A. The Owner will engage an independent inspection agency to perform shop and field verification inspection services in accordance with referenced standards. The Contractor shall schedule and coordinate inspections.

1. The Owner will pay costs of initial inspection.
2. Material that fails inspection shall be corrected by Contractor and re-inspected until satisfactory results are achieved.
3. The Contractor shall pay costs incurred by Owner's inspection agency, architect, and/or engineer for re-inspection of corrections made because of failed initial tests.
4. Inspection may be performed in shop or field.
5. Contractor shall perform all necessary preparatory work for inspection such as cleaning, marking and removal of back-up bars, if needed, without additional costs.
6. Acceptance criteria used for the inspection of welds shall be as specified in AWS D1.1.

B. Inspections do not relieve Contractor of responsibility for contract compliance. The Owner's representative shall have the right to inspect or test work and reject faulty materials of workmanship at any time before final acceptance.

C. General:

1. Review Contractor's quality control program.
2. Review Contractor's fabrication and erection inspection reports for compliance with the requirements of AWS D1.1 and Inspection by Contractor, above.
3. Verify welder's certifications.
4. Provide required verification inspections.
5. Record types and locations of all defects discovered, report such discoveries to Contractor, and record corrections performed. Reports will be made not less than weekly to the Owner's representative.

D. Penetration welds: All (100%) complete and partial penetration welds shall be visually inspected. Twenty percent (20%) of complete penetration welds shall be inspected ultrasonically for the entire length of weld. Columns, beams and plate material perpendicular in connections with penetration welds will be checked for lamellar tears. Further inspection may be required if unacceptable welds or material are found. Contractor shall pay cost of such additional inspection. Rejection of any portion of a weld shall require re-inspection of 100% of that weld after repair.

E. Fillet welds: Twenty percent (20%) of the field-placed fillet welds shall be visually inspected. Five percent (5%) of shop-placed welds shall be visually inspected to verify fabrication quality control. Inspector is to verify placement of welds per reviewed show drawings, as well as proper size and quality of weld.

F. High strength bolted connections:

1. Observe Contractor's testing and installation techniques meet manufacturer requirements.
2. Visually inspect all bolted connections for bolt size, quantity, type, and tension. Inspection shall also confirm that bolts' threads are not in the shear plane where required.

G. Mechanical and adhesive anchors: Verify installer certification. As work progresses, observe installation for conformance with manufacturer's recommendations and witness Contractor's proof testing.

H. Remedies: Defective material shall be removed and replaced by the Contractor unless corrective procedures are permitted by the engineer. Corrections shall be tested at Contractor's expense until satisfactory results are achieved.

## 3.4 OXYGEN (FLAME) CUTTING

A. Manual oxygen cutting shall be done in the shop only and only with a mechanically guided torch. Alternatively, an unguided torch may be used provided the cut is not within 0.5 inches, of the finished dimension and the final removal is completed by chipping or grinding to produce a surface quality equal to that of the base metal at cut edges.

B. Control process to prevent excessive hardening of edges of steel where material is to be welded or is subject to axial tension.

C. Clean and repair all cut edges by welding and/or grinding to remove all gouges, cuts, burrs, and jags to meet the requirements of AWS D1.1.

D. Re-entrant cuts shall have as large a radius as possible without over cutting.

E. The use of oxygen-cut holes for bolted connections is not permitted under any circumstances. Violation will be cause for the rejection of any pieces in which oxygen cut bolt holes exist.

F. Oxygen cutting of structural steel in the field is not allowed except with the written consent and approval of the Owner's structural engineer.

## 3.5 BOLTS

A. Assemble joint using drifts to obtain correct alignment.

B. Fit bolts. Use hardened washers under the turned part. Lubricate bolts to prevent nuts seizing on the bolts. Lubricate with a liquid high pressure lubricant and apply only to the outstanding threads after the bolts have been inserted through the steel work, taking care to prevent lubricant getting between the plies of the joint.

C. Tighten bolts sufficiently in an appropriate sequence to bring joint surfaces into uniformly close contact.

D. Pretension all high strength bolts to the appropriate levels using tension control bolts or load indicator washers.

E. Mark each bolted connection when all bolts in the connection are prestensioned. Do not touch-up paint or cover until bolts have been inspected. The inspector shall mark connections that have been inspected.

## 3.6 MECHANICAL AND ADHESIVE ANCHORS

A. Post-installed anchors into concrete shall only be used as shown in the structural details, and only as submitted and reviewed.

B. Anchors shall be ICC-ES approved with current ESR for cracked concrete, zinc coat unless noted otherwise, galvanize or use stainless steel where exposed to weather.

C. Anchor size, type, embedment depth into concrete, edge distances and spacing are crucial, and shall be as indicated on the structural drawings. If not shown, embed 8 x diameter, but never less than the manufacturer's recommended standard embedment, with edge distances at least 8 x diameter and spacing at least 12 x diameter.

D. The Contractor shall arrange for a representative of the manufacturer to provide onsite installation training for their products. Adhesive anchor installers shall also be certified by a recognized program, such as by ACI and CRSI. Submit documentation of training and certification of personnel prior to performing such work. Provide copy to the Owner's inspector.

E. Holes into concrete must not interfere with reinforcing bars. The Contractor shall review the structural drawings and use ferro-scan, chipping or other means to locate reinforcing bars in the area. Space holes to fit around rebar and fabricate fixture to match.

F. Install in strict accordance with the manufacturer's ESR, written instructions and recommendations. Holes in concrete shall be the proper size and thoroughly cleaned with all dust removed. Drill holes using a hollow bit and functioning vacuum system, then brush and blowout with compressed air.

G. Install into dry concrete in clean, dust free holes using method and procedure that meets manufacturer's recommendations including temperature range, humidity, installation time and cure time. Follow the manufacturer's printed installation instructions. Instructions must be included in the anchor packaging.

H. Provide standard size holes in the fastened steel element (1/16" larger than anchor diameter). Mark and drill all holes in the concrete before setting steel. Some anchors may be set after steel is in place to allow some alignment. Do not oversize holes. Use washers beneath nuts.

I. Contractor shall perform quality control, inspect and test anchors.

J. When exposed to view in the final structure, bolts shall be of a length that will extend entirely through but not more than ¾-inch beyond the nuts unless otherwise shown on the drawings.

## 3.7 WELDING (APPLIES TO BOTH SHOP AND FIELD WELDS)

A. Weld using only qualified and approved AWS procedures. Use drying oven for electrodes and preheat steel per AWS requirements.

B. Weld in manner to prevent warping or distortion of finished product. Use jigs that will not restrain piece from moving during welding or cooling after welding. Sequence weld passes at a joint to prevent excessive heat build-up or cause shrinkage cracks to form. Adequately peen and brush joint after successive passes to prevent slag inclusions, open pockets, and inadequate fusion.

C. Provisions shall be made in detailing of lengths of members for dimensional changes as a result of shrinkage stresses so as to provide required finished dimension.

D. During assembling and welding, hold components with adequate clamps or other means to keep parts straight, accurately aligned and positioned, and in close contact. Plan sequence of field welding to minimize locked-in stresses and distortion.

E. Provide adequate screening from wind for field welding.

F. Cut out defective welds or parts of welds with a chisel or air arc, and re-weld.

G. Fillet weld sizes shall comply with the minimum requirements of the AWS D1.1 Code regardless of smaller sizes being noted on the contract design drawings.

H. Remove run-off tabs and grind surfaces smooth where the tabs interfere with architectural treatment or are exposed to view in the final structure. Remove backup bars where exposed to public view in the completed structure.

### 3.8 ERECTION

A. Comply with this specification, the referenced codes and standards, the contract design drawings, and the final shop drawings. Comply with requirements of governing authorities, including requirements for work above public streets and sidewalks.

B. Field assembly:

1. Set structural frames accurately to the lines and elevations indicated. Align and adjust the various members forming a part of a complete frame or structure before permanently fastening. Clean bearing surfaces and other surfaces that will be in permanent contact before assembly. Perform necessary adjustments to compensate for discrepancies in elevations and alignments.
2. Level and plumb individual members of the structure within specified AISC tolerances, unless more restrictive tolerances are specified on the drawings.
3. Splice members only where shown or specified.
4. Comply with AISC Specifications for bearing, adequacy of temporary connections, alignments and the removal of paint on surfaces adjacent to field welds.
5. Do not enlarge unfair holes in members by burning or by use of drift pins except in secondary bracing members. Ream holes that must be enlarged to admit bolts. Where a hole is required to be enlarged by more than 3/32-inch ream to and use the next larger bolt size.
6. Do not use gas cutting torches in the field for correcting fabrication errors, except on secondary members that are not under stress. Finish gas-cut sections equal to a sheared appearance.

### 3.9 CLEANING

A. Following erection, clean all steel work of mud and dirt accumulated during erection. Thoroughly clean and remove dirt, debris, oil, water, and other foreign material from steel and leave ready for painting or fireproofing.

B. Field, coat all damaged and abraded areas of galvanized steel with galvanizing repair compound applied per manufacturer's instructions.

C. Field prime paint all welded, damaged and abraded areas and previously unprimed steel at welds, slip critical connections, etc. with same material used for shop painting.

## PART 4 - ADDITIONAL REQUIREMENTS

### 4.1 MODIFICATIONS TO THE AISC CODE OF STANDARD PRACTICE

A. Modifications to the AISC Code of Standard Practice are described throughout the Contract Documents and within this Section. Requirements of the Contract Documents that modify or conflict with referenced standards shall take precedence over the standard. Where a numbered paragraph is noted below, the requirements of said paragraph in the AISC “Code of Standard Practice for Steel Buildings and Bridges”, June 15, 2016, and its Commentary are deleted and the requirements noted herein shall apply.

1.4.1 Contract documents for structural work shall be issued as printed or printable contract documents. Requirements shall be the plain text and drawings printed on the

documents. Digital information in any electronic file or model shall not be used in lieu of or for augmentation of the printed contract documents.

1.8.1 (a) Steel Contractor shall provide, install and remove any shoring necessary for the installation of new structural steel.

1.8.3 Fabricator shall survey and determine existing dimensions and elevations required for structural steel work or arrange for field verification through the GC or CM, with no additional cost to the Owner.

3.1 (j) Dimensions and elevations for structural steel may require coordination with architectural components, mechanical requirements, and existing conditions and may not be completely shown on the structural drawings.

3.1.1.1 Connections shall be as indicated in the design documents with engineering design and detailing of all parts, copes, stiffeners and welds completed by the Fabricator using option 2 and option 3.

3.1.1.2 Should connection configurations differing from the design documents be needed, Fabricator shall propose and submit details prior to shop drawing preparation. The submittal shall clearly define the location of all connections submitted for review. See Section 4.2.3.

3.1.1.3 If additional information or clarifications regarding connections is desired, the Fabricator shall contact the structural engineer of record.

3.1.2.1 Connection design shall account for concentrated forces using option 3B. Even if reinforcement details and quantities are not shown on the design documents, reinforcement may be required by connection design and shall be included in the work and bid.

3.2 Architectural, Electrical and Mechanical Design Drawings and Specifications

Architectural, Electrical and Mechanical Drawings may be used as a supplement to the Structural Drawings to define detail configurations and construction information, including dimensions and locations.

3.5 Revisions to Design Drawings and Specifications

Revisions are addressed in Section 9.3

4.2.4 Legibility of Drawings

Drawings shall be clearly legible and drawn to an identifiable scale that is appropriate to clearly convey the information, but not less than 1/8” to the foot, unless a smaller scale is approved by the Owner’s representative.

4.4 Review of Shop Drawings

Shop drawings shall be made by the Contractor and shall be submitted for review. The architect and engineer will endeavor to complete their review of shop drawing submittals within 14 days of engineer's receipt of submittals for those shop drawings deemed critical; other shop drawings, 28 days. Shop drawings shall be returned noted: "No exceptions noted," or "Exceptions noted," or "Exceptions noted, revise and resubmit." Fabrication of material prior to the receipt of shop drawings for that material noted "No exceptions noted" or "Exceptions noted" shall be at the Contractor's risk.

4.4.1 Review of shop drawings does not relieve the Contractor of the responsibility for accuracy of detail dimensions; the general fit-up of parts to be assembled in the field; the ability to erect the material; the adequacy of any members or connections designed by the Contractor; or the Contractor's safety measures.

4.4.2 Any notations made on the shop drawings or answers to a Request For Information (RFI) do not authorize additional compensation for the Contractor without the issuance of a formal change order.

4.5 Fabrication and/or Erection Drawings Not Furnished by the Fabricator

Fabrication and erection drawings shall be made by the Fabricator or his subcontractor and shall be the responsibility of the Fabricator.

9.3.1 Revisions to the structural steel requirements are made by issuance of new documents, reissuance of existing documents, answers to RFIs, or by annotation of shop or erection drawings.

9.3.2 A revision to the contract price is made by formal change order.

**END OF SECTION 05 1200**

# SECTION 20 0000 GENERAL MECHANICAL REQUIREMENTS

## PART 1 - GENERAL

### 1.1 REFERENCE

A. Work under this Section is subject to requirements of Contract Documents including General Conditions, Supplementary Conditions, and sections under Division 01 General Requirements.

### 1.2 DESCRIPTION

A. Intent of drawings and Specifications is to obtain complete systems, tested, adjusted, and ready for operation.

B. Except as otherwise defined in greater detail, the terms "provide", "furnish" and "install" as used in Division 20, 21, 22 and 23 Contract Documents shall have the following meanings:
   1. "Provide" or "provided" shall mean "furnish and install".
   2. "Furnish" or "furnished" does not include installation.
   3. "Install" or "installed" does not include furnishing.

C. Include incidental details not usually shown or specified, but necessary for proper installation and operation.

D. Check, verify and coordinate work with drawings and specifications prepared for other trades. Include modifications, relocations or adjustments necessary to complete work or to avoid interference with other trades.

E. Information given herein and on drawings is as exact as could be secured but is not guaranteed. Do not scale drawings for exact dimensions.

F. Where Architectural features govern location of work, refer to architectural drawings.

G. Contractor may install additional piping, fittings and valves, not shown on drawings, for testing purposes or for convenience of installation. Where such materials are installed, they shall comply with specifications and shall be sized to be compatible with system design. Remove such installed materials when they interfere with design conditions or as directed by Architect.

### 1.3 RELATED WORK

A. Utility Services:
   1. Include costs for temporary service, temporary routing of piping or any other requirements of a temporary nature associated with utility service.

B. Temporary Services:
   1. Division 01 - Temporary Facilities and Controls.

C. Continuity of Service:
   1. No service to adjacent existing buildings shall be interrupted or changed without permission from Architect and Owner. Obtain written permission before any work is started.
   2. When interruption of services is required, Architect, Owner, and other concerned parties shall be notified and shall determine a time.

D. Demolition:

1. Division 02 - Selective Demolition.
2. Perform demolition as required to accomplish new work.
3. Accomplish work in neat workmanlike manner to minimize interference, annoyance or inconvenience such work might impose on Owner or other Contractors.
4. Unless otherwise noted, remove from premises materials and equipment removed in demolition work.
5. Equipment noted to be removed and turned over to Owner, shall be delivered to Owner at place and time Owner designates.
6. Where materials are to be turned over to Owner or reused and installed by Contractor, it shall be Contractor's responsibility to maintain condition of materials and equipment equal to that existing before work began. Repair or replace damaged materials or equipment at no additional cost to Owner.
7. Where demolition work interferes with Owner's use of premises, schedule work through Architect, Owner and with other Contractors to minimize inconvenience to Owner. Architect must approve schedule before Contractor begins such Work.

E. Concrete Work:
   1. Provide cast-in-place concrete as required by Contract Documents unless otherwise noted.
   2. Concrete shall comply with Division 03 - Concrete.
   3. Provide anchor bolts, metal shapes and templates required to be cast in concrete or used to form concrete for support of mechanical equipment.

F. Painting:
   1. Painting of mechanical equipment will be done under Division 09 unless specified otherwise or unless equipment is to be furnished with factory applied finish coats.
   2. Equipment
      a. Furnish equipment with factory applied prime finish unless otherwise specified.
      b. If factory finish on equipment furnished by Contractor is damaged in shipment or during construction, refinish equipment to satisfaction of Architect.
   3. Piping:
      a. Uninsulated Piping
         1). Paint cast iron, carbon steel, and copper piping located outside building**.**
         2). Galvanized steel and stainless steel piping shall not be painted.
      b. Paint Colors
         1). Fire Protection: Red
         2). Natural Gas: Red
         3). Domestic Water: Green
         4). Sanitary Waste and Vent: Black
         5). Storm and Overflow: Galvano
         6). Chilled Water: Blue
         7). Heating Hot Water: Yellow
         8). Steam: Orange

## 1.4 REQUIREMENTS OF REGULATORY AGENCIES

A. Rules and regulations of Federal, State and Local Authorities and utility companies, in force at time of execution of Contract shall become part of this specification.

## 1.5 REFERENCE STANDARDS

A. Agencies or publications referenced herein refer to the following:

1. AGA American Gas Association
2. AMCA Air Movement and Control Association
3. ANSI American National Standards Institute
4. AHRI Air-Conditioning, Heating and Refrigeration Institute
5. ASHRAE American Society of Heating Refrigerating and Air Conditioning Engineers
6. ASPE American Society of Plumbing Engineers
7. ASSE American Society of Sanitary Engineering
8. AWS American Welding Society
9. AWWA American Water Works Association
10. ASME American Society of Mechanical Engineers
11. ASTM American Society for Testing and Materials
12. CDA Copper Development Association
13. CISPI Cast Iron Soil Pipe Institute
14. FMG FM Global
15. FS Federal Specifications
16. IEEE Institute of Electrical and Electronics Engineers
17. MCA Mechanical Contractors Association
18. MSS Manufacturers Standardization Society
19. NEC National Electrical Code
20. NEMA National Electrical Manufacturers Association
21. NFPA National Fire Protection Association
22. NIST National Institute of Standards & Technology
23. NSF National Sanitation Foundation
24. NSPI National Spa and Pool Institute
25. OSHA Occupational Safety and Health Administration
26. PDI Plumbing and Drainage Institute
27. SMACNA Sheet Metal and Air Conditioning Contractors National Association
28. UL Underwriters Laboratories, Inc.
29. WQA Water Quality Association

B. Work shall be in accordance with latest edition of codes, standards or specifications unless noted otherwise.

## 1.6 SUBMITTALS

A. Shop Drawings (Product Data):

1. Refer to Division 01 - Submittal Procedures.
2. Note that for satisfying submittal requirements for Divisions 20, 21, 22 or 23, "Product Data" is usually more appropriate than true "Shop Drawings" as defined in Division 01. However, the expression "Shop Drawings" is generally used throughout Specification.
3. Submit shop drawings for equipment and systems as requested in the respective specification sections. Submittals that are not requested may not be reviewed.

4. Specifically mark general catalog sheets and drawings to indicate specific items submitted and its correlation to specific designation for product in drawings.
5. Specifically indicate proper identification of equipment by name and/or number, as indicated in specification and shown on drawings.
6. When manufacturer's reference numbers are different from those specified, provide correct cross-reference numbers for each item. Clearly mark and note submittals accordingly.
7. Submit complete record of required components when fixtures, equipment and items specified include accessories, parts and additional items under one designation.
8. Include composite wiring diagrams for electrically powered equipment and devices.
9. Submit equipment room layouts drawn to scale, including equipment, piping, accessories and clearance for maintenance.
10. Where submittals cover products containing non-metallic materials, include "Material Safety Data Sheet" (MSDS) from manufacturer stating physical and chemical properties of components and precautionary considerations required.
11. Submit shop drawings or product data as soon as practicable after signing contracts. Submittals must be approved before installation of materials and equipment.
12. Submittals that are not complete, not permanent or not properly checked by Contractor will be returned without review.

B. Certificates and Inspections:
   1. Obtain and pay for inspections required by authorities having jurisdiction and deliver certificates approving installations to Owner unless otherwise directed.

C. Operation and Maintenance Manuals:
   1. Refer to Division 01 - Operation and Maintenance Data.

   2). By or before the time construction is 75% complete, submit one (1) copy to Architect for approval of operation and maintenance manuals in loose-leaf binders. After securing approval, submit all one (1) hard copy and one (1) electronic copy to Owner.

   3). Manuals shall be bound in white, hard cover, three ring (D-ring) binders with clear view, presentation type, vinyl covers. Binders shall also contain front and back pockets. Maximum allowable spine width is two inches. No binder will be accepted that is filled to more than 80% of capacity. When necessary to submit multiple volume sets, each volume will be labeled numerically, using Roman numerals, in ascending order, beginning with number I. The order of the volumes will follow the specification division numbers contained on the tabs inside each volume.

   4). Manuals provided must be of sufficient detail as to enable University Employees to install, calibrate, train, operate, maintain, service, and repair every system, subsystem, and piece of equipment installed on or as a part of this project.

   5). The Front cover insert shall be printed on high quality white, bonded paper and contain the following: U.K. Logo, U.K. Project Title, U.K. Project Number, Location, date of submittal, volume number, name of Architect, name of Engineer, and the name of the U.K. project management representative. The spinal insert will contain only the U.K. Logo, U.K. Project Title, U.K. Project Number, date of submittal and volume number. No insert will be placed in the back cover. To maintain Uniformity, no other information will be accepted on these inserts.

   6). The first page in each volume will be a master Index describing, by division numbers, the information contained in each volume. The page(s) immediately following the master index will be the volume table of contents containing the description and 5 digit division number of all information contained in that volume. All information will be indexed using the 2004 CSI master format 6 digit division numbers. Information will be divided by tabbed inserts with the 6 digit

item numbers printed on the tabs. The pages immediately following the table of contents in each volume will contain the following information in this order.

a). Information Sheet – Project title, project number, location, date of submittal, Architect (name, address, and telephone number), Engineer (name, address, and telephone number), Contractor (name, address, and telephone number), and all Sub-Contractors (name, address, and telephone number).

b). Emergency Contact List – Names and telephone numbers of contact person on warranty items. Any special instructions should also be included on this page.

c). Inspections and Guarantees – Copies of all inspection, guarantee, and warranty certificates with the University of Kentucky named as owner of all equipment and property.

d). Valve Tag List – A record of all valves installed shall be made and shall include the following information: Valve tag number, location of valve, service area, type of service, type of valve, manufacturer, and model number. Refer to Section 20-0553 – Mechanical System Identification.

e). Finish Schedule – A copy of the interior and exterior finish plan schedule listing all finish materials, manufacturers, colors, paint numbers, and use & care instructions.

f). Access panel identification charts as specified in Section 20-0553 – Mechanical System Identification.

g). All equipment required by contract and/or installed by the contractors or sub-contractors must be accompanied by the original copies of its documentation. This documentation must be included in all four sets of manuals and at minimum include: Installation manuals, training manuals, service manuals, parts lists, shop drawings, calibration manuals (if applicable), operation manuals, repair manuals, start up and shut down procedures, and wire lists/diagrams (if applicable). **Under no circumstances will catalog cut sheets be considered acceptable replacements for any of the above items.**

h). Documentation for each piece of equipment shall be indexed as mentioned above and be placed after the appropriate tab. Each tabbed section must contain, as its first sheet, a checklist of all documentation included in that section, location(s) of equipment, and vendor name and address. If more than one type of equipment falls under the same number, a checklist for each type must be present. If the binder includes manuals from any one vendor covering model numbers, the model used must be highlighted.

i). Copies of all shop drawings. The maximum drawing size allowed in binders shall be folded 11” x 17”. These drawings shall be hole punched, re-enforced, and placed with the appropriate information under the correct tab. Drawings placed in pockets of binder are not acceptable. Top of drawings shall be at the top or spine side of the manual. The complete drawing must be viewable without opening rings. All drawings not meeting these size requirements must be bound together, rolled, banded, and submitted alongside manuals.

j). Copies of each system test and balancing record and each system hydronic test and balancing record must accompany manuals submittal. As most such documents are produced using computers, one additional copy of the Test & Balance report should be submitted on a CD.

7). Manuals shall also include the following:

a). CD ROM's of all O&M data. Exploded parts lists shall be included, where available.

b). Internet/WEB page addresses where applicable.

c). Composite electrical diagrams.

d). Flow diagrams.

e). Lubrication instructions.

f). Factory and field test records. (Refer to Test and Balancing in Part 3 of this section.)

g). All drawings in manuals shall have AutoCAD disk file copy transmitted with final record drawings and specifications.

h). Copy of temperature control system record drawings, components, and sequences of operation.

i). Copies of source code for all software and firmware (prom, eprom, rom, other) supplied with any computer, micro controller, or microprocessor.

j). Additional information, diagrams or explanations as designated under respective equipment or systems specification sections.

8. Fire protection system shall be separately bound.
9. Instruct Owner's representative in operation and maintenance of equipment. Instruction shall include complete operating cycle on all apparatus.
10. Furnish O&M Manuals and instructions to Owner prior to request for final payment.

D. Record Documents:
1. Refer to General Conditions of Contract, and Division 01 - Project Record Documents. Prepare complete set of record drawings in accordance with Division 01.
2. Use designated set of prints of Contract Documents as prepared by Architect to mark-up for record drawing purposes.

## 1.7 JOB CONDITIONS

A. Building Access:
1. Arrange for necessary openings in building to allow for admittance of all apparatus.

B. Electrical Coordination:
1. Refer to Section 20 0513 - Motors
2. Contractors for Divisions 20, 21, 22 and 23 shall provide the following items as specified under their respective Division(s) (Division 20, 21, 22 and 23):
a. Motors
b. Electrically powered equipment
c. Electrically controlled equipment
d. Starters, where specified
e. Variable frequency drives, where specified
f. Control devices, where specified
g. Temperature Control wiring
h. Wiring diagrams to Electrical Contractor for apparatus indicating external connection and internal controls.
i. Disconnect devices furnished with units (VFDs, chillers, prepackaged control devices, etc.)
1). Devices shall have an interrupting rating not less than that of the upstream overcurrent device as shown on electrical drawings.
2). Equipment electrical connection points shall be labeled with listed electrical short circuit current rating (SCCR). SCCR shall not be less than interrupting rating of upstream overcurrent device as shown on electrical drawings. SCCR shall be marked on equipment control enclosure in accordance with UL508, or other acceptable, accredited third-party testing agency standards.
3. Electrical Contractor will provide the following devices required for control of motors or electrical equipment, unless noted otherwise.
a. Starters

b. Disconnect devices
c. Control devices:
1). Pushbuttons
2). Pilot lights
3). Contacts
d. Conduit, boxes and wiring for power wiring.
e. Conduit, boxes and wiring for control wiring, except temperature control wiring.

4. Electrical Contractor will make connections, from power source to starter or variable frequency drive and from starter or variable frequency drive, where specified, to motor for ready to operate.
5. Where starters or other similar control devices are furnished by this contractor, they shall be installed by this contractor and wired by Electrical Contractor.
6. Should any change in size, hp rating, voltage, or means of control be made to any motor or other electrical equipment after Contracts are awarded, this contractor shall immediately notify Electrical Contractor of change. Additional costs due to these changes shall be responsibility of this contractor.

C. Cutting and Patching:
1. Refer to General Conditions of the Contract, and Division 01 - Cutting and Patching.
2. Perform cutting and patching required for complete installation of systems, unless otherwise noted. Patch and restore work cut or damaged to original condition. This includes openings remaining from removal or relocation of existing system components.
3. Provide materials required for patching unless otherwise noted.
4. Do not pierce beams or columns without permission of Architect and then only as directed. If openings are required through walls or floors where no sleeve has been provided, hole shall be core drilled to avoid unnecessary damage and structural weakening.
5. Where alterations disturb lawns, paving, walks, etc., replace, repair or refinish surfaces to condition existing prior to commencement of work. This may include areas beyond construction limits.

D. Housekeeping and Cleanup:
1. Refer to Division 01 - Closeout Procedures.
2. As work progresses and/or as directed by Architect, periodically remove waste materials from building and leave area of work broom clean. Upon completion of Work, remove tools, scaffolding, broken and waste materials, etc., from site.

## 1.8 WARRANTY

A. Refer to Division 01 for general warranty requirements.

B. Refer to technical sections for warranty requirement for each system.
1. Where no warranty requirements are called out, warrant equipment, materials, and workmanship to be free from defect as called out in Division 01

C. Warrant that systems will operate without objectionable noise, vibration and uncontrolled expansion.

D. Repair, replace or alter systems or parts of systems found defective at no extra cost to Owner.

E. In any case, wherein fulfilling requirements of any warranty, if this contractor disturbs any work warranted under another contract, this contractor shall restore such disturbed work to condition

satisfactory to Architect and warranty such restored work to same extent as it was warranted under such other contract.

F. Warranty shall include labor, materials, and travel time.

## PART 2 - PRODUCTS

### 2.1 PRODUCT SUBSTITUTIONS

A. Refer to Division 01 - Product Requirements.

## PART 3 - EXECUTION

### 3.1 GENERAL

A. Verify elevations and dimensions prior to installation of materials.

### 3.2 DELIVERY, STORAGE, HANDLING, AND PROTECTION

A. Deliver products to the site under provisions of Division 01.

B. Store and protect products under provisions of Division 01.

C. Store in clean, dry space.

D. Maintain factory wrapping or provide cover to protect units from dirt, water, construction debris, and traffic.

E. Handle in accordance with manufacturer's written instructions.

F. Handle carefully to avoid damage to components, enclosure, and finish. Lift only with lugs provided for the purpose.

G. Protect openings in equipment until connected to system to prevent entry of foreign materials.

### 3.3 FLOOR, WALL, ROOF AND CEILING OPENINGS

A. Coordinate location of openings, chases, furred spaces, etc., with appropriate Contractors. Provide sleeves and inserts that are to be built into structure during progress of construction.

B. Remove temporary sleeves, if used to form openings, prior to installation of permanent materials. Utilize minimum 24 ga galvanized sheet metal for permanent sleeves unless otherwise noted.

C. Provide Schedule 40 carbon steel pipe with integral water stop for steel sleeves required in interior floor slabs.

D. Submit to Structural Engineer for review and approval size and location of core-drilled holes prior to execution.

E. Submit product data and installation details for penetrations of building structure. Include schedule indicating penetrating materials (metal pipe, conduit, etc.), sizes of each, opening sizes and sealant products intended for use.

F. Where penetrations of fire-rated assemblies are involved, seal penetrations with appropriate firestopping systems as specified in Section 20 0573 - Mechanical Systems Firestopping.

G. Submit complete penetration layout drawings showing openings in building structural members including floor slabs, bearing walls, shear walls, etc. Indicate and locate, by dimension, all required openings, including those sleeved, formed or core drilled. Drawings shall be approved prior to preparing openings in structural member.

H. Provide minimum 1" clearance around penetration openings intended for pipe. Where fire resistant penetrations are required, size openings in accordance with written recommendations of firestopping systems manufacturer.

I. Openings for underground pipes passing through foundations or under footings shall have minimum clearance of 1-1/2" to concrete. Do not disturb footing bearing soil.

J. Openings for underground pipe passing through on grade concrete slabs shall have minimum 1/4" clearance to concrete. Seal openings with urethane caulk.

K. Openings for insulated piping shall be sized based on outside diameter of insulation when it is specified or detailed to be continuous through opening.

L. Openings for duct penetrations shall be no more than 1/2" larger on all sides than size of duct or duct including duct insulation, if applicable. Where firestopping systems are required at penetrations, size in accordance with recommendations of firestopping systems manufacturer, but opening shall not exceed 1" average clearance on all sides. Openings for ducts with fire dampers shall be in accordance with fire damper installation requirements.

M. Seal non fire-rated floor penetrations with non-shrink grout equal to Embeco by Master Builders, or urethane caulk, as appropriate.

N. Seal non fire-rated wall openings with urethane caulk.

O. Where penetrations occur through exterior walls into building spaces, use sleeves with integral water stop. For piping having outer surface temperature less than 150°F, use plastic (HDPE) sleeves, similar to PSI Link-Seal Model CS, rated to 150°F. For piping having outer surface temperature 150°F or higher, or where steel sleeves are shown or walls are fire rated, use steel sleeves with hot dip galvanizing, similar to PSI Link-Seal Model WS. Seal annular space between sleeves and pipe with Thunderline "Link-Seal" modular wall and casing seals, or sealing system by another manufacturer approved as equal by Engineer. Where "Link-Seals" are used with insulated pipe, insulation shall be butted against seals on both sides. Sealing system shall utilize Type 316 stainless steel bolts, washers and nuts.

P. In lieu of openings as specified herein penetration systems as manufactured by Pro Set may be used, including sleeve couplings and plug.

Q. If total Pro Set system with Water Guard "CR" is used, opening shall not need additional water proofing or riser clamps.

R. Finish and trim penetrations as shown on details and as specified.

S. Provide chrome or nickel plated escutcheons where piping passes through walls, floors or ceilings and is exposed in finished areas. Size escutcheons to fit pipe and pipe covering for finished appearance. Finished areas shall not include mechanical/electrical rooms, janitors' closets, storage rooms, etc., unless suspended ceilings are specified.

T. Trim duct penetrations exposed in finished areas with 2" wide galvanized or aluminum trim collars properly sized to fit duct. Collars shall be same gauge as duct, prime finish unless noted otherwise. Finished areas shall not include mechanical rooms, janitors' closets, storage rooms, etc., unless suspended ceilings are specified.

## 3.4 EQUIPMENT SHUTOFF VALVES

A. Provide shutoff valves at equipment connected to piping system. Refer to valve section or system section for requirements of valve type.

## 3.5 EQUIPMENT ACCESS

A. Install piping, conduit and accessories to permit access to equipment for maintenance. Relocate piping, equipment or accessories to provide access at no additional cost to Owner.

B. Install equipment with sufficient maintenance space for removal, repair or changes to equipment. Provide ready accessibility to equipment without moving other future or installed equipment or system components.

C. Access doors in walls, chases, or inaccessible ceilings will be provided under Division 08 - Access Doors and Frames, unless otherwise indicated. Access doors for valves, shock stops or other equipment shall provide access for servicing, repairs, and/or maintenance.

D. Provide necessary coordination and information to the Trade Contractor under Division 08 - Access Doors and Frames. This information shall include required locations, sizes, and rough-in dimensions.

E. Provide access doors in walls, chases or above inaccessible ceilings for valves, shock stops, unions or equipment/devices requiring access for servicing, repairs or maintenance, unless otherwise noted. Access frames and doors shall be as manufactured by Milcor, Incorporated, or similar, of style applicable to surface. Provide access doors used in fire rated construction with UL Label. Provide steel, prime coated access doors unless otherwise specified. Provide stainless steel doors in ceramic tile walls, toilet rooms, locker rooms and in areas subject to excessive moisture. Provide access doors of sufficient size to allow complete maintenance. Coordinate location of access doors with General Contractor and rough-in equipment accordingly.

## 3.6 EQUIPMENT SUPPORTS

A. Provide supporting steel not indicated on drawings as required for installation of equipment and materials including angles, channels, beams, hangers, etc.

## 3.7 EQUIPMENT GUARDS

A. Provide equipment guards over belt driven assemblies, pump shafts, exposed fans, and elsewhere as indicated in this Specification or required by Code.

B. Paint equipment guards bright yellow.

C. Equipment guards shall comply with OSHA requirements.

## 3.8 SUPPORT PROTECTION

A. In occupied areas, mechanical rooms and areas requiring normal maintenance access, guard certain equipment to protect personnel from injury.

B. Provide minimum 1/2” thick Armstrong Armaflex insulation or similar product applied with Armstrong 520 adhesive on lower edges of equipment and mechanical supporting devices suspended less than 7 ft above floors, platforms or catwalks in these areas.

C. Protect threaded rod or bolts at supporting elements as described above. Trim threaded rod or bolts such that they do not extend beyond supporting element and devices.

## 3.9 MECHANICAL SYSTEMS IDENTIFICATION

A. Refer to Section 20 0553 - Mechanical Systems Identification

## 3.10 TEST AND BALANCING

A. Tests for equipment, ductwork and piping systems shall be performed as specified in their respective specification sections in accordance with technical requirements noted.

B. Provide equipment required for testing, including fittings for additional openings required for test apparatus.

C. All ductwork and piping inspections and testing shall be successfully completed and approved before application of covering materials.

D. When equipment or systems fail to meet minimum test requirements, replace or repair defective work or material as necessary and repeat inspection and test until equipment or systems meet test requirements. Make repairs with new materials. Caulking of holes or threaded joints is not allowed.

E. Contractor is responsible for certifying in writing equipment and system test results. Certification shall include identification of portion of system tested, date, time, test criteria, test medium and pressure used, duration of test and name and title of person signing test certification document.

F. Maintain copies of certified test results, including those for any failed tests, at project site. At completion of project, include copies of test records and certifications in O&M Manuals.

G. Balancing of various systems shall be in accordance with associated specification sections in addition to requirements noted herein.

## 3.11 START-UP

A. Systems and equipment shall be started, tested, adjusted and turned over to Owner ready for operation. This includes "Owner-Furnished, Contractor-Installed" (OFCI) and "Contractor-Furnished, Contractor-Installed" (CFCI) systems and equipment.

B. Follow manufacturer's pre-start-up check-out, start-up, trouble shooting and adjustment procedures.

C. Contractor shall provide services of technician/mechanic knowledgeable in start-up and check-out of types of systems and equipment on project.

D. Provide start-up services by manufacturer's representative where specified or where Contractor does not have qualified personnel.

E. Coordinate start-up with all trades.

## 3.12 LUBRICATION

A. Upon completion of work and before turning over to Owner, clean and lubricate bearings except sealed and permanently lubricated bearings. Use only lubricant recommended by manufacturer.

B. Contractor is responsible for maintaining lubrication of mechanical equipment under this Contract until Work is accepted by Owner.

## 3.13 CLEANING

A. Clean systems after installation is complete.

B. Clean piping and ductwork both internally and externally to remove dirt, plaster dust or other foreign materials. When external surfaces of piping are rusted, clean and restore surface to original condition.

C. Clean pipeline strainers to restore them to original condition or replace with new strainer elements.

D. Clean equipment and plumbing fixtures as recommended by manufacturers.

E. Thoroughly clean equipment of stains, paint spots, dirt and dust. Remove temporary labels not used for instruction or operation.

F. Provide additional cleaning of individual piping systems and apparatus as hereinafter specified.

G. Provide cleaning to return the CUP back to pre-construction cleanliness.

**END OF SECTION**

# SECTION 20 0513 MOTORS

## PART 1 - GENERAL

### 1.1 RELATED WORK

A. Section 26 2913 - Enclosed Controllers

### 1.2 REFERENCE

A. Work under this Section is subject to requirements of Contract Documents including General Conditions, Supplementary Conditions, and sections under Division 01 General Requirements.

### 1.3 SUBMITTALS

A. Shop Drawings including, but not limited to, the following:
   1. Manufacturer
   2. hp, voltage, phase, hertz, rpm
   3. Motor type
   4. Enclosure type
   5. Frame type
   6. Insulation class
   7. NEMA design designation
   8. Service factor
   9. Nominal efficiency at full load
   10. Power factor at full load
   11. Full load amperes
   12. Bearings
   13. Mountings
   14. Dimensions
   15. Weight

### 1.4 PRODUCT CRITERIA

A. Motors covered by this Specification shall conform to applicable requirements of NEMA, IEEE, ANSI, and NEC Standards and shall be UL Listed where applicable for service specified.

B. Motors shall be designed for conditions in which they will be required to perform; i.e., general purpose, splash proof, explosion proof, standard duty, high torque or other special type as required by equipment manufacturers.

C. Select motors so they do not exceed nameplate rating nor operate into service factor to meet specified duty.

D. Motors located inside air handling units or exposed located in outdoor or wash down environments shall have totally enclosed fan cooled (TEFC) enclosures.

E. Motors shall be furnished for starting in accordance with utility requirements and be compatible with starters specified hereinafter or under Electrical sections of Specifications.
   1. Refer to Section 26 2913 - Enclosed Controllers for reduced voltage starting requirements.

## PART 2 - PRODUCTS

### 2.1 MATERIALS

A. Materials shall be new and guaranteed for service intended.

### 2.2 MOTORS

A. Voltage Ratings
   1. Refer to equipment schedules and specification sections for voltages required.

B. Motors shall be 4 pole (approximately 1750 rpm) unless otherwise noted.

C. Single-phase motors shall be furnished with built-in thermal overload protection.

D. Use NEMA Design B motors, normal starting torque with regreasable ball bearings, and Class B insulation unless specified otherwise or unless manufacturer of equipment on which motor is being used has more stringent requirements.
   1. Bearings shall be rated for minimum AFBMA 9, L-10 life of 26,280 hours (belted) and 100,000 hours (direct-coupled) at full-load.

E. Motors shall be rated continuous duty and have 1.15 service factor unless otherwise noted.

F. Vibration shall not exceed 0.15” per second, unfiltered peak unless otherwise noted.

G. Motors (180 frames and larger) shall have provisions for lifting eyes or lugs capable of safety factor of 5.

H. Full load nominal efficiency of motors 1 hp and larger, except special-purpose motors including 2-speed or multi-speed motors, and rewound motors, shall meet or exceed listed values when tested in accordance with IEEE Standard 112 Method B as defined by NEMA Standard MG 1-12.6C. Efficiency values listed are based on NEMA Premium Efficiency Electric Motors of NEMA MG 1-2011, Table 12-12.

| | Open Drip-Proof Motors | | | Totally Enclosed Fan-Cooled Motors | | |
|---|---|---|---|---|---|---|
| | 1200 rpm | 1800 rpm | 3600 rpm | 1200 rpm | 1800 rpm | 3600 rpm |
| hp | (6 pole) | (4 pole) | (2 pole) | (6 pole) | (4 pole) | (2 pole) |
| 1 hp | 82.5 | 85.5 | 77.0 | 82.5 | 85.5 | 77.0 |
| 1.5 hp | 86.5 | 86.5 | 84.0 | 87.5 | 86.5 | 84.0 |
| 2 hp | 87.5 | 86.5 | 85.5 | 88.5 | 86.5 | 85.5 |
| 3 hp | 88.5 | 89.5 | 85.5 | 89.5 | 89.5 | 86.5 |
| 5 hp | 89.5 | 89.5 | 86.5 | 89.5 | 89.5 | 88.5 |
| 7.5 hp | 90.2 | 91.0 | 88.5 | 91.0 | 91.7 | 89.5 |
| 10 hp | 91.7 | 91.7 | 89.5 | 91.0 | 91.7 | 90.2 |

| | Open Drip-Proof Motors | | | Totally Enclosed Fan-Cooled Motors | | |
|---|---|---|---|---|---|---|
| | 1200 rpm | 1800 rpm | 3600 rpm | 1200 rpm | 1800 rpm | 3600 rpm |
| hp | (6 pole) | (4 pole) | (2 pole) | (6 pole) | (4 pole) | (2 pole) |
| 15 hp | 91.7 | 93.0 | 90.2 | 91.7 | 92.4 | 91.0 |
| 20 hp | 92.4 | 93.0 | 91.0 | 91.7 | 93.0 | 91.0 |
| 25 hp | 93.0 | 93.6 | 91.7 | 93.0 | 93.6 | 91.7 |
| 30 hp | 93.6 | 94.1 | 91.7 | 93.0 | 93.6 | 91.7 |
| 40 hp | 94.1 | 94.1 | 92.4 | 94.1 | 94.1 | 92.4 |
| 50 hp | 94.1 | 94.5 | 93.0 | 94.1 | 94.5 | 93.0 |
| 60 hp | 94.5 | 95.0 | 93.6 | 94.5 | 95.0 | 93.6 |
| 75 hp | 94.5 | 95.0 | 93.6 | 94.5 | 95.4 | 93.6 |
| 100 hp | 95.0 | 95.4 | 93.6 | 95.0 | 95.4 | 94.1 |
| 125 hp | 95.0 | 95.4 | 94.1 | 95.0 | 95.4 | 95.0 |
| 150 hp | 95.4 | 95.8 | 94.1 | 95.8 | 95.8 | 95.0 |
| 200 hp | 95.4 | 95.8 | 95.0 | 95.8 | 96.2 | 95.4 |
| 250 hp | 95.4 | 95.8 | 95.0 | 95.8 | 96.2 | 95.8 |

I. Single-phase motors for hard starting applications including outdoor applications shall be capacitor start type. Motors for fans and pumps located indoors may be split phase or permanent split-capacitor. Motors shall be equipped with permanently lubricated and sealed ball bearings and shall be selected for quiet operation. Motors 1/8 hp and below may be shaded pole type.

1. Refer to individual equipment section for additional requirements or specific type of motors.

J. 3 Ph, 2-speed motors shall be one winding, consequent pole, variable torque type and 1 Ph, 2-speed motors shall be capacitor start capacitor run type.

K. When submersible pumps are specified, each pump shall include in addition to controls specified, all necessary controls, relays, wiring, etc. that may be required for safety features incorporated in motor design. No submersible motor shall be run or activated until all requirements of motor manufacturer's recommendations have been complied with.

## PART 3 - EXECUTION

### 3.1 INSTALLATION

A. Install materials in accordance with drawings, approved Shop Drawings and manufacturer's recommendations.

**END OF SECTION**

# SECTION 20 0520

# EXCAVATION AND BACKFILL

## PART 1 - GENERAL

1.1 DESCRIPTION

A. This Section lists methods and materials for trench excavation and backfill for plumbing piping systems inside the building.

1.2 RELATED WORK

A. Division 31 - Earthwork

1.3 REFERENCE

A. Work under this Section is subject to requirements of Contract Documents including General Conditions of Contract, Supplementary Conditions, and sections under Division 01 General Requirements.

1.4 SUBMITTALS

A. List of materials to be used for backfill.

## PART 2 - PRODUCTS

2.1 FILL MATERIAL

A. Type 1 Fill:
   1. Material from excavation separated from materials, which do not compact by tamping and rolling. No stones larger than 3” and no building, organic, corrosive or frozen materials.

B. Type 2A Fill:
   1. Sand or gravel materials with none larger than 2” and of that portion passing #4 sieve less 5% to pass #200 sieve.

C. Type 2B Fill:
   1. Sand or gravel materials with none larger than 1/2” and of that portion passing #4 sieve less 5% to pass #200 sieve.

D. Type 3 Fill:
   1. Gravel of rounded to sub angular shape, screened, which will pass 0.75” sieve and retained on #4 sieve.

E. Type 4 Fill:
   1. Pit run rock or gravel with maximum stone size of 1”.

F. Type 5 Fill:
   1. Pea gravel, screened, which will pass 0.375” sieve and retained on #4 sieve.

G. Type 6 Fill:

1. Soils Engineer approved fill material, backfilled and compacted beneath building footprint.

## PART 3 - EXECUTION

3.1 PREPARATION

A. Establish grade lines and locations of mains and manholes. Provide necessary stakes and batter boards.

B. Verify invert elevations of existing utilities prior to excavation for new utility piping.

3.2 EXCAVATION

A. Provide excavation for all underground work, including piping, manholes, catch basins, tanks, concrete structures, etc., unless otherwise shown or specified. Lay piping in open trench except when Architect gives written permission for tunneling.

B. Include all necessary clearing; tree removal; grubbing; pavement removal; substructure removal such as walls, footings and piers and all incidental work such as tunneling, sheet piling, shoring, underpinning, pumping, bailing and transportation. Coordinate excavation extending beyond construction limits with Construction Manager and Owner.

C. Blasting is not allowed on this project without written permission of Architect and Owner.

D. Use mechanical methods to remove rock in trenches for piping systems.

E. Include rock excavation in the Bid unless otherwise indicated.

3.3 PIPE INSTALLATION

A. Keep underground piping to proper line and grade and sealed at all times to prevent entrance of animals or foreign matter.

B. Provide bracing and sheet piling as necessary to support trenches. Comply with Local Regulations, applicable provisions of OSHA Regulations on trenching, or with provisions of “Manual of Accident Prevention in Construction” published by Associated General Contractors of America.

C. Under no circumstances lay pipe or install appurtenances in water. Keep trench free from water until pipe joint material has hardened.

D. Presence of ground water in soil or necessity of sheet piling or bracing trenches shall not constitute condition for which any increase may be made in Contract price, except when sheet piling is left in place on written order of Owner, Contract price will be adjusted.

E. Cut off sheet piling left in place not less than 2” below new finished grade. Do not remove sheet piling until trench is substantially backfilled.

F. Place underground piping outside and inside building in open excavated trenches. Where trench bottom does not contain stones larger than 1” in size or where bedrock is not encountered, trench may be excavated to final pipe grade. Where bedrock or stones larger than 1” is encountered, excavate entire length of trench to depth 4” below final pipe grade elevation and provide 4” of pipe bedding material compacted to minimum of 90% Standard Proctor Density consisting of Type 2B, 3 or 5 fill to establish final pipe grade. Shape bedding for clearance for all joints and

fittings, tamped in place and graded evenly to insure uniform bearing for full length of pipe. Do not support piping by blocking, planking or mounding of bedding material.

3.4 BACKFILL

A. Interior:
   1. Backfill inside building only after piping and appurtenances have been inspected and approved. Backfill to 12" above pipe with Type 2B, 3 or 5 fill in 6" layers. Remainder of backfill shall be Type 2A, 2B, 3, 4, or 6 fill in 12" layers.
   2. Install lines passing under foundations with minimum of 1-1/2" clearance to concrete and insure there is no disturbance of bearing soil.
   3. Backfill piping suspended from slab on grade with Type 2B or 5 fill in 6" layers. Same fill materials shall be provided for 12" minimum on each side of pipe.

3.5 ROCK EXCAVATION

A. Consider material over one cubic yard in size encountered during excavation as rock. Rock excavation will be paid as extra if it cannot be removed by 200 net hp crawler tractor with ripper attachment all in good running condition and operated by an experienced individual.

B. Excavate rock to 4" below intended pipe invert.

3.6 FINISHING

A. On completion of trenching and backfilling operations, restore grades to original elevation or to new subgrade elevation.

B. When trenching is through existing areas or beyond constructions limits, replace surfaces to existing conditions.

C. In landscaped areas use 6" of topsoil and sod to match existing elevations, or as otherwise approved by Landscape Architect.

**END OF SECTION**

# SECTION 20 0529 MECHANICAL SUPPORTING DEVICES

## PART 1 - GENERAL

### 1.1 RELATED WORK

A. Section 20 0700 - Mechanical Systems Insulation

B. Section 23 0550 - Vibration Isolation (Spring Hangers and Mounts)

C. Section 23 3114 - Ductwork (for additional duct supports requirements)

### 1.2 REFERENCE

A. Work under this Section is subject to requirements of Contract Documents including General Conditions, Supplementary Conditions, and sections under Division 01 General Requirements.

### 1.3 DESCRIPTION

A. Provide all supporting devices as specified and as required for proper support of piping, ductwork, equipment, materials and systems.

B. Support for all conditions of operation, including variations in installed and operating weight of equipment, piping and ductwork, to prevent excess stress and allow for proper expansion and contraction.

### 1.4 SUBMITTALS

A. Shop Drawings for each piping system for all pipe sizes and all applicable equipment including, but not limited to, the following:
   1. Manufacturer's name
   2. Model numbers
   3. Materials of construction and load ratings (lbs)
   4. Schedule of hangers and support devices with pipe support spacing
   5. Insulated pipe supports along with application chart or table
   6. Insulation protection saddles and weight bearing insulation table
   7. Details and calculations for sizing supplementary steel utilized for trapeze or specially designed supports
   8. Structural attachments, inserts and concrete anchors. Submit ICC-ES Evaluation Report for each type of anchor.
   9. Calculations and drawings for concrete inserts and anchors for each application
   10. Drawings showing specific locations of any weld attachments to structure, including weight supported by such attachments
   11. Drawings showing specific locations of any suspended loads which exceed 100 lbs within joist chord panel to be attached to open web steel joist structural members. Include weight supported by such attachments. (Panel is length of chord between two adjacent diagonal web members at point of connection to chord.)
   12. Equipment mounting devices
   13. Pipe guides and anchors
   14. All other appropriate data

## 1.5 DESIGN CRITERIA

A. Materials and application of pipe hangers and supports shall conform to latest requirements of ANSI/ASME B31 Code for Pressure Piping and MSS Standard Practice SP-58-2009 (Pipe Hangers and Supports Materials, Design, Manufacture, Selection, Application, and Installation), except as supplemented or modified herein.

B. Support materials shall be steel or stainless steel unless specifically indicated.

C. Support devices shall have published load ratings.

D. Unless otherwise indicated, design structural support members and support devices, including couplings, rods, trapeze supports and strut systems, with safety factor in accordance with AISC Manual of Steel Construction, but not less than 2.0.

E. Determine maximum deflection using the following equation.

$$D = \frac{H \text{ or } L}{250}$$

Where D = Max deflection in inches
H = Member height in inches
L = Member length in inches

F. Unless otherwise indicated, hangers, support devices and hardware shall have hot-dipped galvanized finish. Coat cut edges, welds or any damaged finish with galvanized paint.

G. Material in contact with pipe shall be compatible with piping material so that neither shall have deteriorating action on the other. If materials such as copper, stainless steel or other materials are not compatible, provide nonmetallic separation between uninsulated piping and metal supports. Plastic coated steel supports are acceptable.

H. This Contractor is responsible for proper placement and sizing of supporting devices to accommodate insulation thickness and pitching of pipe. Coordinate with Contractor performing work specified in Section 20 0700 - Mechanical Systems Insulation.

I. In addition to hangers specified in this Section, piping connected to pumps, compressors, and similar rotating or reciprocating equipment shall have vibration isolation hangers or supports for distance of 100 pipe diameters or 50 ft away from equipment, whichever is greater.

J. Where piping can be conveniently grouped to allow trapeze type supports, supporting steel shall be by means of standard structural shapes.

K. Hangers and rods shall be plumb when pipelines are at their normal operating temperatures.

L. Unless otherwise indicated, continuous insert channels are not allowed.

M. Punching, drilling, or welding of building structural steel is not allowed unless approved by Structural Engineer.

N. Refer to Structural Documents and ICC-ES Evaluation Report for application of concrete inserts and concrete anchors.

O. Lateral braces shall be designed and detailed to apply loads as directly as possible to structural floor slabs, roof decks, or other building lateral elements. Braces shall not be applied to bottom flanges of steel beams or bottom chords of open web steel joists.

P. Coordinate with General Contractor for any proposed weld attachments to building structure. This may result in use of other welding codes or standards, which may apply to "structural work". Execution of this work may be assigned to General Trades responsible for building structural steel. Cost for this work, however, will remain the responsibility of this Contractor.

Q. Top or bottom chords of open web steel joists may be used to support loads, provided total load within panel does not exceed 100 lbs and load is placed concentric to joist. (Panel is length of chord between two adjacent diagonal web members at point of connection to chord).

## PART 2 - PRODUCTS

### 2.1 STRUCTURAL SUPPORTS

A. Design and provide all supporting steel, not indicated on structural drawings, that is required for installation of mechanical equipment and materials, including angles, channels, beams, connections, etc. to suspend or floor support equipment.

### 2.2 PIPE HANGERS AND SUPPORTS (METALLIC)

A. Manufacturers: Anvil (formerly Grinnell), Erico, Tolco, National Pipe Hanger Corporation, or B-Line, equal to Anvil figures listed. Corresponding MSS Type is indicated where applicable.

B. Hangers/supports for copper pipe where supports directly contact to pipe shall be either plastic, vinyl or epoxy coated.

C. For insulated pipe supports, refer to Insulated Pipe Supports in Part 3 of this Section.

D. Clevis and Roller Type Hangers:

| System | Pipe Size | Clevis | Roller |
|---|---|---|---|
| Hot Pipes with Insulation (120°F and above) | 2” and smaller | 65 (MSS Type-1), 260 (MSS Type-1) | 171 (MSS Type-41), 181 (MSS Type-43) |
| | 2-1/2” to 6” | --- | 171 (MSS Type-41), 181 (MSS Type-43) |
| | 8” and larger | --- | 171 (MSS Type-41), 181 (MSS Type-43) |
| Ambient Bare Pipes (60°F to 119°F) | 2” and smaller | 65 (MSS Type-1), 260 (MSS Type-1) | 171 (MSS Type-41), 181 (MSS Type-43) |
| | 2-1/2” and to 6” | 260 (MSS Type-1), | 171 (MSS Type-41), 181 (MSS Type-43) |
| | 8” and Larger | 295 (MSS Type 3) | |
| Cold Pipes with Insulation (33°F to 59°F) | 2” and smaller | 65 (MSS Type-1), 260 (MSS Type-1) | 171 (MSS Type-41), 181 (MSS Type-43) |
| | 2-1/2” to 6” | 260 (MSS Type-1), | 171 (MSS Type-41), 181 (MSS Type-43) |
| | 8” and Larger | 295 (MSS Type 3) | |

1. For pipe size 2-1/2" and larger, where there is transverse movement at support points due to thermal expansion/contraction, clevis type hangers similar to Anvil Figure 260 (MSS Type-1) may be used if vertical angle of hanger rod is less than 4°.

E. Flat Surfaces (Trapeze, Rack Type):

1. Use structural steel members such as struts, angles, channels and beams to support pipes as required. Select members properly for pipe support types and loading conditions. Refer to Part 1 for design criteria. Submit support details with type of members selected and load calculations. Provide straps, clamps, rollers or slides indicated below at each support point.

| System | Pipe Size | Straps or Clamps | Rollers | Slides |
|---|---|---|---|---|
| Hot Pipes with Insulation (120°F and above) | 2" and smaller | 295 | 171, 181 | --- |
| | 2-1/2" and larger | 295 | 171 or 177(MSS Type-41), 271 (MSS Type-45), 274 (MSS Type-46) | 257 or 436 with 212 or 432 clamps, Type 1, 2 or 3 for longitudinal movement only and Type 4, 5 or 6 for both longitudinal and transverse movement of piping. |
| Ambient Bare Steel Pipes (60°F to 119°F) | 6" and smaller | B-Line BVT | --- | --- |
| | 8" and larger | 137 (MSS Type-24) | | |
| Ambient Bare (Copper) pipes (60°F to 119°F) | all sizes | B-Line BVT | | |
| Cold Pipes with Insulation (33°F to 59°F) | 10" and smaller | 137 (MSS Type-24) | --- | --- |
| | 12" and larger | 432 | --- | --- |

## 2.3 INSULATION PROTECTION SHIELDS

A. Anvil Fig. 167 (MSS Type-40) constructed of galvanized carbon steel. Per the latest edition of Standard MSS SP-58, select shield to accommodate outer diameter of insulation. Shield length and gauge for insulation compression strength not less than 15 psi, shall be as follows:

| Pipe Size | Length | Gauge |
|---|---|---|
| 1/4” thru 3” | 12” | 18 |
| 4” | 12” | 16 |
| 5” and 6” | 18” | 16 |
| 8” thru 14” | 24” | 14 |
| 16” thru 24” | 24” | 12 |

## 2.4 INSULATION PROTECTION SADDLES

A. Anvil Fig. 160 Series (MSS Type-39) constructed of carbon steel or alloy steel plate. Select saddles to accommodate insulation thickness specified in Section 20 0700 - Mechanical Systems Insulation.

## 2.5 WEIGHT BEARING INSULATION INSERTS

A. Insert thickness shall match pipe insulation thickness. Pipe insulation jackets shall be continuous through sections containing inserts.

B. Minimum length of inserts shall be 12”, or 2” longer than insulation protection shields, whichever is longer. Compressive strength and placement of inserts shall be based on weight of pipe and fluid plus 1.5 safety factor.

C. Hot Pipes (120°F and above):

1. High-density calcium silicate insulation (Type H) similar to Johns Manville Thermo-12 or cellular glass insulation (Type G) similar to Pittsburgh Corning Foamglas. Maximum compression strength for load calculation shall be 90 psi.

D. Cold Pipes (59°F and below):

1. Cellular glass insulation (Type G) similar to Pittsburgh Corning Foamglas, maximum compressive strength 90 psi, rigid closed cell insulation (Type PP) similar to Trymer Green by ITW, maximum compressive strength for load calculation 31 psi, or expanded polyisocyanurate insulation (Type P) similar to Trymer 2000XP by ITW, maximum compressive strength for load calculation 24 psi.
2. SNAPP ITZ pre-insulated pipe supports by Mechanical Pipe Shields Mfg or Tru-Balance Insulated Saddles by Buckaroos, Inc. may be used. Pre-insulated pipe supports shall use polyisocyanurate (Trymer 2000 or 4000 or Insul-Phen insulation), with PVC jacket and G90 galvanized steel shield.

## 2.6 PRE-INSULATED PIPE SUPPORTS

A. Pipe Shields, Inc., Bergen Pre-Insulated Pipe Supports, Rilco, or Tri-State Industries equal to Pipe Shields models listed

B. Insulation shall consist of water-resistant calcium silicate of same thickness as adjoining pipe insulation, thermal conductivity not more than 0.38 Btu·in/(hr·ft$^2$·°F) at 75°F mean temperature, minimum density of 13 lb/ft$^3$, and compressive strength not less than 100 psi.

C. Structural inserts shall be water-resistant, high-density calcium silicate with minimum density of 32 lb/ft$^3$ and minimum compressive strength of 600 psi. Structural inserts shall be used as recommended by manufacturer to meet load ratings.

D. Use vapor barrier steel jacket around insulation. Insulation jackets shall be galvanized steel conforming to ASTM A-527. Hanger bearing surface shall consist of galvanized sheet metal insulation protection shield or casing.

E. When recommended by manufacturer, use double layer insulation protection shield at support bearing surface. Insulation shall extend 1” beyond insulation protection shield to maintain vapor barrier integrity.

F. Pre-insulated pipe supports shall be load rated. Load ratings shall be established by pipe support manufacturer based upon testing and analysis in conformance with the latest edition of the following codes and standards: ASME B31.1, MSS SP-58, MSS SP-69, and MSS SP-89.

G. Load tests shall be made on both supporting materials and configurations. All tests shall be performed by independent testing laboratory. Results of pertinent tests shall be available upon request.

H. Unless otherwise indicated, pre-insulated pipe supports shall be as indicated in the following schedule. Model numbers are based on Shaw Pipe Shields, Inc.
   1. Pipe supported on hangers: Models A2000, A4000, A9000, D3000 and D3200
   2. Pipe supported on flat surfaces: Models A2000, A4000, A6000, A7000, A7200, and A7400
   3. Pipe supported on pipe rolls: Models A4000, A6000, A8000, A8200, and A8400
   4. Pipe supported on slides: Model "B" Series
   5. A1000, A3000 or A5000 may be used for hot pipes (120°F and above)

I. Select proper model to conform to pipe service, support style, and support spacing.

J. Submit chart or table indicating selected model along with pipe sizes, rated loads, support device types and support spacing for each piping system.

K. Pipe support spacing shall be in accordance with manufacturer's recommendations, but in no case shall exceed maximum spacing indicated under Hanger and Support Spacing in Part 3 of this Section.

## 2.7 HANGER RODS (METALLIC)

A. Rods shall conform to the latest MSS Standards except as modified herein. Furnish rods complete with adjusting and lock nuts.

B. Rods shall have electroplated zinc or hot dip galvanized finish.

C. Unless otherwise indicated, size rods for individual hangers and trapeze support as indicated in the following schedule. Rod size may be reduced one size for double rod hangers. Total weight of equipment, including valves, fittings, pipe, pipe content and insulation, shall not exceed limits indicated.

| Max. Pipe Size With Single Rigid Rod | Rod Diameter (inches) | Max Load (lbs) of Hanger Rod (Not exceeding 650°F Service Temp.) |
|---|---|---|
| 2” | 3/8 | 730 |
| 3” | 1/2 | 1350 |
| 5” | 5/8 | 2160 |
| 8” | 3/4 | 3230 |
| 12” | 7/8 | 4480 |
| 18” | 1 | 5900 |
| 30” | 1-1/4 | 9500 |

**2.8 BOLTS, NUTS, STUDS AND WASHERS**

A. ASTM A307, electroplated zinc finish

**2.9 ROD ATTACHMENTS**

A. Anvil Fig. 290 (MSS Type-17), galvanized finish

**2.10 U-BOLTS**

A. Anvil Fig. 137 (MSS Type-24), galvanized finish

**2.11 BEAM CLAMPS**

A. Beam Clamps: Anvil Fig. 133/134 (MSS Type-21), 218 (MSS Type-30), 228 (MSS Type-28 or 29) and 292 (MSS Type-28 or 29)

B. Top Beam Clamps: Anvil Fig. 227 (MSS Type-25)

C. C-Clamps: Anvil Fig. 86, 92 or 93 (MSS Type-19 or 23) with set screw and lock nut

**2.12 ADJUSTABLE PIPE SADDLE SUPPORTS**

A. Anvil Fig. 264 (MSS Type-38), galvanized finish. Provide Anvil Fig. 63 Type T stanchion with base, galvanized finish, where applicable.

**2.13 RISER CLAMPS**

A. Anvil Fig. 261 (MSS Type-8), galvanized finish

B. Anvil Fig. CT-121, copper plated carbon steel, plastic coated in area at pipe contact, for bare copper tubing

C. Proset system, proseal plug and fire-fill for sleeved and cored holes.

**2.14 CONCRETE INSERTS (WOODEN FORMED CONCRETE)**

A. Anvil Fig. 281 or 282, or Hilti HCI-WF (MSS Type-18), suitable for rod diameter and weight supported.

## 2.15 CONCRETE INSERTS (METAL DECK FORMED CONCRETE)

A. Anvil Fig. 284, Tolco No. 109 A, B-Line Fig. B3019, Powers Fasteners "Bang-It", Hilti HCI-MD, or MSCO No. MX34.

## 2.16 CONCRETE ANCHORS

A. Manufacturers: Hilti, Powers Fasteners or Red Head

B. Anchors shall be selected, sized, and detailed by Contractor's structural engineer registered in project's jurisdiction, based on project conditions and in accordance with project building code. Calculations and drawings shall be submitted.

C. Anchors shall meet ICC Acceptance Criteria, and ICC-ES Evaluation Reports (ESRs) shall specifically list the current applicable codes.

D. Anchors installed in hardened concrete for purpose of transmitting structural loads from one connected element to another, or for safety related elements such as sprinkler pipes, heavy suspended pipes, and barrier rails shall have ICC-ES report demonstrating anchors have met requirements of AC 193 for mechanical anchors in concrete elements.

E. Post-installed expansion anchors and undercut anchors installed in hardened concrete shall be qualified for strength design and tested according to ACI 355.2. Designs shall be per the requirements of ACI 318, Appendix D.

F. Anchors shall be zinc plated in accordance with ASTM B633.

G. Select anchors with load ratings based on cracked concrete conditions.

## 2.17 METAL FRAMING SUPPORT SYSTEM (STRUT SYSTEM)

A. Manufacturers: Unistrut, B-Line Strut Systems, Anvil-Strut, Power-Strut, Erico, Superstrut, Kindorf, Hilti, and Hydra-Zorb

B. Channels shall have epoxy paint or electroplated zinc finish.

C. Channels shall not be lighter than 12 ga.

## 2.18 PIPE ROOF PENETRATION PROTECTIONS

A. Manufacturers: Roof Products & Systems, ThyCurb or Vent Products equal to Roof Products & Systems "RPS-Pipe Portals" consisting of 12" OD prefabricated roof curb, laminated acrylic coated ABS plastic curb cover with EPDM protective rubber cap and stainless steel clamp.

## 2.19 PIPE GUIDES

A. Unless otherwise indicated, guides shall be Pipe Shields, Bergen Pre-Insulated Pipe Supports, or Rilco equal to Pipe Shields "B" Series B3000, B4000, B7000, B8000, selected by load and movement.

## 2.20 PIPE ANCHORS

A. Unless otherwise indicated, anchors shall be no-moment type, Shaw Pipe Shields or Rilco equal to Shaw Pipe Shields Insulated Positive Pipe Anchor Model C3000 or C4000 Series, sized to meet anchor forces shown with minimum safety factor of 3.0.

B. Contractor may fabricate anchors of steel sections suitable for location of installation and for withstanding anchor forces shown with minimum safety factor of 3.0.

## PART 3 - EXECUTION

### 3.1 INSTALLATION

A. Install supports to allow for free expansion of piping. Support piping from building structural members using concrete inserts, beam clamps, ceiling plates, wall brackets, or floor stands. At no time shall hangers and supports overload building structural members. Fasten ceiling plates and wall brackets securely to structure and test to demonstrate adequacy of fastening.

B. Select and size building attachments properly in accordance with MSS Standards and manufacturer's published load rating information.

C. Coordinate hanger and support installation to properly group piping of all trades.

D. Suspend piping hangers by means of hanger rods. Perforated band iron and flat wire (strap iron) are not allowed.

E. Piping and ductwork shall be supported independently from other piping or ductwork.

F. Pipe hangers and supports shall not penetrate vapor barrier of pipe insulation.

G. Do not support equipment, piping or ductwork from metal roof decking or ceiling grid.

H. Install adequate supports so as not to over stress either piping or equipment to which piping is connected.

I. Refer to Section 20 0000 - General Mechanical Requirements for requirements of personnel injury protection guards for supporting devices.

### 3.2 HANGER AND SUPPORT SPACING

A. Space pipe hangers and supports for horizontal pipe accordance with the following schedule, with exceptions as indicated herein:

B. Steel Pipe (Standard Weight and Extra Strong):

| Pipe Size | Max Spacing |
|---|---|
| 1-1/4” and smaller | 7’-0” |
| 1-1/2” | 9’-0” |
| 2” | 10’-0” |
| 2-1/2” | 11’-0” |
| 3” | 12’-0” |
| 4” | 14’-0” |
| 6” | 17’-0” |
| 8” | 19’-0” |
| 10” and larger | 20’-0” |

C. Copper Tube (Unless Otherwise Noted):

| Pipe Size | Max Spacing |
|---|---|
| 3/4” and smaller | 5’-0” |
| 1” to 1-1/4” | 6’-0” |
| 1-1/2” to 2-1/2” | 8’-0” |
| 3” and larger | 10’-0” |

D. Cast Iron Pipe:
   1. Maximum hanger and support spacing shall be 10 ft for all pipe sizes. Provide minimum of one hanger per pipe section close to joint on barrel, at each pipe fitting, at change of direction and branch connections.
   2. Support Cast Iron No-Hub pipe as recommended in CISPI Publication "Cast Iron Soil Pipe and Fittings Handbook, Chapter IV - Installation of Cast Iron Soil Pipe and Fittings."

E. Maximum spacing shown above may be restricted by strength of attachment to building structure. Submit data with calculations with published load ratings showing attachment to be utilized and maximum spacing allowable for that type of attachment and pipe size.

F. Spacing less than indicated above may be required to conform to building structure design or loading limitations.

G. If pipe size changes between support points, maximum spacing shall be based on the smaller pipe size.

H. If trapeze hangers are used to support multiple services, spacing shall be based on the most restrictive pipe size and material on trapeze hanger.

I. Install supports for vertical piping and anchors as recommended by pipe manufacturer.

J. Place hangers and supports to meet requirements of Section 23 2116 - Pipe and Pipe Fittings or specific pipe system sections, with regard to pitch for drainage and venting and clearance between services.

K. Hangers and supports shall bear on outside of insulation when pipes are to be insulated.

L. Place hangers and supports within 1 ft of each fitting, such as elbows and tees, and at each valve, strainer, and other piping specialty for piping 4” and larger.

M. Place hanger or support at first elbow upstream of pump inlet and first elbow downstream of pump outlet.

## 3.3 RISER SUPPORTS

A. Insulated Piping:
   1. Unless otherwise indicated, support vertical piping as indicated below:
      a. Within CUP, support vertical piping when passing through a floor.
      b. For Hot Pipes with Insulation (120°F and above), use spring hangers at top of riser. Use spring hangers for minimum 3 supports/hangers away from top elbows. Piping will be supported at the bottom to allow for thermal expansion upwards.
      c. Spring hangers are specified in Section 23 0550 - Vibration Isolation.

B. Non-insulated Piping:

1. Unless otherwise indicated, maximum vertical support spacing for ambient bare steel and cast iron pipes shall be 15 ft.
2. Maximum vertical support spacing for other piping including copper tubing and plastic piping shall be 10 ft.
3. Install riser clamps and intermediate supports as required.
4. Rest riser clamps on floor or on pipe sleeve.
5. Non-insulated piping above 120°F such as steam vents shall be supported per insulated piping requirements.

## 3.4 INSULATION PROTECTION SHIELDS

A. Install insulation protection shields at support points as specified under Insulated Pipe Supports.
   1. Use one shield (bottom) for clevis hanger.
   2. Use 2 shields (top and bottom) for roller hanger/support or strap/clamp support. Apply 2 metal straps to hold top and bottom shields onto insulation jacket.

## 3.5 INSULATION PROTECTION SADDLES

A. Install saddles at support points as specified under Insulated Pipe Supports. Tack weld saddle to pipe by tacking center of each point of contact. Pack saddle cavity with insulation of same type as specified for piping system.

B. Where depth of single saddle is less than specified insulation thickness, provide additional saddle tack welded to first saddle to equal insulation thickness.

## 3.6 INSULATED PIPE SUPPORTS

A. Install insulated pipe support at each support point of insulated pipe. Provide insulation protection shields except where saddles are used.

B. Pipe Size 1-1/2” and Smaller:
   1. Use insulation protection shields. Pipe insulation specified in Section 20 0700 - Mechanical Systems Insulation shall be continuous through support points.

C. Pipe Size 2” and Larger:
   1. Use pre-insulated pipe supports. Refer to Part 2 for acceptable products.
   2. In lieu of pre-insulated pipe supports, field-assembled insulated pipe supports may be used. If used, submit application details including materials, thickness, compression strength, load bearing surfaces, load calculations of support assembly and total pipe weight based on support spacing.
   3. Field-assembled insulated pipe supports shall consist of weight bearing insulation inserts and insulation protection shields.
   4. Insulation protection saddles may be used in lieu of assembled insulated pipe supports on roller hangers/supports for hot water pipes, low pressure steam and steam condensate pipes.

## 3.7 PIPE FLOOR SUPPORTS

A. Unless specifically shown otherwise, use adjustable pipe saddle supports with associated stanchion similar to Anvil Fig. 264/63. Select supports properly for weight and height of pipe stand.

### 3.8 CONCRETE INSERTS

A. Concrete insert application, size, loading, and placement shall be this Contractor's responsibility.

B. Coordinate with General Contractor for placement of inserts before concrete pour. Minimize use of inserts and anchors after concrete pour.

### 3.9 CONTINUOUS INSERT CHANNELS

A. Mount continuous insert channels when used for pipe support on 8'-0" maximum centers and 2'-0" from corners.

### 3.10 BEAM CLAMPS

A. Provide locknut for hanging rod at clamp.

B. C-clamps are allowed for rod size 3/8" or smaller and only for static loading such as air piping, cold water piping, fire protection piping and, other similar piping and ductwork. C-clamps are not allowed for hot water piping and steam and steam condensate piping, except hot water runouts to terminal heating devices.

C. C-clamps are not allowed for open web steel joist application.

D. C-clamps are not allowed for seismic application.

### 3.11 TRAPEZE SUPPORTS

A. Construct trapeze supports with struts, angles, or channels and hang them by inserts or welded beam attachments and rods.

B. Determine trapeze supports spacing by the smallest pipe on trapeze.

### 3.12 CONCRETE ANCHORS

A. Anchor application, size, and placement shall be this Contractor's responsibility.

### 3.13 PIPE GUIDES

A. Install where shown on drawings.

### 3.14 PIPE ANCHORS

A. Install anchors where shown on drawings or in conjunction with expansion joints, loops and swing joints as required to allow proper expansion and contraction of piping without damage to structure, equipment or piping.

B. Do not anchor piping to concrete block walls, wood, or partition walls.

**END OF SECTION**

# SECTION 20 0553 MECHANICAL SYSTEMS IDENTIFICATION

## PART 1 - GENERAL

### 1.1 REFERENCE

A. Work under this Section is subject to requirements of Contract Documents including General Conditions, Supplementary Conditions, and sections under Division 01 General Requirements.

### 1.2 SUBMITTALS

A. Product Data: For identification materials and devices

B. Valve Schedules: For each piping system

C. Samples: Of color, lettering style, and graphic representation required for each identification material and device.

## PART 2 - PRODUCTS

### 2.1 EQUIPMENT LABELS

A. Plastic Labels for Equipment:
   1. Material and Thickness: Multilayer, multicolor, plastic labels for mechanical engraving, 1/8 inch (3.2 mm) thick, and having predrilled holes for attachment hardware.
   2. Letter Color: Black.
   3. Background Color: White.
   4. Maximum Temperature: Able to withstand temperatures up to 160 deg F (71 deg C).
   5. Minimum Label Size: Length and width vary for required label content, but not less than 2-1/2 by 3/4 inch (64 by 19 mm).
   6. Minimum Letter Size: 1/4 inch (6.4 mm) for name of units if viewing distance is less than 24 inches (600 mm), 1/2 inch (13 mm) for viewing distances up to 72 inches (1830 mm), and proportionately larger lettering for greater viewing distances. Include secondary lettering two-thirds to three-fourths the size of principal lettering.
   7. Fasteners: Stainless-steel rivets or self-tapping screws.

B. Label Content: Include equipment's Drawing designation or unique equipment number, Drawing numbers where equipment is indicated (plans, details, and schedules), plus the Specification Section number and title where equipment is specified.

C. Equipment Label Schedule: For each item of equipment to be labeled, on 8-1/2-by-11-inch (A4) bond paper. Tabulate equipment identification number and identify Drawing numbers where equipment is indicated (plans, details, and schedules), plus the Specification Section number and title where equipment is specified. Equipment schedule shall be included in operation and maintenance data.

### 2.2 STENCILS

A. Stencils: Prepared with letter sizes according to ASME A13.1 for piping; minimum letter height of 1-1/4 inches (32 mm) for ducts; and minimum letter height of 3/4 inch (19 mm) for access panel and door labels, equipment labels, and similar operational instructions.
   1. Stencil Material: Fiberboard or metal.

2. Stencil Paint: Exterior, gloss, acrylic enamel black unless otherwise indicated. Paint may be in pressurized spray-can form.
3. Identification Paint: Exterior, acrylic enamel in colors according to ASME A13.1 unless otherwise indicated.

### 2.3 UTILITY SERVICE MARKERS

A. Markers shall consist of bronze plates, ground and polished, and marked to identify the service. Markers shall also be stamped with arrows indicating the direction the service extends. A typical marker detail is shown on the Drawings.

B. Markers locating services at the building shall be installed in masonry or concrete walls 2' above grade. Markers locating services elsewhere on the site shall be installed in concrete walks or curbs, or in 6" x 6" steel reinforced concrete posts as detailed.

### 2.4 VALVE TAGS

A. Valve Tags: Stamped or engraved with 1/4-inch (6.4-mm) letters for piping system abbreviation and 1/2-inch (13-mm) numbers.
   1. Tag Material: Brass, 0.032-inch (0.8-mm) minimum thickness, and having predrilled or stamped holes for attachment hardware.
   2. Fasteners: Brass wire-link or S-hook. Wire shall not be used as a method for connecting the tags to the valve. The tags shall be installed after insulation has been installed.

B. Valve Schedules: For each piping system, on 8-1/2-by-11-inch (A4) bond paper. Tabulate valve number, piping system, system abbreviation (as shown on valve tag), location of valve (room or space), normal-operating position (open, closed, or modulating), and variations for identification. Mark valves for emergency shutoff and similar special uses.
   1. Valve-tag schedule shall be included in operation and maintenance data.

## PART 3 - EXECUTION

### 3.1 GENERAL

A. After painting and/or covering is completed, identify equipment and piping as indicated. Locate identification as conspicuously as possible except where such would distract from finished area.

B. Where markers are used in high heat applications or exposed to harsh chemical or acid environments, specifically select marker materials for those applications.

C. Clean piping and equipment surfaces of substances that could impair bond of identification devices, including dirt, oil, grease, release agents, and incompatible primers, paints, and encapsulants.

### 3.2 PIPING SYSTEM IDENTIFICATION

A. Install pipe identification on each system. Place flow directional arrows at each pipe identification location.

B. Identify all piping not less than once every 25 ft, not less than once in each room, at each branch, adjacent to each access door or panel, at each valve and where exposed piping passes through walls and floors. Space every 10 ft in mechanical rooms.

a. All mechanical piping, shall be labeled, according to the following system:

University of Kentucky Standard Abbreviations for Mechanical Piping

| Type of Service | Markings | Color |
|---|---|---|
| High pressure steam & return (over 76 psig) | H.P.S. & H.P.R. | Safety Red |
| Medium pressure steam & return (21 psig to 75 psig) | M.P.S. & M.P.R. | International Orange |
| Low pressure steam & return (0 psig to 20 psig) | L.P.S.& L.P.R. | Safety Orange |
| Steam Vents | S.V.V. | Galvano |
| Chilled water supply & return | C.W.S. & C.W.R. | Galvano |

C. Identify piping by stenciling. Height of lettering shall be same as pipe diameter up to maximum of 1" in height. When finished color of piping is dark, stenciling shall be on white background.

D. Identify piping with marker system.
   1. For "strap-on" type, ensure marker is fitted snugly to pipe or pipe insulation surface with sufficient straps.

E. Stenciled Pipe Label Option: Stenciled labels may be provided instead of manufactured pipe labels, at Installer's option. Install stenciled pipe labels with painted, color-coded bands or rectangles on each piping system.
   1. Identification Paint: Use for contrasting background.
   2. Stencil Paint: Use for pipe marking.

F. Locate pipe labels where piping is exposed or above accessible ceilings in finished spaces; machine rooms; accessible maintenance spaces such as shafts, tunnels, and plenums; and exterior exposed locations as follows:
   1. Near each valve and control device.
   2. Near each branch connection, excluding short takeoffs for fixtures and terminal units. Where flow pattern is not obvious, mark each pipe at branch.

## 3.3 VALVE AND DAMPER IDENTIFICATION

A. Identify valves with brass tags bearing system identification and valve sequence number in 1/2" black characters. Attach tag to valve body with brass jack chain and "S" hook for brass tag and SS jack chain or SS braided wires with swag sleeves and "S" hook for stainless steel tag. Non-metallic fasteners are not allowed. Valves and dampers located above the ceiling shall also be identified with a tag, similar to Seton-Ply Discs, attached to the ceiling grid under the equipment or to access doors in non-accessible ceilings.

B. Valve numbers shall be prefixed with corresponding piping system identification in 1/4" black letters.

C. Identify valves and dampers with the following abbreviations and tag colors:

| Equipment | Abbreviation | Color |
|---|---|---|
| Valve | V. | Yellow |

D. Furnish typewritten valve schedule indicating valve number, fixtures, equipment or areas served by each numbered valve and incorporate in O&M Manuals.

E. Furnish typewritten framed chart under glass or clear plastic indicating fixtures, equipment or areas served by each numbered valve and mount same as directed by Architect.

## 3.4 STEAM TRAP IDENTIFICATION

A. Identify steam traps as specified for valve identification.

## 3.5 EQUIPMENT IDENTIFICATION

A. Identify major equipment, including, chillers, pumps, etc.

B. Identify equipment with laminated plastic nameplates.

C. Identify control equipment and panels with laminated plastic nameplates.

D. Nameplate Markings:
   1. Identify model number, size, capacity, electrical characteristics, serial number, along with other items scheduled for equipment on drawings.
   2. Indicate motor horsepower, voltage, phase, cycles, RPM, full load amps, locked motor amps, frame size, manufacturer's name and model number, Service Factor, Power Factor, efficiency, minimum circuit amps, minimum feeder conductor size, disconnect or fuse size, refrigerant, and other pertinent information.

E. Locate motor nameplates for easy reading. Relocate or provide new nameplates on motors if original nameplates are not located for easy reading.

**END OF SECTION**

**SECTION 20 0573 - MECHANICAL SYSTEMS FIRESTOPPING**

## PART 1 - GENERAL

### 1.1 REFERENCE

A. Work under this Section is subject to requirements of Contract Documents including General Conditions, Supplementary Conditions, and sections under Division 01 - General Requirements.

### 1.2 SCOPE

A. Work under this Section includes but is not limited to the following:
   1. Penetrations through fire-resistance-rated floor, roof, walls, partitions, and smoke barriers including openings containing pipes, ducts and other penetrating items.
   2. Penetrations through non-fire-resistance-rated floors where vertical service riser penetrates 3 or more floors.

### 1.3 SYSTEM PERFORMANCE REQUIREMENTS

A. Firestopping systems shall be UL Classified for the application and correspond to those indicated by reference to designations listed by UL Fire Resistance Directory.

B. Firestop materials and methods shall conform to requirements of Local Code Authority Having Jurisdiction.

### 1.4 SUBMITTALS

A. Manufacturer's specifications and product data for each type of product including composition and limitations, documentation of UL Certification for firestopping systems to be used and manufacturer's installation instructions.

B. Material safety data sheets provided with product delivered to job-site.

### 1.5 QUALITY ASSURANCE

A. Installer Qualifications: Firm experienced in installing penetration firestopping similar in material, design, and extent to that indicated for this Project, whose work has resulted in construction with a record of successful performance. Qualifications include having necessary experience, staff, and training to install manufacturer's products per specified requirements.

B. A manufacturer's direct representative to be on-site during initial installation of firestop systems to train appropriate contractor personnel in proper selection and installation procedures.

### 1.6 DELIVERY, STORAGE AND HANDLING

A. Deliver products to project site in original, unopened containers or packages with intact and legible manufacturers' labels identifying product, type and UL Label where applicable.

B. Store materials to prevent deterioration or damage due to moisture, temperature changes, contaminants or other causes.

C. Handle in accordance with recommended procedures, precautions or remedies described in material safety data sheets as applicable.

### 1.7 PROJECT CONDITIONS

A. Do not install firestopping when ambient or substrate temperatures are outside limits permitted by firestopping manufacturers or when substrates are wet because of rain, frost, condensation or other causes.

B. Install and cure firestopping per manufacturers' written instructions using natural ventilation or, where this is inadequate, forced-air circulation.

### 1.8 COORDINATION

A. Coordinate construction of openings and penetrating items to ensure that penetration firestopping is installed according to specified requirements.

B. Coordinate sizing of sleeves, openings, core-drilled holes, or cut openings to accommodate penetration firestopping.

C. Notify Owner's testing agency at least seven (7) days in advance of penetration firestopping installations; confirm dates and times on day preceding each series of installations.

## PART 2 - PRODUCTS

### 2.1 MANUFACTURERS

A. 3M, Hilti, Tremco, Nelson Firestop Products, Specified Technologies, Inc., or RectorSeal Corp.

B. Pro-set firestop products may be used for specific applications, provided products meet requirements in this Section.

C. HydroFlame water/firestop sleeves may be used for specific applications provided products meet requirements in this Section.

### 2.2 MATERIALS

A. Use only firestop products that have been UL 1479, ASTM E814 Tested for specific fire-rated construction conditions conforming to construction assembly type, penetrating item type, annular space requirements and fire-rating involved for each separate instance.

B. VOC Content: Penetration firestopping sealants and sealant primers shall comply with the following limits for VOC content when calculated according to 40 CFR 59, Subpart D (EPA Method 24):

1. Sealants: 250 g/L
2. Sealant Primers for Nonporous Substrates: 250 g/L
3. Sealant Primers for Porous Substrates: 775 g/L

C. Where UL classified systems are indicated, they refer to system numbers in UL's "Fire Resistance Directory" under product Category XHEZ.

D. Materials shall be red in color.

### 2.3 MIXING

A. For those products requiring mixing before application, comply with through-penetration firestop system manufacturer's written instructions for accurate proportioning of materials, water (if required), type of mixing equipment, selection of mixer speeds, mixing containers, mixing time, and

other items or procedures needed to produce products of uniform quality with optimum performance characteristics for application indicated.

## PART 3 - EXECUTION

### 3.1 EXAMINATION

A. Examine substrates and conditions, with Installer present, for compliance with requirements for opening configurations, penetrating items, substrates, and other conditions affecting performance of firestopping.

B. Proceed with installation only after unsatisfactory conditions have been corrected.

### 3.2 PREPARATION

A. Clean out openings immediately before installing firestopping to comply with manufacturer's written instructions.

B. Prime substrates where recommended in writing by manufacturer using that manufacturer's recommended products and methods. Confine primers to areas of bond; do not allow spillage and migration onto exposed surfaces.

C. Provide masking and temporary covering to prevent soiling of adjacent surfaces by firestopping materials.

### 3.3 INSTALLATION

A. Install penetration firestopping to comply with manufacturer's written installation instructions and published drawings for products and applications.

B. Install forming materials and other accessories of types required to support fill materials during application. After installing fill materials and allowing materials to fully cure, remove forming materials and other accessories not indicated as permanent components of firestop systems.

C. Avoid multiple penetrations of common fire barrier opening. Seal each penetration in accordance with manufacturer's UL installation details. When multiple penetrations are unavoidable, seal openings with appropriate UL Classified firestopping systems.

### 3.4 FIELD QUALITY CONTROL

A. Inspecting Agency: Owner will engage a qualified independent inspecting agency to inspect Through-Penetration Firestop Systems and to prepare test reports.

1. Inspecting agency will state in each report whether inspected Through-Penetration Firestop Systems comply with or deviate from requirements.

B. Provide certification by Installer that all Through-Penetration Firestop Systems have been firestopped in accordance with applicable Building Codes of this State.

C. Proceed with enclosing Through-Penetration Firestop Systems with other construction only after inspection reports are issued.

D. Where deficiencies are found, repair or replace Through-Penetration Firestop Systems so they comply with requirements.

### 3.5 IDENTIFICATION

A. Identify Through-Penetration Firestop Systems with preprinted metal or plastic labels. Attach labels permanently to surfaces adjacent to and within 150mm(6") of firestopping edge so labels will be visible to anyone seeking to remove penetrating items or firestop systems. Use mechanical fasteners or self-adhering type labels with adhesives capable of permanently bonding labels to surfaces on which labels are placed. Include the following information on labels:
   1. The words: "Warning--Through-Penetration Firestop System—Do Not Disturb. Notify Building Management of Any Damage."
   2. Contractor's name, address, and phone number.
   3. Designation of applicable testing and inspecting agency.
   4. Date of installation.
   5. Manufacturer's name.
   6. Installer's name.

## 3.6 CLEANING AND PROTECTION

A. Clean surfaces adjacent to sealed holes and joints to be free of excess firestop materials and soiling as Work progresses.

B. Provide final protection and maintain conditions during and after installation that ensure that penetration firestopping is without damage or deterioration at time of Substantial Completion. If, despite such protection, damage or deterioration occurs, immediately cut out and remove damaged or deteriorated penetration firestopping and install new materials to produce systems complying with specified requirements.

**END OF SECTION**

# SECTION 20 0700 MECHANICAL SYSTEMS INSULATION

## PART 1 - GENERAL

### 1.1 RELATED WORK

A. Section 20 0529 - Mechanical Supporting Devices

### 1.2 REFERENCE

A. Work under this Section is subject to requirements of Contract Documents including General Conditions, Supplementary Conditions, and sections under Division 01 General Requirements.

### 1.3 DESCRIPTION

A. Provide insulating materials and accessories as required for mechanical systems as specified below.

B. Insulating products delivered to construction site shall be labeled with manufacturer's name and description of materials.

### 1.4 DEFINITIONS

A. Concealed areas, where indicated in this Section, shall apply to shafts, furred spaces and space above finished ceilings, inaccessible tunnels and crawl spaces. All other areas, including walk-through tunnels, shall be considered as exposed.

B. Unless otherwise indicated, unit of thermal conductivity is $Btu \cdot in/(h \cdot ft^2 \cdot °F)$.

C. Interstitial spaces are considered as concealed areas.

### 1.5 SUBMITTALS

A. Shop Drawings for each piping system for all pipe sizes, each ductwork system, and all equipment including, but not limited to, the following:
   1. Manufacturer's name
   2. Schedule of insulating materials
   3. Insulation material and thickness
   4. Jacket
   5. Adhesives
   6. Fastening methods
   7. Fitting materials
   8. Intended use of each material
   9. Manufacturer's data sheets indicating density, thermal characteristics, temperature ratings
   10. Insulation installation details (manufacturer's installation instruction/details, Contractor's installation details, MICA plates where applicable)
   11. All other appropriate data

### 1.6 DELIVERY, STORAGE AND HANDLING

A. Insulation material shall be delivered to project site in original, unbroken factory packaging labeled with product designation and thickness. Shipment of materials from manufacturer to installation

location shall be in weather-tight transportation. Protect insulation materials from moisture and weather during storage and installation. Protect insulation material against long exposure to UV light from sun.

## PART 2 - PRODUCTS

### 2.1 MANUFACTURERS

A. Insulation:
   1. Owens Corning, Johns Manville, Manson, Knauf or CertainTeed similar to product indicated except where product of manufacturers not listed above is specifically identified for special type of insulation.

B. Coatings, Mastics, Sealants and Adhesives:
   1. Foster, Childers, Vimasco, Miracle or Pittsburgh Corning

### 2.2 MATERIALS

A. Products used for or related to air conditioning and ventilating systems shall conform to NFPA 90A possessing flame spread index of not over 25 and smoke developed index no higher than 50.

B. Unless otherwise indicated, all products, material itself or on composite basis, shall have flame spread index not more than 25 and smoke developed index not more than 50, when tested in accordance with ASTM E-84 or UL723.

C. Pipe insulation which is not located in air plenum may have flame spread rating not over 25 and smoke developed rating no higher than 450 when tested in accordance with UL 723 and ASTM E84.

D. Insulation applied on stainless steel shall meet requirements of ASTM C795 and NRC 1.36.

### 2.3 INSULATION

A. Insulation materials shall be fire retardant, moisture and mildew resistant, vermin proof, and suitable to receive jackets, adhesives and coatings as indicated.

B. Glass fiber insulation shall be of inert inorganic material, non-corrosive to mechanical surfaces.

C. Insulating cement shall be Quick-Cote by PK Insulation MFG Co. or Ryder GP, with dry density of no more than 38 $lb/ft^3$ thermal conductivity of 0.96 at 400°F mean temperature, and service temperature to 1200°F.

D. Filling and finishing cement shall be Super-Stik by PK Insulation MFG Co., or Ryder MW, with dry density of no more than 24 $lb/ft^3$, thermal conductivity of 0.74 at 500°F mean temperature, and service temperature to 1900°F.

E. Type A Insulation (Closed Cell Elastomeric Thermal Insulation):
   1. Minimum nominal density of 6 $lb/ft^3$, thermal conductivity not more than 0.25 at 75°F mean temperature, maximum water vapor transmission of 0.06 perm-inch and suitable for temperatures from -70 to 220°F, Armacell Model AP/Armaflex, K-Flex USA, or Aeroflex Model Aerocel.

F. Type P Insulation (Expanded Polyisocyanurate):
   1. Continuously molded rigid polyisocyanurate foam insulation meeting requirements of ASTM C-591, with thermal conductivity of not more than 0.19 at 75°F mean temperature, minimum

nominal density of 2 lb/ft$^3$, minimum compressive strength of 24 psi, maximum water vapor transmission of 4.0 perm-inch, maximum water absorption of 2% by volume, and suitable for temperature of plus 300°F down to -297°F. Insulation shall have factory-applied jacket with SSL. Trymer 2000 XP by ITW or approved equal.

G. Type R Insulation (Rigid Glass Fiber):
   1. Minimum nominal density of 3 lb/ft$^3$ with thermal conductivity of not more than 0.23 at 75°F mean temperature.
   2. Pipe insulation shall be premolded type in accordance with ASTM C547 Type I, suitable for temperatures to 850°F, Johns Manville Micro-Lok, Owens Corning Fiberglas ASJ/SSL-II or Knauf Earthwool 1000° pipe insulation.
   3. Duct and equipment insulation shall be in accordance with ASTM C612, Type IA and IB, suitable for temperatures to 450°F, Johns Manville Spin-Glas Type 814, Owens Corning Type 703.
   4. Pipe and tank wrap faced with specified jacket may be used for equipment and round ducts insulation, provided that it meets all insulation characteristics requirements stated above and maintains same R-value as specified.

## 2.4 JACKETS

A. Jacket puncture resistances shall be based on ASTM D-781 test methods. Vapor barrier permeance ratings shall be based on ASTM E-96 Procedure A.

B. Type A-1 Jacket (Aluminum Roll Jacketing):
   1. Factory fabricated 0.016” thick, ASTM B209, Type 3003 or 3105, stucco embossed aluminum jacket with integrally bonded moisture barrier. Moisture barrier shall consist of 40 pound kraft paper coated with minimum 1 mil thick polyethylene film or 3 layers of polymer films with total thickness of 3 mil
   2. Fitting covers shall be factory fabricated from not lighter than 0.024" thick, Type 3003 or 1100 aluminum.
   3. Jacketing system shall be similar to ITW Pabco/Childers or Insul-Mate by RPR Products, Inc.

C. Type E-1 Jacket:
   1. Glass Cloth: Untreated glass fiber, 8 oz/sq. yd. weight.

D. Type P-1 Jackets:
   1. Heavy-duty, fire retardant material with glass fiber reinforcing and self-sealing lap. Jacket shall have neat, white Kraft finish suitable for painting, with burst strength of 1.5 Joules(50 beach units) minimum and tensile strength 45 lbs/in minimum. Vapor barrier shall be adhered to inner surface of jacket. Permeance shall not exceed 0.02 perm. Owens Corning "ASJ-SSL", Johns Manville "ASJ" and Knauf ASJ+.

E. Type P-2 Jacket:
   1. One piece, 20 mil thick, pre-molded type, UV protected; Zeston 2000 with Perma-Weld jacket adhesive. Jacket color as selected by owner to match existing utility color scheme. Painting is not allowed

F. Type S-2 Jacket:
   1. Saran Vapor Retarder Film with self-sealing lap (SSL), ASTM C-755 and C-1136, 6 mil thickness. Permeance shall not exceed 0.01 perms, equal to Dow Saran 540 CX.

2. Elbows, fittings, valves and butt joints shall be wrapped with 3 layers of Dow Saran 520 Vapor Retarder tape.
3. Provide PVC jacket (Type V-1) over Saran tapes for exposed elbows, fittings and valves.

G. Type V-1 Jacket:
1. Fire retardant and UV resistant PVC in minimum [20 mil (0.02")][30 mil (0.03")] thickness consisting of preformed fitting covers, preformed end terminations, and sheet material for straight runs of pipe. Jacketing system shall be suitable for indoor and outdoor application in temperature range of -35°F to 150°F. Material when installed according to manufacturer's instructions shall provide complete vapor barrier and readily cleanable surface while meeting Federal CGMP requirements.
2. Jacketing system shall be equal to Johns Manville Zeston/Perma-Weld System or Speedline Smoke Safe. Similar product by PROTO will be acceptable.

## 2.5 ADHESIVES, MASTIC, COATINGS, SEALANTS, AND REINFORCING MATERIALS

A. Adhesives and sealants shall comply with the South Coast Air Quality Management District (SCAQMD) Rule #1168; VOC limits shall comply with Indoor Environmental Quality Section, Credit IEQ-4.1.

B. Coatings and mastics shall comply with VOC limits set forth by Green Seal BS-11 and comply with the South Coast Air Quality Management District (SCAQMD) Rule #113; VOC limits shall comply with Indoor Environmental Quality Section, Credit IEQ-4.2.

C. Products shall be compatible with surfaces and materials on which they are applied, and shall be suitable for use at operating temperatures of systems to which they are applied.

D. Products shall be fire retardant, moisture resistant and mildew resistant and vermin proof.

E. Vapor Barrier Mastic: Below ambient insulation. Water vapor permeance shall be less than 0.08 perms at 45 mils dry film thickness per ASTM F1249.
1. Foster 30-33
2. Childers CP-33
3. Vimasco 749

F. Weather Barrier Breather Mastic: Above ambient insulation. Permeance shall be greater than 1.0 perms at 1/16” dry film thickness per ASTM E96.
1. Foster 46-50 Weatherite
2. Childers CP-10/CP-11 Vi Cryl
3. Vimasco WC-5

G. Lagging Adhesive/Coatings: Indoors applications used in conjunction with canvas/glass cloth.
1. Foster 30-36
2. Childers CP-50 AMV1
3. Vimasco 713

H. Metal jacketing sealant for aluminum jacketing:
1. Foster 95-44 Elastolar
2. Childers CP-76 Chil Byl
3. Pittsburgh Corning 727

I. Insulation joint sealant for Type P insulation:

1. Foster 95-50 Flextra
2. Childers CP-76 Chil Byl
3. Pittsburgh Corning CW Sealant

J. Glass fiber fabric reinforcing shall be 10 x 10 mesh similar to Childers Chil Glas #10 or Foster Mast A Fab.

K. Wire mesh reinforcing shall be 22 ga, 1" galvanized.

L. Insulation cement shall be ANSI/ASTM C195, hydraulic setting mineral wool.

M. Finishing cement shall be ASTM C449.

N. Butt joint and longitudinal joint adhesive for Type A insulation shall be Armstrong 520, Rubatex 373, Childers CP-82 or Foster 85-75.

O. Weather-resistant protective finish for Type A insulation shall be equal to Armstrong WB Armaflex finish or Foster 30-64 elastomeric coating.

## 2.6 METAL BANDS AND WIRES

A. Aluminum bands shall be 0.5" x 0.020" up to 48" diameter and 0.75" x 0.020" over 48" diameter.

B. Stainless steel bands shall be 0.5" x 0.015" or 0.75" x 0.015".

C. Stainless steel wires shall be 16 ga.

## 2.7 INSULATION FASTENERS

A. Insulation fasteners shall be cup head weld pins, galvanized low carbon steel, minimum 12 ga (0.105") pins.

B. Washer edge shall be beveled.

C. Fasteners shall be stainless steel for stainless steel ductwork application.

D. Insulation fasteners using adhesive are not allowed.

## 2.8 REMOVABLE INSULATING BLANKETS

A. Custom designed removable, reusable, flexible, blanket thermal insulation system.

B. Acceptable Manufacturers: Thermal Energy Products, Inc., Advanced Thermal Corp., Temptec and Remco Technology, Inc.

C. Removable insulation system shall be custom designed for each individual item to provide close contour fit. Overlapping seams and gaps are not acceptable.

D. Removable insulation shall be designed to overlap adjoining pipe insulation by 2".

E. Insulation: Minimum 2" thick, 2.4 lb/ft$^3$ density, 1000°F continuous service temperature thermal insulating wool; Owens Corning Fiberglass or equal.

F. Interior and Exterior Fabric: Minimum weight 17.5 oz/sq yd silicone rubber coated fiberglass cloth.

G. Securement: Blanket seams shall be closed with buckle and strap assembly (D ring closure).

H. Identification/Tagging: Label each removable insulation device with plastic or 304 stainless steel tag with raised letters. Tag as directed by Owner.

## PART 3 -

## PART 3 - EXECUTION

### 3.1 APPLICATION

A. Provide insulation and jackets as indicated in the following schedule. The schedule applies to both exposed and concealed applications unless noted otherwise:

Piping System

| Service | Jacket Type | Insulation Type | Insulation Thickness According to Pipe Size | | | |
|---|---|---|---|---|---|---|
| | | | 2" and less | 2-1/2" - 6" | 8" - 10" | 12" and Larger |
| Low Pressure Steam and Condensate (201-250°F) | A-1 or P-2 | R | 1-1/2" | 2" | 2-1/2" | 3" |
| Continuous and Boiler Blow Down | A-1 or P-2 | R | 1-1/2” | 2” | 2-1/2” | 2-1/2” |
| Steam Vent Piping located within 8’ above floor | A-1 or P-2 | R | 1" | 1" | 1" | 1" |
| Steam Vent Piping | A-1 or P-2 | R | 1" | 1" | 1" | 1" |
| Domestic Cold Water | A-1 or P-2 | R | 1" | 1" | 1" | 1" |
| Soft Water | A-1 or P-2 | R | 1" | 1" | 1" | 1" |

Equipment System

| Service | Jacket Type | Insulation Type | Insulation Thickness |
|---|---|---|---|
| Air Separators & Water Filters (Chilled Water) | | A | 1" |
| Continuous Blowdown Heat Exchanger | E-1 | R | 2” |
| Blowoff Tank | E-1 | R | 2” |

B. Exposed piping in any room and all piping in boiler or mechanical rooms shall have an 8-ounce canvas jacket applied over the fiberglass factory ASJ/SSL jacketing to further protect the insulation from abuse. This jacketing must be properly applied with lagging adhesive, such that the outer

surface is smooth and free of wrinkles. The canvas jacketing in all mechanical areas is to be prepared for painting, and then painted according to the University of Kentucky standard piping color coding. All chilled water piping insulation shall be completely sealed so that a perfect vapor barrier is achieved.

C. For chilled water only, equivalent thickness of closed cell foam (type A) insulation may be used. Where possible, insulation tubes are to be slipped over the carrier pipe (not slit). Joints and seams are to be neat and sealed. Closed cell foam is also to be used for exposed drains and refrigerant piping.

D. Calcium Silicate insulation is preferred over fiberglass in mechanical and heating plant applications, where piping is more subject to abuse. Insulation in mechanical areas must be protected with an 8 oz. canvas jacket applied with lagging adhesive.

E. Insulate all surfaces not requiring constant access.

F. Provide removable insulation for surfaces requiring periodic access.

G. Insulate all surfaces creating a burn hazard.

## 3.2 INSTALLATION - GENERAL

A. All insulation installation methods shall be performed in accordance with the latest edition of National Commercial and Industrial Insulation Standards published by MICA (Midwest Insulation Contractors Association) and manufacturer's installation instructions, except as modified in this Section of specifications.

B. Install products with good workmanship, with smooth and even surfaces. Use full-length factory-furnished material where possible. Do not use scrap pieces.

C. Apply insulation only on clean, dry surfaces, after all rust and scale have been removed and testing of systems has been completed. Do not insulate any section of system that must be pressure tested until after it has been successfully tested. Any removal and reinstallation to correct system defects prior to end of guarantee period shall be accomplished at no expense to Owner.

D. Install insulating materials with necessary joints and terminations, to permit easy access and removal of equipment sections where inspection, service or repair is required, and to allow for expansion.

E. Where possible longitudinal joints in jackets shall face toward wall or ceiling.

F. Apply insulation to each pipe or duct individually. Common insulation applied to adjacent pipes or ducts will not be accepted.

G. Unless otherwise indicated, pipe and duct insulation shall be continuous through walls and floors.

H. Where multiple layers of insulation are used, stagger and secure each layer with metal bands.

I. Where penetrations occur through fire-rated walls, partitions, or floors, provide fire seal as specified in Section 20 0000 - General Mechanical Requirements and Section 20 0573 - Mechanical Systems Firestopping.

J. Insulate the following systems for complete vapor barrier protection:
   1. Chilled Water
   2. All equipment with surface temperature below 65°F

K. Apply Type A insulation for insulation and jackets requiring vapor barrier protection where specified insulations are cut for mounting sensors, control devices, parts of valves, devices or components which extend out from specified insulation to prevent condensation.

L. Insulation shall meet at minimum the following specification (UK Standards):
   1. Non-Asbestos Glass mat, type E needled fiber.
   2. Temperature maximum of 450°F, Maximum water vapor transmission of 0.00 perm, and maximum moisture absorption of 0.2 percent by volume.
   3. Jacket Material: Silicon/fiberglass compressed as required to give maximum 130F surfacetemperature depending on fluid medium in piping.
   4. Construction: One-piece jacket body with three-ply braided pure Teflon or Kevlar thread and insulation sewn as part of jacket.
   5. Sewn lock stitch with a minimum 4 to 6 stitches per inch. The thread must be able to withstand the skin temperatures without degradation.
   6. Hog rings, staples and wire are not are not acceptable methods of closure. Velcro straps alone are not acceptable unless written permission from UK (hook & loop method required).
   7. No raw cut jacket edges shall be exposed.
   8. Jackets shall be fastened using hook and loop (Velcro) straps
   9. Provide a permanently attached Aluminum or stainless steel nameplate on each jacket to identify its location, size and tag number.
   10. The insulation shall be designed to minimize the convection current in the space between the hot metal surface and the inner layer of insulation. To this end, during jacket fabrication, the layers of insulating mat shall be placed in an overlapping pattern.
   11. Insulation must be sewn as integral part of the jacket to prevent shifting of the insulation.
   12. Insulation thickness: As required for Touch Temperature Exterior of all jacket < 130F.

**3.3** GLASS FIBER FABRIC COVERING (TYPE E-1 JACKET)

A. Glass fiber fabric shall be fitted without wrinkles.

B. Glass fiber fabric shall be sized immediately upon application with lagging adhesive and shall be capable of drying within 6 h.

C. Apply adhesive and coating in accordance with manufacturer's recommendations.

D. All seams shall overlap not less than 2”.

**3.4 PIPING, VALVE AND FITTING INSULATION**

A. Apply insulation to pipe, unions, flanges, fittings, valves and piping specialties with butt joints and longitudinal seams closed tightly. Valve insulation shall cover entire valve body including bonnets and packing nuts.

B. Laps on factory-applied jackets shall be 2" minimum width firmly cemented with lap adhesive, or shall be pressure sealing type lap.

C. Cover joints with factory furnished tape (3" minimum width) to match jacket. Cement firmly with lap adhesive. On systems requiring a vapor barrier (ASJ), vaporseal all longitudinal and butt joints ASJ/Saran seams with 4” wide coat of vapor barrier mastic.

D. Where staples are used, they shall be on 6" maximum centers. When used for systems requiring vapor barrier, cover lap and staples with finish coat of vapor barrier mastic.

E. For finishing of insulated pipe fittings and valves where surface temperature of insulation is not higher than 125°F, one piece PVC fitting covers, minimum thickness of 20 mil, may be used. Fitting covers located in mechanical rooms within 8 ft above floor shall be 30 mil thickness. Johns Manville Zeston 2000 PVC, PROTO Fitting Covers, or similar by other manufacturers listed. Where fitting and valve insulation requires vapor barrier, seal joints of PVC covers with vapor barrier adhesives. Insulation type, R-value and density of insulation used at fittings shall match those of adjacent piping. Install insulation at pipe fittings and valves completely prior to applying PVC covers.

F. Where terminations of pipe insulation are required, insulation shall have tapered ends, built up and finished as specified for fittings.

G. For pipes 1-1/2" and smaller, install specified pipe insulation and jacket continuous through hanger or support locations. Install insulation protection shields to protect insulation from compressing.

H. For pipes 2" and larger, where manufactured pre-insulated pipe supports are used at hanger or support locations, extend insulation to insulated pipe supports. Where vapor barrier is required, this Contractor shall be responsible for continuity of vapor barrier at insulated pipe supports. Use 3" wide vapor barrier tape on hot and cold systems at pipe supports.

I. For pre-insulated pipe supports and insulation protection shields, refer to Section 20 0529 - Mechanical Supporting Devices.

J. For Contractor-fabricated anchors, secure insulation directly to pipe surface and extend insulation up anchor for distance of 4 times insulation thickness. For pre-insulated anchors, cover entire surface of anchors with Type A insulation. Where applicable, take special care to assure vapor seal at anchor.

K. Where mechanical grooved pipe connections are used in piping system, insulate couplings as specified for pipe.

L. Piping, fittings and valves not to be insulated:
   1. Valves furnished with removable insulation/jacket
   2. Steam system traps

## 3.5 EQUIPMENT INSULATION

A. Install removable insulation where access is required for cleaning, repair and inspection, including pump heads and strainers. Construct removable insulation with Type A insulation for cold equipment and Type R insulation with V-1 jacket for hot equipment. Do not apply bonding adhesive to equipment surface.

B. Provide removable insulating blankets on expansion joints.

C. Do not insulate over equipment nameplates or ASME stamps. Bevel and seal insulation at these locations.

D. Water chiller insulation shall include insulation of evaporator shell, water boxes and other miscellaneous piping and/or equipment as directed by equipment supplier. Provide removable insulation with Type A insulation at chiller water boxes. Verify that chillers are fully charged with refrigerant before insulating.

E. Equipment not to be insulated:
   1. Equipment furnished with factory insulation.

## 3.6 PROTECTIVE INSULATION SHIELD (A-1 JACKET) FOR PIPE JACKETS EXTERIOR TO BUILDING

A. Unless otherwise indicated, install shields (A-1 jacket) around insulated pipe and fittings exterior to building. Seal water and vapor tight at terminations.

B. Longitudinal overlap shall be at least 2" wide with vapor barrier sealant.

C. Secure jacketing with 3/4" wide 0.015" stainless steel or 3/4" wide 0.020" aluminum bands and wing seals on maximum 18" centers.

## 3.7 TYPE G INSULATION (CELLULAR GLASS)

A. Install cellular glass insulation system in strict accordance with manufacturer's installation instructions.

B. Steam and Steam Condensate Piping (with Type A-1 jackets):
   1. Apply insulation to piping with all joints dry and tightly fitted without voids. Do not use glue on joints.
   2. Secure insulation to piping with 1" wide, high tensile strength, fiber reinforced strapping tape similar to Scotch Brand Filament Tape and stainless-steel wire over tape. Apply tape on equal spacing such that there are 2 rounds of tape per insulation section. Overlap tape minimum 50%.
   3. Apply aluminum jackets over insulation.
      a. Seal water and vapor tight at terminations.
      b. Longitudinal overlap shall be at least 1/8" wide bead with metal jacketing sealant.
      c. Secure jacketing with 3/4" wide 0.015" stainless steel or 3/4" wide 0.020" aluminum bands and wing seals on maximum 18" centers. Provide minimum of 2 bands per section.

## 3.8 TYPE P INSULATION (POLYISOCYANURATE)

A. Install Type P insulation with specified insulation jacket in accordance with manufacturer’s installation recommendations. Insulation shall be tightly butted and free of voids and gaps at joints. Use 3" wide tape at butt joints with minimum 1.25 times circumference wrapping. Apply insulation joint sealant in longitudinal and butt joints.

B. Install pre-fabricated tight-fitting insulation pieces on fittings, elbows, tees and valves.

C. Insulation at fittings and valves shall be the same thickness as on pipe section.

D. Replace Type P insulation and jacket with Type R insulation of same thickness with Type P-1 jacket at penetration of fire rated walls and floor slabs where fire stopping system is required.

**END OF SECTION**

# SECTION 220000 GENERAL PLUMBING REQUIREMENTS

## PART 1 - GENERAL

1.1 DESCRIPTION

A. Specification requirements defined in Division 20 of this Specification apply to, and are in addition to the work associated with equipment, systems, materials, and installation requirements specified in Division 22. Contractor shall provide the requirements specified in Division 20 to obtain complete systems, tested, adjusted, and ready for operation.

1.2 RELATED WORK

A. Section 20 0000 - General Mechanical Requirements

B. Section 20 0529 - Mechanical Supporting Devices

C. Section 20 0553 - Mechanical Systems Identification

D. Section 20 0700 - Mechanical Systems Insulation

## PART 2 - PRODUCTS

2.1 NOT APPLICABLE TO THIS SECTION.

## PART 3 - EXECUTION

3.1 NOT APPLICABLE TO THIS SECTION.

**END OF SECTION**

# SECTION 22 1118 WATER DISTRIBUTION SYSTEM

## PART 1 - GENERAL

### 1.1 DESCRIPTION

A. This Section covers interior domestic cold water and softwater.

B. All components shall comply with NSF 61-G or NSF-372 to be compliant with requirement for lead content of ≤0.25% maximum weighted average.

### 1.2 RELATED WORK

A. Section 20 0529 - Mechanical Supporting Devices

B. Section 20 0553 - Mechanical Systems Identification

C. Section 20 0700 - Mechanical Systems Insulation

### 1.3 REFERENCE

A. Work under this Section is subject to requirements of Contract Documents including General Conditions, Supplementary Conditions, and sections under Division 01 General Requirements.

### 1.4 QUALITY ASSURANCE

A. Order pipe with each length marked with manufacturer's name or trademark and type of pipe; with each shipping unit marked with purchase order number, metal or alloy designation, temper, size, and supplier's name.

B. Installed material not meeting specification requirements must be replaced with material that meets these Specifications without additional cost to Owner.

### 1.5 DELIVERY, STORAGE, AND HANDLING

A. Promptly inspect shipments to ensure material is undamaged and complies with specifications.

B. Cover pipe to prevent corrosion or deterioration while allowing sufficient ventilation to avoid condensation. Do not store materials directly on grade. Protect pipe, tube, and fitting ends from damage. End caps shall remain in place. Protect fittings, flanges, and unions by storage inside or by durable, waterproof, above ground packaging.

C. Offsite storage agreements will not relieve Contractor from using proper storage techniques.

D. Storage and protection methods must allow inspection to verify products.

E. Before shipping, piping shall be cleaned, free of rust and scale, and chemically treated to protect inside of pipe from rusting, and furnished with end caps.

### 1.6 SUBMITTALS

A. Manufacturer's technical data for the following:
   1. Pipe
   2. Fittings

3. Joints
4. Valves
5. Unions and Flanges
6. Dielectric fittings

B. Shop Drawings on items specified herein.

**PART 2 - PRODUCTS**

2.1 MATERIALS

A. Materials as specified shall be new unless otherwise noted.

2.2 DOMESTIC COLD WATER (UPSTREAM OF DIELECTRIC UNION)

A. Provide pipe and fitting type to match existing at point of connection.

2.3 DOMESTIC COLD WATER (DOWNSTREAM OF DIELECTRIC UNION)

A. Pipe: Type L hard drawn seamless copper tubing, ASTM B88.

B. Joints: Soldered with grade HB lead-free solder (lead content not more than 0.1 percent); ASTM B32, ANSI/AWS A5.8; J. W. Harris, Bridgit.

C. Fittings: Wrought copper, soldered ends; ANSI B16.22.

D. Flanges: 150 psi, cast bronze; ANSI B16.18.

2.4 SOFTENED WATER

A. 2" and Smaller:
1. Pipe: Type L hard drawn seamless copper tubing, ASTM B88.
2. Joints: Soldered with grade HB lead-free solder (lead content not more than 0.1 percent); ASTM B32, ANSI/AWS A5.8; J. W. Harris, Bridgit.
3. Fittings: Wrought copper, soldered ends; ANSI B16.22.
4. Unions: Forged steel, socket weld, steel to steel seat, ground joint, 3000 psi; ASTM A105, ANSI B16.11.

B. 2-1/2” and Larger:
1. Pipe: Schedule 10S, butt welded, non-polished; ASTM A312, Grade TP3O4L and ANSI B36.19.
2. Joints: Butt-welded without backrings.
3. Fittings: S10, 304 stainless steel, butt welded; ASTM A403, A403WP and ANSI B16.9.
4. Flanges: 150 psi, butt welded, 304 stainless steel; ANSI B16.5.

C. Bolts and Nuts: Alloy steel bolt studs threaded full length, ANSI Class 2A threads with heavy hex nuts; ASTM A193 Grade B7, ASTM A194 Class 2H ANSI B18.2.2.

2.5 UNIONS AND FLANGES

A. General:

1. Unions, flanges and gasket materials to have pressure rating of not less than 150 psig at 180°F.

B. Copper (2-1/2" and Smaller):
1. Wrought copper union, Nibco Figure 733. Mueller Brass equal.

2.6 VALVES

A. Refer to 23 21 18 Valves.

2.7 DIELECTRIC FITTINGS

A. Insulating nipple, metal casing, inert thermoplastic lining, Clearflow dielectric fitting by Perfection Corporation or Victaulic Style 47.

B. Dielectric unions 2" and smaller with iron female pipe thread to copper solder joint or brass female pipe thread end connections, non-asbestos gaskets and pressure rating of not less than 175 psig at 180°F. Watts Regulator Company, Lochinvar, Wilkins or Epco Sales, Inc.

**PART 3 - EXECUTION**

3.1 INSTALLATION

A. Install pipe and fittings in accordance with reference standards, manufacturer's recommendations and recognized industry practices.

B. Maintain piping system in clean condition during installation. Remove dirt and debris from assembly of piping as work progresses. Cap open pipe ends where left unattended or subject to contamination.

C. Include connections to plumbing fixtures, to equipment by others, and to equipment requiring water. Provide proper backflow and back siphonage protection to safeguard potable water system from contamination.

D. Lay out water system so as to conform to intent of drawings. Coordinate piping with building features and work of other trades. Plans indicate, general routing, provide additional offsets as required. Install piping with necessary swing joints and offsets to allow for expansion. Install shut-off valves on branch lines near mains to avoid long dead-leg branches when valves are closed. Install water piping plumb and square with building. Pitch water pipe to drain with drain valves at low points.

E. Install shut-off valves where indicated and at base of risers to allow isolation of portions of system for repair. Do not install water piping within exterior walls.

F. Provide protective sleeve covering of elastomeric pipe insulation where copper or steel piping is embedded in masonry or concrete.

G. Provide dielectric fittings between dissimilar piping materials.

H. Do not route piping through transformer vaults or above transformers, panelboards, or switchboards, including required service space for this equipment, unless piping is serving this equipment.

I. Install valves and piping specialties, including items furnished by others, as specified and/or detailed. Provide access to valves and specialties for maintenance. Make connections to

equipment, fixtures and systems installed by others where same requires piping services indicated in this Section.

J. Install water pipe using proper pipe and fittings. Use reducing fittings for changes in pipe size.

## 3.2 COPPER TUBING

A. Copper tubing shall be installed per Copper Development Association guidelines in addition to methods specified herein.

B. Soldered Copper Joints:
   1. Use non-acidic and lead free flux on cleaned pipe and fittings for soldered joints.
   2. Cut tube square, remove burrs from exterior of tube and ream interior of tube before assembly.
   3. Fill joints with solder by capillary action. Solder shall cover joint periphery. Wipe joint clean.
   4. Apply heat carefully to prevent damage to pipe, fittings and valves.
   5. Follow manufacturer's recommendations when heating valves and equipment for soldered connections.

## 3.3 DIELECTRIC UNIONS AND FLANGES

A. Install dielectric unions or flanges at points where copper-to-steel pipe connection is required in domestic water systems.

B. Install unions on equipment side of shutoff valves for items such as: water heaters, water softeners, pumps, filters, and similar equipment requiring periodic replacement.

## 3.4 CLEANING

A. Flush and clean piping prior to testing. Remove corrosion by mechanical or chemical means. Use chemicals that are non-toxic.

## 3.5 TESTING

A. Refer to Testing paragraph of Section 20 0000 - General Mechanical Requirements.

B. Water test system may be applied to system in its entirety or in sections. Test piping with water to pressure of 100 psi for 2 h. No decrease in pressure allowed. Provide pressure gauge with shutoff and bleeder valve at highest point of system tested. Inspect joints in system under test.

C. Defective work or material shall be replaced or repaired as necessary and inspection and test repeated. Repairs shall be made with new materials. No caulking of threaded joints or holes will be allowed.

D. Do not conceal pipe until satisfactorily tested.

E. Testing with air will not be allowed.

## 3.6 BALANCING

A. Balance water distribution system. Adjust control valves for proper operation. Set balancing valves to maintain flow through heat exchanger as indicated on the drawings.

**END OF SECTION**

**SECTION 22 1314 SANITARY WASTE AND STORM DRAINAGE SYSTEMS**

# PART 1 - GENERAL

## 1.1 DESCRIPTION

A. This Section includes materials and methods for sanitary waste and vent, clearwater waste and vent, storm drainage, and overflow storm drainage piping systems within and including piping to 5 ft outside building wall.

## 1.2 RELATED WORK

A. Section 20 0513 - Motors

B. Section 20 0520 - Excavation and Backfill

C. Section 20 0529 - Mechanical Supporting Devices

## 1.3 REFERENCE

A. Work under this Section is subject to requirements of Contract Documents including General Conditions, Supplementary Conditions, and sections under Division 01 General Requirements.

## 1.4 QUALITY ASSURANCE

A. Order piping with each length marked with manufacturer's name or trademark and type of pipe; with each shipping unit marked with purchase order number, metal or alloy designation, temper, size, and supplier's name.

B. Installed material not meeting specification requirements must be replaced with material that meets these specifications without additional cost to Owner.

## 1.5 DELIVERY, STORAGE, AND HANDLING

A. Promptly inspect shipments to insure material is undamaged and complies with Specifications.

B. Cover pipe to prevent corrosion or deterioration while allowing sufficient ventilation to avoid condensation. Do not store materials directly on grade. Protect pipe, tube, and fitting ends from damage. End caps shall remain in place. Protect fittings by storage inside or by durable, waterproof, above ground packaging.

C. Offsite storage agreements will not relieve Contractor from using proper storage techniques.

D. Storage and protection methods must allow inspection to verify products.

## 1.6 SUBMITTALS

A. Manufacturer's technical data for the following:
   1. Pipe and fittings
   2. Joints
   3. Cleanouts
   4. Sewage ejectors
   5. Fiberglass sump basins

6. Sump cover
7. Trench Drains

## PART 2 - PRODUCTS

### 2.1 MATERIALS

A. Materials herein specified shall be new, unless otherwise noted.

### 2.2 PIPE, FITTINGS, AND JOINTS

A. Interior Above Ground:
   1. Cast Iron (3" and larger):
      a. Pipe: Hubless cast iron pipe, ASTM A-888, CISPI 301, NSF certified and marked with collective trademark of Cast Iron Soil Pipe Institute or receive prior approval by Engineer
      b. Fittings: Hubless cast iron fittings, ASTM A-888, CISPI 301, NSF certified and marked with collective trademark of Cast Iron Soil Pipe Institute or receive prior approval by Engineer
      c. Joints: Heavyweight couplings with 0.060" thick stainless steel clamps, FM 1680 Class 1, ASTM Standard C-1540 Mission Heavyweight, Husky Series 4000, Ideal Tridon "HD", or Clamp-All Hi-Torq 125
   2. Copper (3" and smaller):
      a. Pipe: Type L copper tube, ASTM B88
      b. Fittings:
         1). Cast copper drainage fittings (DWV), ANSI B16.23
         2). Wrought copper drainage fittings (DWV), ANSI B16.29
      c. Joints: Lead free (<0.2%) solder, ASTM B32; flux, ASTM B813

### 2.3 VALVES

A. Pump Discharge Check Valves:
   1. Acceptable Manufacturers: Hammond, Milwaukee, Nibco and Stockham with indicated features and equal to model listed
   2. Size 2" to 4", Horizontal Installation:
      a. Cast iron body, swing check, bronze disc and ring, brass pin, Class 125, threaded ends, Nibco T-918-B
   3. Size 6" and Larger, Horizontal Installation:
      a. Cast iron body, swing check, cast iron disc with bronze disc face rings or bronze disc, brass pin, Class 125, flanged ends, Nibco F-918-B
   4. Size 2-1/2" and Larger, Vertical Installation:
      a. Cast iron body, swing check, bronze disc to 4" and cast iron disc with bronze disc face rings or bronze disc for 5" and up, lever and spring operator, brass pin, Class 125, flanged ends, Nibco F-918-BLS
   5. Size 4" and smaller:
      a. Acceptable manufacturers: Chemtrol, Ipex, Spears, or approved equal
      b. PVC body, swing check, EPDM seals, flanged ends. Spears 4423-(size)

B. Pump Discharge Isolation Valves:
   1. Ball Valves:

a. Acceptable Manufacturers: Apollo, Hammond and Nibco with indicated features and equal to model listed

2. Butterfly Valves:
   a. Acceptable Manufacturers: Crane or Nibco with indicated features and equal to model listed
   b. Size 4” and larger:
      1). Wafer Type: Ductile iron body, aluminum bronze disc, EPDM liner, 316 4106 stainless steel stem, brass collar bushings, copper upper and lower bushings, (lower, upper and collar), 200 psi CWP pressure rating, lever handle through 6”, gear operator 8” and larger, Nibco WD2000, Crane Quartermaster 42-B-S-Z

## 2.4 CLEANOUTS

A. Josam, Mifab, Smith, Wade, Watts or Zurn, equal to number listed in Drains and Cleanout Schedule.

B. Provide recessed, solid brass, cleanout plugs where fittings are used as cleanouts. Provide taper-thread plug with Teflon tape thread wrap.

## 2.5 TRENCH DRAINS

A. Acceptable Manufacturers: Josam, Mifab,J.R.Smith, Wade, Zurn, or approved equal

B. Presloped Channel: Polymer concrete trench drain system with ductile iron edge rail, 14 inch wide channel brute extra heavy duty polymer concrete channel with ductile iron rails. Secured ductile iron slotted. Provide with no-hub connection. Based of design J.R SMITH 9879

C. Refer to schedule on drawings for drain model.

## 2.6 SEWAGE EJECTOR: (SE-1)

A. Acceptable pump manufacturers: Weil, Sulzer, Aurora/Hydromatic, Bell and Gossett ITT, Gould, Myers, and Zoeller

B. Acceptable control manufacturers: See Water, SJE-Rhombus, Hydromatic and Zoeller, Weil pump

C. Pumps shall be heavy duty 4” vertical discharge wastewater sewage ejector type constructed with bronze lower sleeve bearings cast iron impeller and S.S. shafts. Pumps shall be provided as a packaged system. Pumps, controls and accessories shall be supplied by one source to maintain consistency and uniformity of the system.

D. Motors shall be NEMA design B, filled with non-toxic dielectric oil. Motors shall meet requirements of Section 20 0513 - Motors.

E. Pump shall be of capacity and motors shall be of electrical service as indicated in equipment schedules on drawings.

F. Pump controls shall include:
   1. Double (one On, one Off) UL Listed float switches
   2. NEMA 1 duplex enclosure indoor alarm panel with warning light, horn, silent switch, test switch and high level float switch, UL Listed
   3. Control panel with HOA switch, pump run light, resettable overload heaters, NEMA 1, enclosure

4. Pump alternator and alarm panel with HOA switch, run light and resettable overload heaters for each pump; warning light; horn; silent switch; test switch; labeled terminal switch and devices; auxiliary dry contacts for remote alarm at the BAS; NEMA 1 enclosure.
5. Class 1, Group D, Division 1 explosion proof rated controls and switches
6. Elapsed run time meters
7. Refer to Section 26 2913 - Enclosed Controllers for starter requirements.

G. Pump accessories shall include:
1. NEMA 1 junction box
2. Dual mechanical seals, seal leak detector probe and warning light in control panel
3. Explosion proof, Class 1, Group D, Division 1 motor
4. Unions

**2.7** SEWAGE EJECTOR (SE-2)

A. Refer to schedule on drawing from manufactures and model numbers.

**2.8** FIBERGLASS SUMP BASINS

A. Basin shall be constructed of 70-75% fiberglass and 25-30% polyester resin, ASTM D3753, with no fillers with minimum design safety of four. Basin shall have side hub inlet and vent flange.

B. Basin shall have heavy duty steel pump basin gasketed cover with inspection access plate. Access plate shall have discharge pipe flange for each pump and vent pipe, and hole for control cabling.

C. Basin shall have anti-floatation ring and be encased in minimum of 6” concrete.

D. Minimum wall thickness for basins as follows:

| Sump Diameter | 24” | 30” | 36” | 42” | 48” | 60” | 72” |
|---|---|---|---|---|---|---|---|
| Max10 ft Depth | 3/16” | 1/4” | 1/4” | 1/4” | 5/16” | 5/16” | 3/8” |
| Max 15 ft Depth | 1/4” | 5/16” | 5/16” | 5/16” | 3/8” | 3/8” | 7/16” |
| Max 20 ft Depth | 5/16” | 5/16” | 3/8” | 3/8” | 7/16” | 1/2” | 1/2” |

## PART 3 - EXECUTION

### 3.1 INSTALLATION - GENERAL

A. Install pipe and fittings in accordance with reference standards, manufacturer's recommendations and recognized industry practices.

B. Connect piping to fixtures, each piece of equipment, and drains. Install required piping as shown on drawings.

C. Grade horizontal lines with minimum of 1/8” per ft, except piping 2” diameter and smaller which shall be run at 1/4” per ft slope.

D. Grade horizontal lines with minimum of 1/4" per ft, except piping 4" diameter and larger which may be run at 1/8" per ft slope with approval of local authority.

E. Install piping parallel with building lines and at heights, which do not obstruct any portion of window, doorway, stairway, or passageway, except, as may be shown on plans. Install overhead piping as high as possible.

F. Grade vent pipe for complete drainage by gravity to soil or waste pipes. Vent terminations shall be set true and level. Locate vent piping at least 10 ft away from window, door or intake openings. Coordinate closely with roofing contractor to prevent damage to roofing membrane. Flashing shall be in accordance with requirements of roofing manufacturer.

G. Where interferences develop, offset or reroute piping as required to clear interferences. Coordinate locations of plumbing piping with piping, ductwork, conduit and equipment of other trades to allow sufficient clearances. Consult drawings for exact location of pipe spaces, ceiling heights, door and window openings, or other architectural details before installing piping.

H. Provide protective sleeve covering of elastomeric pipe insulation, where piping and/or fittings are embedded in masonry or concrete.

I. Maintain piping in clean condition internally during construction.

J. Mitered ells, notched tees, and orange peel reducers are not allowed. Bushings are not allowed on threaded piping.

K. Do not route piping through transformer vaults or above transformers, panelboards, or switchboards, including required service space for this equipment, unless piping is serving this equipment.

L. Set cleanouts true and level and protect properly throughout construction.

M. Set floor drains true and level and protect properly throughout construction. Weep holes shall be filled with removable material and kept free from concrete and other debris during construction. Weep holes shall be cleaned out for final working order. Provide safing for floor drains installed in elevated slabs.

N. Trap each fixture and piece of equipment requiring sanitary drainage connections. Trap seals shall be standard depth, except when deep seals are required by code. Traps shall be set true and level and located within limits of code requirements. Traps shall not be used as separator, interceptor or other type of device to retain solids. Traps shall be provided with thread type approved cleanout plugs when specified. Protect traps during construction and seal off to prevent stones, debris and other foreign matter from entering before use. Locate running traps for full accessibility with double cleanout.

O. Provide plugs or caps for pipe openings during construction to prevent debris from entering pipe. Temporary plug shall be plastic cap or equivalent.

## 3.2 COPPER TUBING

A. Copper tubing shall be installed per Copper Development Association guidelines in addition to methods specified herein.

B. Soldered Copper Joints:
   1. Use non-acidic and lead free flux on cleaned pipe and fittings for soldered joints.

2. Cut tube square, remove burrs from exterior of tube and ream interior of tube before assembly.
3. Fill joints with solder by capillary action. Solder shall cover joint periphery. Wipe joint clean.
4. Apply heat carefully to prevent damage to pipe, fittings and valves.
5. Follow manufacturer's recommendations when heating valves and equipment for soldered connections.

## 3.3 CONCRETE SUMP COATING

A. Abrasively clean surfaces to insure proper bonding.

B. Protect surfaces that are not to be coated (pipe opening, drains, etc.).

C. Apply primer coat or first coat as soon after surface preparation as physically possible. This first application must be done to steel surfaces before flash rusting can occur. If flash rusting occurs, do not continue with coating until flash rust has been removed.

D. Do not apply finishes to surfaces that are not dry.

E. Apply each coat to uniform finish.

F. Allow applied coat to dry before next coat is applied.

G. Re-coat within 24 h of previous coating. If more than 24 h passes between coats Manufacturer and/or Owner may direct Contractor to roughen last coat to insure proper bonding. If this happens cost of this roughening and cost of additional coating, plus labor associated with this work will be considered to be sole responsibility of Contractor.

H. Ensure wetted surfaces of hatch covers, sealing surface and openings are properly coated.

## 3.4 TESTING

A. Refer to Testing paragraph of Section 20 0000 - General Mechanical Requirements.

B. Water test may be applied to system either in its entirety or in sections. Piping shall be tightly plugged and submitted to 10 ft head of water located at highest point. Provide separate standpipe above highest point being tested or extend system to obtain required 10 ft head of water. Head shall be maintained for at least 30 minutes before inspection starts.

C. Defective work or material shall be replaced or repaired as necessary and inspection and test repeated. Repairs shall be made with new materials. No caulking of threaded joints or holes will be allowed.

D. Do not backfill pipe until successfully tested.

E. Testing with air will not be allowed.

**END OF SECTION**

# SECTION 23 0000 GENERAL HVAC REQUIREMENTS

## PART 1 - GENERAL

### 1.1 DESCRIPTION

A. Specification requirements defined in Division 20 of this Specification apply to, and are in addition to the work associated with equipment, systems, materials, and installation requirements specified in Division 23. Contractor shall provide the requirements specified in Division 20 to obtain complete systems, tested, adjusted, and ready for operation.

### 1.2 RELATED WORK

A. Section 20 0000 - General Mechanical Requirements

B. Section 20 0513 - Motors

C. Section 20 0529 - Mechanical Supporting Devices

D. Section 20 0553 - Mechanical Systems Identification

E. Section 20 0573 - Mechanical Systems Firestopping

F. Section 20 0700 - Mechanical Systems Insulation

## PART 2 - PRODUCTS

### 2.1 NOT APPLICABLE TO THIS SECTION.

## PART 3 - EXECUTION

### 3.1 NOT APPLICABLE TO THIS SECTION.

**END OF SECTION**

# SECTION 23 0550 VIBRATION ISOLATION

## PART 1 - GENERAL

### 1.1 RELATED WORK

A. Section 20 0529 - Mechanical Supporting Devices

### 1.2 REFERENCE

A. Work under this Section is subject to requirements of Contract Documents including General Conditions, Supplementary Conditions, and sections under Division 01 General Requirements.

### 1.3 DESIGN CRITERIA

A. Isolate all motor driven mechanical equipment, unless otherwise noted, from building structure, and from systems that they serve, to prevent equipment vibrations from being transmitted to structure. Unless specifically indicated, follow the latest edition of ASHRAE Application Handbook - Sound and Vibration Control, or manufacturer's recommendations for isolator selection whichever is more stringent.

B. Select and locate isolators to produce uniform loading and deflection. Use minimum of 4 isolators to support each piece of equipment.

C. Select vibration isolation devices based on the lowest operating speed of equipment.

D. Vibration Criteria:
   1. All rotating equipment shall operate at speeds less than 80% of their true critical speed. Unless otherwise required, equipment shall be balanced according to recommendations given in the following schedules.
   2. Vertical vibration of rotating equipment shall not be greater than levels indicated. Vibration shall be measured on equipment. If equipment has inertia base, allowable vibration level is reduced by ratio of equipment weight alone to equipment weight plus inertia base weight.

| Equipment Speed rpm | Maximum Allowable Vibration Displacement Peak-to-Peak (mil) |
|---|---|
| 100 to 200 | 10 |
| 200 to 300 | 6 |
| 300 to 600 | 4 |
| 600 to 1000 | 3 |
| 1000 or 2000 | 2 |
| over 2000 | 1 |

E. Following field installation, each fan and pump over 25 hp shall be balanced in accordance with the following maximum rms velocity levels:
   1. Fans: 0.15 inch/sec
   2. Pumps:

| | |
|---|---|
| 0.16 inch/sec | for 30 hp and smaller |
| 0.18 inch/sec | for 40 through 60 hp |
| 0.20 inch/sec | for 75 through 100 hp |
| 0.22 inch/sec | for 125 hp and larger |

Allowable field pump vibration values above are based on HI 9.6-2000, Figure 9.6.4.12.

F. Final in-field balance shall be measured with each fan over 25 hp installed on springs specified for unit. Fans shall be loaded with design static pressure. Measurement shall be carried out in vertical, horizontal and axis planes at impeller shaft bearing location.

### 1.4 SUBMITTALS

A. Submit Shop Drawings including, but not limited to, the following:
1. Manufacturer's name
2. Isolator type and model number
3. Materials of construction and finish
4. Dimensional data
5. Load ratings (lbs)
6. For piping operating above 120 deg F, include design load ratings for both hot and cold conditions.
7. Isolator free and operating heights
8. Static deflections
9. Isolation efficiency based on lowest operating speed
10. All other appropriate data

### 1.5 SUPERVISION, INSPECTION AND CERTIFICATION

A. Vibration isolation manufacturer or qualified representative shall provide supervision to assure correct installation and adjustment of isolators. Upon completion of installation and after system is put into operation, manufacturer or manufacturer's representative, shall make final inspection, adjustment, and submit report to Engineer in writing, certifying correctness of installation and compliance with Specifications.

## PART 2 - PRODUCTS

### 2.1 MATERIALS

A. Materials used shall retain their isolation characteristics for life of equipment served. Elastomeric materials shall comply with ASTM D2240 and shall be oil-resistant industrial grade neoprene.

B. Isolators shall be treated to resist corrosion.

C. Isolation devices subject to weather shall have either hot-dip or cold-dip galvanized, cadmium plated, or neoprene coated finish after fabrication and be furnished with limit stops to resist wind.

D. Vibration isolator springs shall have minimum additional travel to solid equal to 50% of rated deflection.

E. Ratio of lateral to vertical stiffness of vibration isolators shall not be less than 0.8 or greater than 2.0.

F. Coordinate selection of devices with isolator and equipment manufacturer.

## 2.2 MANUFACTURERS

A. Mason Industries, Amber/Booth Co., Aeroflex-VMC-Korfund. Vibration Eliminator, Vibro-Acoustics, or Kinetics equal to manufacturer's model listed, except flexible pipe connections.

B. Mason, Metraflex, Proco, Twin City Hose, Engineered Flexible Products (EFP) or Flex-Weld/Keflex for flexible pipe connections.

## 2.3 TYPE 1 MOUNTS (NEOPRENE PAD)

A. Mason Type Super W, neoprene waffle pads, 50 durometer. Select number and size of pads as required to accept equipment operating weight evenly.

## 2.4 TYPE 4 MOUNTS (RESTRAINED SPRING WITH NEOPRENE)

A. Mason Type SLR, combination spring and neoprene with rib molded base similar to Type 3 above, but shall have housing that includes vertical limit stops to prevent spring extension when weight is removed.

B. Installed and operating heights shall be the same. Maintain minimum clearance of 1/2" around restraining bolts and between housing and spring so as not to interfere with spring action. Limit stops shall be out of contact during normal operations. Use height saving brackets.

## 2.5 TYPE 5 HANGERS (SPRING HANGER WITH NEOPRENE)

A. Mason Type 30N, vibration hangers with steel spring and neoprene element in series. Neoprene element shall be molded with rod isolation bushing that passes through hanger box. Spring diameters and hanger box lower hole sizes shall be large enough to permit hanger rod to swing through 30° arc before contacting hole and short circuiting spring.

B. Mason Type DNHS may be used where load rating and specified deflection cannot be accommodated by Type 30N.

## 2.6 TYPE 6 HANGERS (PRECOMPRESSED SPRING HANGER WITH NEOPRENE)

A. Mason Type PC30N, vibration hangers similar to Type 5, but precompressed to rated deflection so as to keep piping or equipment at fixed elevation during installation. Design hangers with release mechanism to free spring after installation complete and hanger is subjected to its full load.

## 2.7 SPRING SUPPORTS FOR THERMAL EXPANSION

A. Carpenter and Paterson Series 900, variable spring supports. Supports shall be Type A or C when supported from above and Type F if supported from below.

B. Variable spring supports shall be designed to meet the requirements of:
   1. ASME Code for Pressure Piping – ASME B31.1
   2. MSS SP-58 and SP-69

C. Variable spring supports shall be provided with the following:
   1. Load Indicators
   2. Stainless steel nameplate and travel scale
   3. Turnbuckle or adjustable load column to allow for load adjustment
   4. Adjustable travel stop

5. Hot dipped galvanized finish

D. Contractor shall confirm spring can size as scheduled on the contract drawings is appropriate when compared to their computerized thermal expansion model results (refer to Section 20 0529 for computerized thermal expansion modeling requirements). If sizing differs, contact engineer.

## 2.8 TYPE AG PIPE ANCHORS/GUIDES

A. Mason Type ADA all-directional acoustical pipe anchors and Type VSG guides for vertical piping consisting of telescopic arrangement of 2 sizes of steel tubing separated by minimum 1/2" thickness of heavy duty neoprene and neoprene isolation material. Vertical restraints shall prevent vertical travel in either direction. Allowable loads on isolation materials shall not exceed 500 psi and design shall be balanced for equal resistance in any direction.

B. Submittals shall include supporting calculations by registered mechanical or civil engineer indicating anchor/guide loads and isolator selection.

## 2.9 FLEXIBLE PIPING CONNECTORS

A. Flexible connectors shall be suitable for pressure, temperature and fluid involved, but not less than 215 psig working pressure at 250°F for 14” and smaller and 150 psi working pressure at 250°F for 16” and larger.

B. Flexible connectors shall be straight pipe configuration and shall not be used to replace pipe fittings such as elbows.

C. Unless otherwise specified, minimum live length of flexible connector shall be as follows.

| Nominal Pipe Diameter (in) | Minimum Live Length (in) |
|---|---|
| 2-1/2” and smaller | 12” |
| 3” and 4” | 18” |
| 5” and larger | 24” |

D. Water System:
   1. Connection to Rotating Equipment:
      a. Connectors shall consist of Kevlar or Nylon tire cord fabric reinforced with EPDM cover and liner. Solid steel rings or steel wire shall be used within raised face rubber flanged ends to prevent pullout. Furnish connectors with control rods only where recommended by connector manufacturer.
      b. 2" and Smaller: Threaded connections, single sphere design similar to Mason SAFEFLEX SFU.
      c. 2-1/2" and Larger: Floating steel flange connections, two sphere design with ductile iron or plated carbon steel reinforcing rings, similar to Mason SAFEFLEX SFDEJ. Single sphere design similar to Mason SAFEFLEX SFEJ, may be used for 14" and larger.
   2. Connection to Non-rotating Equipment Mounted on Vibration Isolators:
      a. Seamless corrugated bronze or stainless steel flexible connector with braided cover for 2" and smaller with threaded or flanged connections; seamless corrugated stainless steel flexible connector with braided cover for 2-1/2" and larger with flanged connections.

## 2.10 PERFORMANCE

A. Select vibration isolation devices to achieve either minimum 95% isolation efficiency or minimum static deflection and mounting requirements listed below, whichever is greater. Minimum static deflections listed below are not nominal but certifiable minimums with actual installed load. Unless otherwise indicated, apply requirements listed for floor mount for roof-mounted equipment.

| Type of Equipment | Ground Supported Slab | | Floor Span | | | | | | | |
|---|---|---|---|---|---|---|---|---|---|---|
| | | | Up to20 ft | | 20 ft to 30 ft | | 30 ft to 40 ft | | 40 ft to 50 ft | |
| | Type | Min Defl. (in) | Type | Min Defl. (in) | Type | Min Defl. (in) | Type | Min Defl. (in) | Type | Min Defl. (in) |
| Refrigeration Machines: | | | | | | | | | | |
| Centrifugal, Scroll | 1 | 0.25 | 4 | 0.75 | 4 | 1.5 | 4 | 1.5 | 4 | 2.5 |
| Pumps: | | | | | | | | | | |
| 50 - 125 hp | Bolt to pad | | Bolt to pad | | Bolt to pad | | Bolt to pad | | Bolt to pad | |
| 150 hp and over | Bolt to pad | | Bolt to pad | | Bolt to pad | | Bolt to pad | | Bolt to pad | |

Piping Connected to Rotating or Recipro-Equipment: Use flexible piping connections, and Type 6 hangers for distance of 100 pipe diameters or 50 ft away from equipment, whichever is greater. Hangers shall have minimum deflection of 0.75" for pipe sizes 3" and smaller, 1.5" for pipe sizes 4" through 6" and 2.5" for pipe sizes 8" and larger. For piping less than 2" in diameter, neoprene or felt pad inserted between pipe or pipe covering and clamp or hanger may be used in lieu of Type 6 hangers.

Where piping is floor-supported, above requirements shall apply, but use Type 3 mounts instead of hangers.

Flexible piping connection shall not be used for unit heaters and in-line pumps that are supported by connected pipes. Type 6 hangers with 1" minimum deflection shall be applied within one foot of both sides of in-line pump and for distance of 100 pipe diameters or 50 ft away from first hanger at in-line pump, whichever is greater.

Vertical Pipe Risers: Use Type 6 hangers, Type AG anchors and guides as stated in Section 20 0529 - Mechanical Supporting Devices.

## PART 3 - EXECUTION

### 3.1 INSTALLATION

A. Install and adjust vibration isolation devices as specified, as shown on drawings and according to manufacturer's recommendations.
   1. Adjust isolators after piping system is at operating weight.
   2. Adjust limit stops on restrained spring isolators to mount equipment at normal operating height. After equipment installation is complete, adjust limit stops so they are out of contact during normal operation.
   3. Adjust active height of spring isolators.
   4. Adjust restraints to permit free movement of equipment within normal mode of operation.
   5. Adjust air-spring leveling mechanism.

B. In no case shall installation short circuit isolation devices.

### 3.2 FLEXIBLE PIPING CONNECTIONS

A. Provide flexible connections for piping connected to rotating or reciprocating equipment, equipment such as coils mounted on vibration isolators, and as indicated on plans and details.

B. Install flexible connections on equipment side of shut off valves and horizontal and parallel to equipment shafts where applicable.

C. For non-metallic flexible piping connections, 2-1/2" and larger, use flange type recommended by manufacturer. Flanges for mechanical grooved connections are not allowed.

**END OF SECTION**

**SECTION 23 0594 WATER SYSTEMS TEST ADJUST BALANCE**

## PART 1 - GENERAL

1.1 RELATED WORK

A. Section 23 0901A - Control Systems Integration

B. Section 23 0993 - Control Sequences

C. Section 23 2118 - Valves (balancing valves)

D. Section 23 2120 - Piping Specialties (flow measure devices)

1.2 REFERENCE

A. Work under this Section is subject to requirements of Contract Documents including General Conditions, Supplementary Conditions, and sections under Division 01 General Requirements.

1.3 DESCRIPTION

A. This Contractor shall be responsible for providing complete testing, adjusting and balancing (TAB) work for HVAC hydronic systems, such as chillers and pumps and other processes included in this project. The TAB contractor is to be independent of other related project contractors.

B. Work required shall consist of setting volume flow rates and adjusting speed controls, recording data, making tests, and preparing reports, as specified herein.

C. Scope of work includes TAB of new work specified herein and includes all equipment, distribution systems, and terminal units connected.

D. TAB work shall be performed by persons trained in TAB work and certified by Associated Air Balance Council (AABC) or National Environmental Balancing Bureau (NEBB). Procedures shall be in accordance with the latest edition of AABC, NEBB or TABB Standards, ASHRAE - 2011 HVAC Applications Chapter 38, and as detailed herein.

E. Mechanical Contractors who are members of AABC, NEBB or TABB and who have qualified personnel available to perform work may submit Quality Assurance Submittal for approval. Mechanical Contractors who cannot meet these requirements shall subcontract with independent TAB Contractor who meets these requirements. TAB subcontractor shall prepare Quality Assurance Submittal for Contractor who will submit it for approval.

F. Upon direction of Architect/Engineer or TAB subcontractor, Mechanical Contractor shall provide at no additional cost to Owner, any additional work and/or devices necessary to properly balance system, including calibrated balancing valves, gauge tappings, flow sensors, and thermometer wells. Mechanical Contractor shall be responsible for trimming and balancing pump impellers as necessary to obtain design pump flow rates at the minimum pressure differential.

G. TAB work shall not proceed until all assigned personnel have been approved by Architect/Engineer via Quality Assurance Submittal. Coordinate each phase of TAB work with overall project schedule. Each phase of TAB work shall be done in timely manner as detailed herein. Fieldwork must be completed before occupancy. Certificate of Substantial Completion shall not be issued until after Final Report is accepted by Architect/Engineer. The tab report is to be signed and stamped by a registered professional engineer.

H. The TAB field work is to be conducted in both the heating and cooling mode of operation. This may require the tab contractor to return to the site after the seasonal change over.

I. The materials, equipment and representative system tests should be witnessed by the University and the engineer. The names of the witnesses are to be listed on the test results.

J. Testing and balancing shall be performed only after all equipment and controls have been installed and all systems are 100 percent functional.

1.4 SUBMITTALS

A. General:
   1. Make submittals in accordance with project submittal procedure. Submit minimum of 5 copies of submittals unless otherwise directed (3 for O&M Manuals, 1 for A/E, 1 for Contractor).
   2. Reports shall be assembled using 3-ring hard cover binder with project name and location on cover and side panel. Information sheets shall be 8-1/2" x 11" white bond paper. Use pre-printed forms of NEBB, AABC or TABB wherever possible. Provide sortable electronic version as well as hard copy. Provide numbered tabs for each system. Assemble report in the following order:
      a. Transmittal letter
      b. Cover sheet with project title, location, submittal date, and name and addresses of Owner, Mechanical Contractor, TAB subcontractor, Architect, and Engineer
      c. Index of numbered tabs listing major systems
      d. Data organized by system in the following order:
         1). Equipment data and measurement summary
         2). Equipment measurement data
         3). Branch main measurement data
         4). Terminal device measurement data arranged by room or zone

B. Quality Assurance Submittal:
   1. Within 30 days of signing contract, Contractor shall submit the following information:
      a. Firm resume
         1). AABC, NEBB or TABB active membership certificate
         2). Names of 3 recent relevant completed projects along with project address, Owner's contact person, supervising design professional
      b. Supervisor resume
      c. Balance technicians resumes
   2. Architect/Engineer and/or Owner reserves the right to contact previous project representatives and to reject persons whom Architect/Engineer and/or Owner feel are not qualified for this project due to lack of relevant experience or problems on previous projects.

C. Planning Report:
   1. Submit Planning Report as detailed in Part 3 of this Section to demonstrate to Architect/Engineer and Owner that proper procedures are being followed. Submit Planning Report after Quality Assurance submittal and 30 days before any fieldwork starts.

D. Initial Test Report:
   1. Prior to starting Final Balance Phase, submit Initial Test Report as detailed in Part 3 of this Section to indicate to Architect/Engineer and Contractor incomplete work or problem areas to be resolved before final balance is completed.

E. Final Report:
1. Within 30 days after fieldwork is completed, submit Final Report as detailed in Part 3 of this Section to assure design objectives are met and to assist Owner in future maintenance.

1.5 REFERENCE STANDARDS

A. Refer to the latest publications of NEBB, AABC, TABB and ASHRAE publications for establishing required procedures.

## PART 2 - PRODUCTS

2.1 INSTRUMENTATION

A. Provide required instrumentation to obtain proper measurements. Application of instruments and accuracy of instruments and measurements shall be in accordance with requirements of NEBB or AABC or TABB Standards and instrument manufacturer's specifications.

B. Instruments used for measurements shall be accurate, and calibration histories for each instrument shall be available for examination by Architect/Engineer upon request. Calibration and maintenance of all instruments to be in accordance with requirements of NEBB, AABC or TABB Standards.

## PART 3 - EXECUTION

3.1 GENERAL

A. TAB work shall be done in separate phases as outlined herein. TAB schedule shall allow ample time to complete TAB work before occupancy. Follow procedures outlined herein and as described in Planning Phase narratives.

B. Unless otherwise specified, maximum acceptable offset tolerance shall be ± 10% of design flow rates indicated on drawings and schedules.

3.2 PLANNING PHASE

A. Procedure:
1. Obtain the latest Contract Documents including addenda, construction bulletins and change orders. Obtain shop drawings and performance curves from Mechanical Contractor for pumps, flow measuring devices, and terminal devices. Prepare Planning Report as detailed herein. Make adjustments in Planning Report and/or measuring instrument calibration.

B. Planning Report:
1. Planning Report shall contain the following minimum requirements.
2. Narratives: Furnish written narratives of procedures to be used. Include separate narratives for each pump and liquid fluid handling system. Identify flow-measuring devices to be used at each pump and terminal device. Include different narratives for constant and variable flow systems. For non-standard water systems, include narratives on how to measure and adjust for different viscosities. Narratives shall include references to published standards of NEBB or AABC. Narratives shall include measuring instruments to be used and ranges required for each procedure. Narratives shall include specified adjustment tolerances.
3. Prebalance Checklist shall include, but not be limited to:
a. Check for completeness of work
b. System cleaning

c. System fill and air venting
d. Place system into operation
e. Check expansion tanks and fill pressures
f. Pump bearings, alignment, starters, vibration isolators, rotation
g. Setting valves to proper position including shut-off and bypass valves
h. Set up of controls and control devices

4. Measuring Instrument List: List of measuring instruments will be used for each procedure. Indicate ranges required for each procedure. Provide data on each measuring instrument to be used. This data shall include:
   a. Manufacturer name and model number
   b. Measurement range
   c. Pressure/temperature limits
   d. Date put into service
   e. Date of last calibration
   f. Certificate from calibration firm
5. Architect/Engineer reserves the right to request adjustments in any procedure and/or ask for recalibration of any measuring instrument that has not been recalibrated within past year.
6. Samples: Submit copies of TAB forms to be used.
7. Branch circuit and terminal measurements and adjustments: Indicate on pre-printed forms all measurements to be taken and adjustments to be made in field. Include branch circuit or terminal identification, system, space served, location, design flow rates (including zone and system summaries), and flow measuring device size, type, Cv, and manufacturer. Indicate the initial set points on forms.

## 3.3 SET-UP PHASE

A. Procedure:
   1. Perform prebalance checkout as per Planning Phase narrative.

B. Initial Test:
   1. Measure pump data and flow rates in "as found" condition after initial valve settings are made.

C. Initial Test Report:
   1. Submit report to Architect/Engineer and Mechanical Contractor indicating measurements made and including notes of items that are not complete or are not within design tolerance.

## 3.4 INSPECTION

A. The tab contractor will conduct an inspection of the mechanical installation at 30% and 70% completion. A report on the installation will be given to the prime contractor listing items to be corrected and addressed prior to the tab contractor beginning tab work.

## 3.5 FINAL BALANCE PHASE

A. Procedure:
   1. Perform procedures as per Planning Phase narrative. Correct deficiencies and redo procedures as required prior to submitting Final Report.

B. Final Report:

1. Submit report to Architect/Engineer and to Mechanical Contractor indicating all data, measurements and adjustments as per requirements herein and per Planning Phase narrative. Do not submit partial or incomplete reports.

C. Final Report Adjustments:

1. Architect/Engineer reserves the right to check any measurement or adjustment made and to reject any portion of work not within specified tolerance. All corrections of problems discovered by the TAB shall be corrected immediately by the responsible contractor and the system retested for compliance with contract documents. Contractor shall resubmit all or portions of Final Report as directed by Architect/Engineer.

**END OF SECTION**

# SECTION 23 0598 ACCEPTANCE TESTING OF ROTATING EQUIPMENT

## PART 1 - GENERAL

### 1.1 RELATED WORK

A. Section 23 2123 - Pumps

### 1.2 REFERENCE

A. Work under this Section is subject to requirements of Contract Documents including General Conditions, Supplementary Conditions, and sections under Division 01 General Requirements.

### 1.3 SCOPE

A. The scope of this section is to set minimum standards for acceptance testing of rotating equipment. This testing involves checking machine alignment and vibration characteristics.

B. Equipment covered by this Section includes the following:
   1. Chilled water and condenser water pump-motor assemblies 5 hp and larger.

### 1.4 QUALIFICATIONS

A. Acceptance Testing Contractor (ATC) shall be independent of Mechanical Contractor.

B. Described testing procedures shall be performed by well established company with at least 5 yrs of machinery installation, alignment and vibration testing experience. Technicians used by ATC shall have at least 3 yrs experience in installation, alignment and vibration measurement of rotating equipment.

C. ATC shall submit list of personnel who will be utilized during acceptance testing, and their qualifications. Certificates or diplomas of completion of any manufacturer's vibration analysis training are required.

D. ATC's personnel shall have ability to identify and pinpoint mechanical problems found during acceptance testing and recommend appropriate corrective measure, including dynamic balancing, in-depth vibration analysis and bearing checks.

### 1.5 VIBRATION ANALYZER TESTING EQUIPMENT REQUIREMENTS

A. ATC shall utilize instrument that is microprocessor based FFT analyzer and has swept filter, and which is designed for measuring vibration on rotating equipment. Test equipment shall have the following on-site capabilities:
   1. To collect and display overall vibration values from each bearing point on machines.
   2. To collect and display FFT data from each bearing point on machines.
   3. To store vibration readings within analyzer for download to suitable software program for reporting and documenting purposes.
   4. To measure phase with either photo-tach and/or strobe light, on site.
   5. To measure start-up or coast-down vibration data, as well as to display and print collected data on-site.
   6. To provide hard copy printout of measurements, including overall vibration measurement, FFT measurements, phase readings and start-up and coast-down data, on site from on-board printer.

### 1.6 ACCEPTANCE TESTING REPORT REQUIREMENTS

A. Documenting report shall contain the following sections:
   1. Summary of installation, alignment and vibration results fully documenting all aspects of installation and acceptance testing procedures.
   2. Alignment tolerances achieved on each piece of equipment including final alignment readings, shim placements and soft foot condition of any aligned unit.
   3. Documenting report of vibration readings including overall values and FFTs collected from each bearing point and measured in horizontal, vertical and axial direction. Preferred method of documentation is by utilizing appropriate software program for printout and display of collected vibration values.
   4. Final condition of each mechanical unit including indications of mechanical trouble and recommendations for corrective action.
   5. Other items as required.

## PART 2 - PRODUCTS

### 2.1 NOT APPLICABLE TO THIS SECTION

## PART 3 - EXECUTION

### 3.1 MACHINERY ALIGNMENT EXECUTION AND ACCEPTANCE STANDARDS

A. The following guidelines shall be used for establishing alignment procedures and tolerances for direct coupled machinery, regardless of speed.

B. Rough alignment shall be used to bring machines into measurable range.

C. Side-to-side alignment of direct coupled machinery shall be brought into tolerance first.

D. Top-to-bottom alignment of direct coupled machinery shall be brought into tolerance next.

E. Soft foot condition of each machine shall be checked and verified in documenting report. Machines found to exhibit soft foot condition shall be identified and documented in report along with corresponding shim amount used for correction.

F. Final corrected alignment readings for direct coupled machines shall be as follows:
   1. Angular alignment within .002".
   2. Radial alignment within .002".

### 3.2 MACHINERY VIBRATION EXECUTION AND ACCEPTANCE STANDARDS

A. The following guidelines shall be used to determine whether or not machine's operation is acceptable based on measured vibration levels and characteristics.

B. Each machine train shall have vibration readings obtained from each bearing point in horizontal, vertical and axial direction.

C. Data collected and displayed shall be clearly identified as to machine ID, bearing number and direction in which measured. This data shall be displayed in Velocity, Peak (in/sec. pk.) Frequency data reported shall be displayed in cpm (cycles per minute). Measured frequency ranges shall be large enough so as to fully measure bearing, gear and harmonics of above, but not so large so as to make displayed data unreadable on low end of frequency range.

D. Each machine measured and in each measurement direction shall not exceed the following vibration levels:

1. Pumps ..... ..... 0.200 in/sec peak

E. No machine, which exceeds overall vibration values listed will be accepted for operation.

F. No singular vibration peak, within measured frequency range, shall exceed 75% of overall value measured or machine will not be accepted for operation.

G. Machines, which do not meet vibration acceptance levels, shall, in documenting report, contain sufficient data and comments to identify the cause of vibration as well as suggest corrective action to reduce vibration levels to acceptance criteria.

H. Procedures used to reduce vibration levels of each machine to acceptance level shall be documented in accompanying report, including balancing results, additional alignment, phase analysis results, machine inspection procedures, and additional vibration analysis test results.

## 3.3 OWNER'S OBSERVER

A. Representative of utilities department wishes to be present during acceptance testing. Notify Engineer one week in advance of testing. Failure to provide this notification may result in non-acceptance of testing report.

**END OF SECTION**

**SECTION 23 0901A CONTROL SYSTEMS**

## PART 1 - GENERAL

1.1 RELATED WORK

A. Section 20 0513 - Motors

B. Section 23 0550 - Vibration Isolation

C. Section 23 0993 - Control Sequences

D. Section 23 2118 - Valves

E. Section 26 0519 - Low-Voltage Electrical Power Conductors and Cables

F. Section 26 0533 - Raceway and Boxes for Electrical Systems

1.2 REFERENCE

A. Work under this Section is subject to requirements of Contract Documents including General Conditions, Supplementary Conditions, and sections under Division 01 General Requirements.

B. ASHRAE FUN IP - (20013) Fundamentals Handbook, I-P Edition

C. ASHRAE 135 - (2012) BACnet - A Data Communication Protocol for Building Automation and Control Networks (ANSI Approved) .13

D. BUILDING SYSTEMS COMMISSIONING

1. "An independent third party Commissioning Agent will document completion of the Mechanical, Fire Suppression, Plumbing, HVAC, Electrical, Communications and Electronic Safety and Security Systems for the project. The Construction Manager, Division Contractors, and Control Contractor are members of the Commissioning Team and will facilitate completion of the Commissioning process. Refer to section 019113 "Building Systems Commissioning" for the project Commissioning requirements and roles and responsibilities of each member of the Commissioning Team."

1.3 DEFINITIONS

A. The following abbreviations, acronyms, and definitions are used in addition to those details found elsewhere in contract documents.

| | | |
|---|---|---|
| 1. | Actuator: | Control device to provide motion of valve or damper in response to control signal |
| 2. | AI: | Analog Input |
| 3. | AO: | Analog Output |
| 4. | Analog: | Continuously variable state over stated range of values |
| 5. | Auto-Tune: | Software routine used to adjust tuning parameters based on historical data |
| 6. | BAS: | Building Automation System |
| 7. | BMS | Building Management System |
| 8. | DDC: | Direct Digital Control |
| 9. | DDCP: | Direct Digital Control Panel |
| 10. | Discrete: | Binary or digital state |

11. DI: Discrete Input (Sometimes referred to as Binary Input BI)
12. DO: Discrete Output (Sometimes referred to as Binary Output BO)
13. EMCS: Energy Management and Control System (Typically interchangeable with BAS or BMS)
14. E/P: Voltage to pneumatic transducer (Often a solenoid valve is referred to as an E/P transducer)
15. FA Field Adjustable
16. FC: Fail Closed position of control device or actuator. Device moves to closed position on loss of control signal or energy source
17. FMS: Facility Management System linking two or more BAS
18. FO: Fail Open position of control device or actuator. Device moves to open position on loss of control signal or energy source
19. I/P: Current to pneumatic transducer
20. Instrument: Device used for sensing input parameters or used for actuation
21. Modulating: Movement of a control device through an entire range of values proportional to an infinitely variable input value
22. Motorized: Control device with actuator
23. NC: Normally Closed position of switch after control signal is removed
24. NO: Normally Open position of switch after control signal is removed
25. Node: DDCP, operator workstation, or other control device connected to communication's network
26. Operator: Same as actuator for motorized devices. Also refers to an individual who physically “operates” the facility
27. PC: Personal Computer
28. Peer-to-Peer: Mode of communication between controllers in which each device connected to network has equal status and each shares its database values with all other devices connected to network.
29. P: Proportional control, control mode with continuous linear relationship between observed input signal and final controlled output element.
30. PI: Proportional - Integral control, control mode with continuous proportional output plus additional change in output based on both amount and duration of change in controlled variable (Reset control).
31. PID: Proportional - Integral - Derivative control, control mode with continuous correction of final controlled output element versus input signal based on proportional error, its time history (reset), and rate at which its changing (derivative).
32. Point: Analog or discrete instrument with addressable database value
33. Self-Tune: Same as Auto-Tune
34. Solenoid: Electric two position actuator (See E/P)
35. TCC: Temperature Control Contractor (Same as Control Contractor).
36. TCP: Temperature Control Panel

## 1.4 ACCEPTABLE CONTROL CONTRACTORS

A. Control Contractor shall have full service office within 100 miles of Project site. Full service office is defined as having complete parts inventory, having all required test and diagnostic equipment, and to be home office of Applications Engineers, Supervisors, and Field Technicians. Control

Contractors shall be factory authorized agent or dealer of controllers and control hardware as manufactured by:

1. Johnson Controls, Inc
2. Honeywell, Inc
3. Alerton Technologies
4. Distech

B. The systems integration contractor must have on staff the following number of key personnel as a minimum each with a minimum of 5 years of related controls installation experience:
   1. Project Manager – 2 years
   2. Controls applications Engineer – 2 years
   3. Programmer – 2 years
   4. Installation Supervisor – 2 years
   5. Controls Technician – 5 years

C. Prefer contractor staff to include Niagara Tridium AX or N4 certified technicians, and one advanced certified.

D. Have experience with successful integrations of controls with Niagara Tridium systems.

E. Contractor to have a minimum of 3 years of installation history with the brand of controls being bid.

F. Must have help desk operation or staff available for phone contact 24/7 for providing technical support to university staff. Call forward and emergency service numbers are not acceptable during normal business hours.

G. Bids will be accepted only from prequalified Control Contractor per "Instruction to Bidders".

1.5 SYSTEMS DESCRIPTION

A. Control system shall be Direct Digital Control (DDC).

B. Damper and valve actuators shall be electric type, unless otherwise noted.

C. Provide supplementary BAS architecture, that is based on and consistent with the UK standard architecture, consisting of communication network, modular designed DDCPs with all points addressable and modifiable from existing BAS user workstations or from master DDCP using laptop computer. BAS shall communicate via BACnet/MSTP or BACnet/IP communications protocol between the room level controllers and the building level controllers and BACnet/IP communications protocol between the building level controllers and the existing BAS server. All system components shall be fully BACnet compliant without the use of integration gateways. BAS shall be fully expandable with addition of BACnet based hardware and/or software. Expansion shall not require removal of existing DDCPs, sensors, actuators, or communication networks.

D. System must be able to communicate with Tridium Niagara Framework at the University Medical Center via Protocol Address assigned by the University at the building location. Provide PICS for Windows-based control software and every controller in system, including unitary controllers. PICS and BIBBS shall comply with Tridium PICS and BIBBS.

E. Ethernet network cabling shall be installed by Division 27 contractor with cable runs from central EIDF/IDF communication closet to multiple central locations on each floor. Ethernet cabling shall be utilized for BAS BACnet/IP communication from each zone to the existing BAS operator workstation. Controls contractor shall provide BACnet/IP to BACnet/MSTP small capacity Building

Level Controller in each zone. BACnet/MSTP communication network shall be provided and installed by controls contractor between each room level controller in zones to BACnet/IP to BACnet/MSTP Building Level Controller. BACnet/MSTP communication network node capacity for each small capacity Building Level Controller zone shall be limited to a maximum of 80% manufacturer's recommended DDC controller capacity or 25 devices per trunk total, whichever total number of nodes is smaller

F. System intelligence shall be such that operator workstation(s) can be used for programming controls, performing analysis on filed data, generating maintenance and operation reports and providing permanent storage for programs and data.

G. System shall be web-based, telnet or HyperTerminal capable. No graphics shall be provided. All graphics will be owner provided to existing Tridium system.

H. All building automation products utilizing BACnet shall communicate using the protocols and network standards as defined by ANSI/ASHRAE Standard 135-2001, BACnet and be tested by BACnet Testing Laboratories (BTL) and have passed the necessary requirements for BACnet compliance and interoperability.

I. New BAS shall seamlessly integrate with existing site Tridium web server. Existing web server shall be able to access and read all input, output and calculated points and issue commands to all output points in new BAS by means of a standard web browser. Contractor shall provide necessary hardware and software components to accomplish this interface.

J. Provide modular designed stand-alone controllers capable of future BAS architecture with peer-to-peer and/or low/medium speed communication networks. Upgrade to full BAS architecture shall not require removal of existing controllers, sensors, actuators, etc.

K. BAS network architecture shall be based on an Open implementation of BACnet using ASHRAE 135-2012, exclusively as the communications protocol for communication between DDC Hardware devices, including BAS Web Server, to allow multi-vendor interoperability.

L. Contractor provided BAS Ethernet Network shall be physically separate from other building Ethernet networks

M. Provide BAS architecture consisting of communication network, operator workstations, web servers and modular designed controllers with all points addressable and modifiable from operator workstations or from master controller using laptop computer. BAS shall be fully expandable with addition of hardware and/or software. Expansion shall not require removal of existing controllers, sensors, actuators, or communication networks.

N. System shall support operator workstations as specified and shall be capable of additional workstations, limited only by systems maximum node capacity.

O. Operator workstations connected to building Ethernet network shall be able to access BAS information as determined by Graphical User Interface (GUI) software through standard web browsing software (Internet Explorer, Mozilla Firefox, Opera, or Google Chrome). GUI software shall allow transparent access to each building component/system for control and/or monitoring.

P. System intelligence shall be such that operator workstation(s) can be used for programming controls, performing analysis on filed data, generating maintenance and operation reports and providing permanent storage for programs and data.

Q. Workstation PCs and printer will be furnished by Owner. Provide hardware interface card to communicate with BAS network and all required software for each workstation, as defined in this Section, to make each PC full function workstation.

R. All safety devices shall function in both auto and hand modes on starter.

S. All safety devices shall function in both VFD and bypass starter modes.
   1. Dampers interlocked with fans shall operate in both VFD and bypass starter modes to prevent dead-head of fans.
   2. Valves interlocked with pumps shall operate in both VFD and bypass modes of operation to prevent dead-head of pump.
   3. All safeties shall be hardwired through VFD/bypass starter safety circuit to prevent unsafe operation when in either VFD or bypass modes.

1.6 SCOPE OF WORK

A. Provide all labor and materials for complete and fully functioning control systems in accordance with Contract Documents including this Section.

B. Engineering services shall be performed by factory trained engineers that are employed by the control manufacturer. System shall be installed either by trained mechanics directly employed by Control Contractor or by subcontractors who are under direct supervision of Control Contractor's representative. Owner reserves the right to exclude any project managers, engineers, field supervisors, or technicians whose past experience are not sufficient to meet needs of project. The manufacturer shall be responsible for the engineering, installation, startup, checkout, commissioning and warranty of control systems.

C. Engineering services shall be performed by Factory Trained Engineers. System shall be installed either by trained mechanics directly employed by Control Contractor or by subcontractors who are under direct supervision of Control Contractor's representative. Engineer reserves right to exclude Project Managers, Engineers, Field Supervisors, or Technicians whose past experience is not sufficient to meet needs of Project.

D. Control Contractor’s Project Managers, Engineers and Digital System Programmers shall have previously performed in capacity that qualifies them to successfully engineer system of scope and magnitude similar to this Project.

E. Labor shall include, but not be limited to:
   1. Engineering services to size unscheduled valves and dampers based on design criteria, and confirm sizing of scheduled valves and dampers.
   2. Engineering services to produce requested submittals and working construction drawings and record drawings as specified here within.
   3. Engineering services for BAS Ethernet network design.
   4. Project management services as single point contact to coordinate construction related activities.
   5. Field mechanics for installation of control wiring and related control devices.
   6. Field technicians to startup, calibrate, adjust, and tune control loops.
   7. Field technicians to perform system checkout and testing, and to complete required reports.
   8. Field supervisor during controls installation and startup.
   9. Field technicians to assist Mechanical Contractor and Testing and Balancing (TAB) Contractor in adjusting controls and determining setpoints related to TAB work.
   10. Field representatives and/or classroom instructors to provide Owner training as specified.

F. Control Contractor shall be responsible for complete installation of control devices (except as noted), wiring terminations at controller locations to accomplish control sequences specified in project manual or on drawings. Control Contractor is required to provide power for air terminal

controllers and other field mounted devices that require 24 VAC, 60 Hertz and shall be powered from 120 to 24 VAC transformer panels provided by Control Contractor. Control Contractor shall also be responsible for additional instrumentation described in point schedules found in Contract Documents, which may not be directly related to specified control sequences.

1. Control contractor shall provide unique tag numbers for all devices under this specification and reference those tag numbers in control sequences and control diagrams.
2. If Owner has tagging convention, Control contractor shall utilize it. If no tagging convention exists, Control contractor shall provide one for all devices under this specification.

G. Mechanical Contractor shall furnish and install all wells, taps, and other mechanical interfaces required for control equipment mounting into piping systems. Mechanical Contractor shall install all in-line mounted devices, such as valves, dampers, flow meters, static pressure probes, etc., furnished by Control Contractor. Control Contractor is responsible for installation of all other control devices, such as actuators, linkages, sensors, air terminal controllers, flow transducers, remote mounted control devices, control panels, control transformers, etc.

H. Coordinate requirements above with Mechanical Engineer and Section 23 3600 – Air Terminal Devices, for required control devices. Define what is to be provided to the Air Terminal manufacturer for mounting at the factory, what the Mechanical Contractor is to install in the field and what the Control Contractor is to install in the field.

I. All electrical work required, as integral part of work is responsibility of Control Contractor. Provide final control power connections including conduit, wire, and/or disconnect switches to all control devices from appropriate electrical distribution panels.

1. Electrical Contractor will provide circuit breakers, junction boxes, and wiring required to provide electrical power to DDCP's panels.
2. 120 to 24 VAC transformer panels shall be mounted adjacent to DDCP panels and powered from dedicated electrical circuit.
3. Should any change in number of DDCPs or addition of other electrical equipment after contracts are awarded, Control Contractor shall immediately notify Electrical Contractor of change. Additional costs due to these changes shall be responsibility of this Contractor.

J. Materials shall be as specified unless approved through procedures for product substitution specified in Division 01. Control Contractor shall provide components not specifically indicated or specified, but necessary to make system function within the intent of specification.

K. All electrical products to be listed and labeled by UL and comply with NEMA Standards.

L. Provide weather protection cover or weatherproof control devices where required for control devices located outdoors.

M. Control Contractor is responsible for integration of the following independent systems into the Control System.

1. Variable Frequency Drives (VFD):
    a. VFD provider will provide a termination point for a single point communication connection to the BAS utilizing BACnet MS/TP protocol. Contractor shall provide cabling and conduit to make an interface connection from the BAS to the VFD. Contractor and VFD provider responsible for translation of network protocols, testing of communications between systems, and joint commissioning of systems. Contractor to refer to P&ID's, DDC Point Schedules, and Section 20 0514 Variable Frequency Drive (VFD) System for programming and monitoring requirements.

## 1.7 SUBMITTALS

A. Shop Drawings:

1. Refer to Division 01 General Requirements.
2. Submit manufacturer's printed product data sheets for control devices and materials listed in bill of material in Control Contractor's control drawings. An index listing of all control devices and equipment applicable to project to be listed in the following format:
    a. Room #
    b. Device Part #
    c. Device Description
    d. Sheet # where cut sheet is located
3. Datasheets shall be submitted electronically in pdf format with bookmarks provided for each individual device and table of contents listing each device manufacturer and full model number with links to device pages. Organize sheets in order of model number, alphabetically, then numerically. If more than 20 product data sheets are submitted, provide front index and tabs for logical groups of devices. When a manufacturer's data sheet refers to a series of devices rather than a specific model, the data specifically applicable to the project shall be highlighted or clearly indicated by other means. Data sheets shall include sufficient technical data to describe instrument parameters required as specified. Refer to Specification section 20-0000 General Mechanical Requirements for additional submittal requirements and formatting.
4. BAS manuals to be in two parts: 1) Operation and maintenance, and 2) System application manuals.
5. One (6) hard copy and (1) electronic copy of BAS manuals shall be provided to Physical Plant by BAS contractor at date of submittal completion.
6. Submit data concerning type of signal wiring and installation methods including raceway types and grounding methods.
    a. Submit voltage drop calculations for all low voltage DDC circuits. Voltage drop to include number of devices and wiring run lengths, calculated voltage available at each device.
7. Submit control drawings including, but not limited to, the following:
    a. Front sheet index for projects with more than 10 control drawing sheets.
    b. Overall system/network architecture drawings: Provide block diagram showing relationship of each controller, control panel, or other network devices relative to each other, label room location of each device, number and indicate model number of each device, indicate network types, and general cabling routing.
    c. Control Drawings: Provide graphic representation of systems with all major inline components to properly locate all control devices. Identify controlled devices with their software designation on drawings, including unique valve and damper tag numbers.
    d. Detailed wiring and piping diagrams show point-to-point hookup details of all transducers, relays, outputs, inputs and subsystem components. Label all pneumatic lines and control wires with field ID numbers/colors.
    e. Bill of Materials: Identify actual product model number used for each control device for each schematic control drawing.
        1). Bill of material shall be included on flow diagrams for each system and on panel layouts showing panel components.
    f. Sequence of operation: Provide written narrative describing each control sequence indicating method of control. Identify sensors, controllers, and actuators used with references to tag number of the controlled device. Include setpoints and offsets of each control loop.

8. Instrumentation submittals can be submitted as a separate submittal from control shop drawings but must be submitted at the same time as control shop drawings.
9. Layout Design Drawing for each control panel:
    a. The layout drawing shall be to scale with all devices shown in their proposed positions.
    b. All control devices shall be identified by name.
    c. All terminal strips and wire channels shall be shown.
    d. All control transformers shall be shown.
    e. All 120 VAC receptacles shall be shown.
    f. All IP connection points shall be shown.
10. Wiring/Pneumatic Design Diagram for each control panel.
    a. The control voltage wiring diagram shall clearly designate devices powered by each control transformer. If the control devices use half wave power, the diagram shall clearly show the consistent grounding of the appropriate power connection. All wire identification numbers shall be annotated on the diagram.
    b. The Field Bus wiring diagram shall clearly show the use of the daisy chain wiring concept, the order in which the devices are connected to the Field Bus, and the location of end of segment termination devices. All wire identification numbers shall be annotated on the diagram.
    c. If shielded communication wiring is used, the grounding of the shield shall be shown.
    d. The terminal strip wiring diagram shall identify all connections on both sides of the terminal strip. Wiring label numbers for all wiring leaving the control panel shall be annotated on the diagram.
    e. Detailed piping diagrams showing point-to-point hookup details of transducers, relays, outputs, inputs and subsystem components. Label pneumatic lines with field ID numbers/colors.
11. Wiring Design Diagram for individual components (controllers, protocol translators, etc.): The wiring diagram for each component shall identify all I/O, power, and communication wiring and the locations on the terminal blocks to which the wires are landed. Example: Fan Status sensor is wired from terminals 5/6 on the controller to terminals 17 and 18 on the terminal strip.
12. Installation Design Detail for each I/O device.
    a. A drawing of the wiring details for each sensor and/or end device.
    b. For devices with multiple quantities, a standard detail may be submitted.
13. A System Flow Design Diagram for each controlled system.
    a. A two dimensional cross sectional diagram showing key components such as fans, coils, dampers, valves, pump, etc.
    b. Identify the locations and names of all sensors and end devices that are associated with the control system. Label the panel name and terminal numbers where the connections are landed.
    c. A legend shall be provided for all symbols used.
14. BACnet Compliance Documentation:
    a. The Protocol Implementation Conformance Statement (PICS) for each component.
15. Direct Digital Control System Hardware Technical Data.
    a. A complete bill of materials of equipment to be used indicating quantity, manufacturer, and model number.
    b. Manufacturer’s description and technical data for each unique device to include performance curves, product specification sheets, and installation instructions. When a manufacturer’s data sheet refers to a series of devices rather than a specific model, the

data specifically applicable to the project shall be highlighted or clearly indicated by other means.

c. This requirement applies to:
   1). Controllers
   2). Transducers/Transmitters
   3). Sensors
   4). Actuators
   5). Valves
   6). Relays and Switches
   7). Control Panels
   8). Power Supplies
   9). Batteries

16. An Instrumentation List for each controlled system.
    a. The list shall be in a table format.
    b. Include name, type of device, manufacturer, model number, and product data sheet number.
17. Sequence of Control: A sequence of control for each system being controlled. Include the following as a minimum.
    a. Process control sequence for each end device.
    b. Supervisory logic sequence of control for each system.
    c. The impact of each global application program on the sequence of control (Example: Demand Control).
    d. A list of all physical inputs and outputs associated with each sequence.
    e. Within the sequence of control, all application parameters that are to be user adjustable from an Operator Workstation shall be annotated with (FA) after the name of the parameter. This shall include set points, reset schedule parameters, calibration offsets, timer settings, control loop parameters such as gain, integral time constant, sample rates, differentials, etc.
    f. Within the sequence of control, all calculated values that are to be viewable at the Operator Workstation shall be annotated with (rpt) after the name.
    g. All points that shall be subject to manual control from an operator workstation.
    h. A list of all alarm points, a description of the alarm and a description of the alarm criteria.
    i. A list of all variables for which historical trending will be applied, the sample rates and any criteria used to start and stop the historical trending.
18. Binding Map
    a. A list of the device to device data flow. This shall not include the flow of data from devices to the presentation system.
    b. Include:
       1). Description of the variable.
       2). Sending device.
       3). Receiving device.
19. Submit valve schedules with shop drawings that indicate unique tag numbers for each device, equipment or system served, device model numbers, sizes, shutoff head required, actuator air pressure or force required to meet shutoff head, torque requirements for rotary valves, flow coefficients (Cv) for 10% and 100% valve stem travel, actual flow requirements based on

equipment shop drawings, calculation of actual pressure drops, actuator model number, actuator torque capacities and pilot positioner locations.

20. Valve and damper shop drawing submittals will not be processed unless all supporting data and sizing calculations are included.
21. Submit damper schedules with shop drawings that indicate unique tag numbers for each device, equipment or system served, device model numbers, duct sizes, damper sizes, flow rates, pressure differentials, calculation of actual damper pressure drops, approach velocities, leakage rates, torque requirements, actuator model number, actuator torque capacities and pilot positioner locations.
22. Select dampers to meet their intended service with respect to maximum approach velocities and maximum pressure differential. Damper materials shall match duct construction materials in which they are installed (galvanized steel, aluminum, 304 or 316 stainless steel, etc.).
23. Aluminum dampers may be used in galvanized ductwork.

B. Operation and Maintenance Manuals:
   1. Refer to Division 01 - General Requirements.
   2. Operation and maintenance manuals shall provide descriptions of maintenance on all system components, including sensors and controlled devices. These shall include inspection requirements, periodic preventative maintenance, fault diagnosis, and repair or replacement of defective components, calibration instructions, parts lists, and name, address, and phone number of manufacturers' representative.

C. Software Manual:
   1. As part of operation and maintenance manuals, submit one software manual per workstation plus one extra copy for archive use. Software manuals shall be divided into separate parts with tabs for each part.
   2. Software Manual parts shall include:
      a. Complete description of operating system including all commands, configuration programs, printouts, logs, database functions and passwords. Describe general operating procedures, starting with system overview and proceeding to detailed description of each software command feature with sample printed displays and system function description for each option. Include instructions on verifying errors, status, changing passwords and initiating or disabling control programs.
      b. Complete description of programming language including all commands, configuration programs, control loop functions and testing. Describe general programming procedures, starting with system overview and proceeding to detailed description of each software command feature. Include instructions on creating or modifying any control algorithm or parameter, debugging, etc. This shall include all control functions, algorithms, mathematic equations, variables, setpoints, time periods, messages, and other information necessary to load, alter, test and execute custom or pre-written programs.
      c. Software Backup: Upon successful completion of acceptance testing, submit to Owner 2 archive copies of all accepted versions of source code and compiled code for all application programs and data files, on CD ROM backup disks. All control software must be readily accessible by Owner using BAS workstation hardware and software.

D. Record Drawings:
   1. Refer to Division 01 - General Requirements.
   2. Submit revised Shop Drawings indicating all changes made during project.

1.8 FCC COMPLIANCE

A. All digital equipment furnished under this contract shall have been tested and made to comply with limits for Class A computing device pursuant to Subpart J of Part 15 of FCC Rules, which are designed to provide reasonable protection against interference when operated in commercial environment. All literature shall so note and all equipment shall be so labeled to show this compliance.

## PART 2 - PRODUCTS

2.1 GENERAL

A. Pressure and temperature ratings of devices indicated in Part 2 are minimum required. All devices shall be designed to withstand maximum pressure and temperature encountered in the system.

2.2 CONTROL WIRING

A. Control wiring shall be in accordance with National Electric Code and local electrical codes. Final connection points at devices and panels shall be made at terminal blocks either integral to device or separate terminal blocks mounted inside of control panel enclosures. Use of wire nuts and crimped connections are not allowed for terminating control wiring unless approved by Engineer.

B. Refer to Division 26 for specification requirements for conduits and conductors, except as noted.

C. Signal and Power Conductors (24 V and Under):
   1. No wire smaller than #18 AWG shall be used, except for manufacturer supplied instrument specific wire, or unless otherwise specified. Use 2 wire stranded twisted/shielded pair 24 VDC for analog and/or discrete input and 24 VAC/VDC output devices. For RTD signal wiring, use #18 AWG stranded, tinned copper twisted/shielded three lead conductor.
   2. Conductors not concealed in raceway shall have UL listed plenum rated teflon insulation.
   3. Communication Cable: Use control system manufacturer’s standard communications cable or #22 to #24 AWG twisted, shielded pairs, coaxial cable, or fiber optics for communications between remote control panels/devices. Provide 250 ohm, 5 watt, 0.1% tolerance dropping resistors in 4 – 20 mA circuits as required to generate 1 to 5 V signals in 24 VDC powered instrument loops. Provide isolated instrument grounding system per manufacturer's recommendations.
   4. 24 VAC Power Conductors shall be #18 AWG, 2-wire twisted pair or larger. Provide Metal Oxide Varistors (MOVs) on 24 VAC/VDC discrete outputs connected to inductive loads to reduce noise levels (i.e., solenoid valves, motor contactors, relays, damper/valve electric actuators, etc.).
   5. Stranded twisted/shielded control conductors are required with the shields to be terminated within variable frequency Drive enclosures to reduce the effects of noise from VFD. Follow VFD manufacturer's installation instructions for wiring control conductors to VFD.

2.3 LOCAL CONTROL PANELS

A. Local control panels shall be constructed of steel or extruded aluminum with hinged door and keyed lock, with baked enamel finish of manufacturer's standard color. Construction shall comply with NEMA 1 Standards for interior panels, NEMA 4 for exterior panels.

B. Controlling instruments, temperature indicators, relays, switches and gauges shall be factory installed and permanently labeled. Devices shall be located inside or mounted on face of panel.

C. Unless otherwise indicated, mount control and adjusting switches, temperature indicators and other indicating or manually operated devices on front face of panel with black phenolic engraved nameplates.

2.4 DIRECT DIGITAL CONTROL PANEL (DDCP)

A. General:

1. Direct Digital Control Panels (DDCP) shall be microprocessor based, field programmable controllers, capable of performing control and energy management functions, and shall be UL Listed as Signaling Systems. Each DDCP shall include its own microprocessor, power supply, input/output modules, and termination modules as required to perform its intended function.
2. DDCP shall receive discrete electrical or analog electronic field input signals, convert signals for use by controller, perform control sequences, convert controller information into output signals, and provide control output signals to actuators and field control device. All inputs and outputs, including communication connections, shall be electrically or optically isolated from controller.
3. DDCP with analog input modules shall be capable of accepting any form of linear or non-linear voltage (0-5 VDC or 0-10 VDC), current (4-20 mA) or resistive input (0-1000 ohm).
4. DDCP with discrete input modules shall be capable of accepting discrete inputs from any device with isolated, dry-type contacts (no grounds or no voltage) of either normally open (NO) or normally closed (NC) configuration. Provide visible status lights (LEDs) to indicate input point status.
5. Provide input modules capable of interfacing with pulsed output type sensors as required.
6. DDCP with discrete output modules shall have isolated, dry-type contacts (no grounds or no voltage) of either normally open (NO) or normally closed (N.C.) configuration.
7. Provide manual H-O-A override switch for each discrete output point. Provide feedback point to BAS to indicate when output point has been overridden. Provide visible status lights (LEDs) to indicate output point status.
8. DDCP shall have capability to scale, offset, and display proper analog value without field hardware modification. DDCP shall convert analog input signals to digital values (A/D conversion) and convert digital values to analog outputs (D/A conversion) for modulating control purposes.
9. Failsafe hardware shall be provided such that BAS failures result in immediate return to local control. If DDCP uses database values from other DDCP and communication network fails or malfunctions, control loop outputs shall continue to function using last value received from BAS.
10. DDCP shall have ability to interface and communicate with central BAS through a dedicated network. DDCP shall be fully operable from and have all points and functions available to centrally alarm at any master DDCP or PC workstation connected to BAS network.

B. DDCP Operator's Interface:

1. Provide communications port to connect display device for operator access to all information and all operating system functions except database reports and graphics functions in each mechanical room.
2. Display keyboards to be alphanumeric with special dedicated keys for functions such as manual-auto, test, function, value, and enter.
3. Keyboard/display units shall be able to display analog variables, binary conditions, point values and condition, and other information required for analysis and adjustment.
4. Provide minimum of one permanent panel mounted keyboard and display for each mechanical equipment room. If manufacturer does not offer dedicated panel mounted keyboard and display unit, provide portable hand held keyboard and display unit. If manufacturer does not

offer dedicated hand held keyboard and display unit, provide battery powered portable PC unit with proper software and hardware to interface with local DDCP.

2.5 DIRECT DIGITAL CONTROL SOFTWARE

A. DDCP control strategies shall be Owner definable from operator terminals or workstations.

B. Software functions and algorithms shall be sufficient to enable implementation of control sequences as specified and able to maintain continuous control as intended.

C. Control functions shall include both mathematical and logical operators. Control algorithms shall include proportional, integral and derivative control (PID). Adaptive (self-tuning) PID loop parameters, if offered by DDCP manufacturer, shall not be used unless adaptive limits are used to adjust limit values based on system status; or written request is submitted and approved by Engineer.

D. Allow operator to assign unique identifiers of their choice to each connected point. Identifiers must have at least 8 alpha/numeric characters. All reference to these points in programs, reports and command messages shall be by these identifiers.

E. Provide access control (user defined passwords) for system operation. There shall be minimum of 3 access levels. First level shall allow system monitoring only. Second level shall allow monitoring and setpoint, and scheduling revision. Third level shall allow modification of control algorithms. System shall return to secured (monitoring only) mode after 5 minutes of inactive operation.

F. Each DDCP shall contain self-diagnostics that continuously monitor proper operation of panel.

G. If microprocessor malfunctions, control loop outputs shall continue to function using last value received from microprocessor.

H. Control software and hardware for equipment operation shall be selected and engineered such that equipment shall function according to sequence of operation described in section 23 0993 – Control Sequences with interruption to network communication for extended periods of time.

I. Configuration software for all controllers shall be embedded in the controllers and shall be accessible through Internet Explorer, telnet, or hyper terminal.

2.6 BACNET BUILDING CONTROLLER (B-BC):

A. BACnet Building Controllers (B-BCs) shall provide direct connection to high speed, BACnet/IP Local Area Network (LAN) and Campus Ethernet network and serve as communications router for other controllers on slower speed BACnet MS/TP or BACnet over ARCNET Floor Level Network (FLN).
   1. B-BC controllers shall be either:
      a. Tridium N4 JACE 8000
      b. NAE55

B. Communication between B-BC’s shall be through BACnet/IP communication.

C. B-BC’s shall have sufficient processor capabilities, hard-drive storage and RAM to implement all types of custom software applications and shall provide supervisory control, scheduling, trend logging & alarm handling functions as follows:
   1. Scheduling:
      a. Each B-BC shall support a minimum of 250 BACnet Schedule Objects and 250 BACnet Calendar Objects.

2. Trending:
   a. Any object in the system (real or calculated) may be logged. Sample time interval shall be adjustable at the operator's workstation.
   b. B-BC shall periodically upload trended data to networked BAS Web Application Server for long term archiving.
      1). Archived data shall be stored in standard database format and shall be made available for use in third-party spreadsheet or database programs.
3. Alarm Generation:
   a. Alarms may be generated within the system for any object change of value or state either real or calculated. This includes analog object value changes, binary object state changes, and various controller communication failures.
   b. B-BC shall periodically upload alarm logs to networked BAS Web Application Server for long term archiving.
4. B-BC's shall have uninterrupted real time clocks capable of time of day, week, and year information to the system as needed to perform software functions. Clock shall be programmed to reset twice per year to allow for Daylight Savings Time. Clocks in multiple DDC Controllers shall be synchronized to automatically match designated B-BC's or Web server. Accuracy shall be within 1 second per day.
5. All control sequences programmed into the B-BC shall be stored in non-volatile memory, which is not dependent upon the presence of a battery, to be retained. Power failures shall not cause the GDC memory to be lost, nor shall there be any need for batteries to be recharged or replaced to maintain the integrity of the controller database. The B-BC shall allow for the creation of unique application control sequences. Batteries shall maintain real time clocks for a period of at least 72 hours during power failure. Batteries shall be maintenance free and have minimum life of 2 years. When power has been restored, the following shall occur automatically:
   a. Orderly startup of controlled equipment (user defined)
   b. Continuation of control algorithms
   c. Database revision
   d. Logging of power interruption and restoration times
   e. Battery recharging
6. Provide local visual indication and system annunciation of low battery power for each battery.
7. Each B-BC shall include its own micro-processor, power supply, input/output modules, and termination modules as required to perform intended function. Systems that only allow selection of sequences from a library or table are not acceptable.
8. BACnet UDP port number to always be set to 47808 (BAC0).

## 2.7 OPERATOR'S WORKSTATION HARDWARE

A. Workstations shall communicate with BAS on as-needed basis such that other executionable programs may be processed without affecting control functions of BAS.

B. Owner will provide operator's workstations for operator interface to BAS for monitoring, control, and database management. Each workstation shall consist of the following as a minimum:

## 2.8 BACNET ROUTER

A. BACnet MS/TP to BACnet/IP and BACnet/ARCNET to BACnet/IP Routers shall perform layer 3 routing of BACnet MS/TP or BACnet/ARCNET packets over an IP network in accordance with ASHRAE 135 Annex J. The router shall provide the appropriate connection to the IP network and connections to the BACnet MS/TP or BACnet/ARCNET network. BACnet Routers shall be capable

of configuration via DHCP and Write-Broadcast-Distribution-Table messages but shall not rely on these services for configuration.

B. One router in the IP subnetwork shall be designated as the BBMD (BACnet Broadcast Management Device) and shall be indicated as so on the Network Architecture.

C. BACnet router functionality can also be incorporated into BACnet Building Controllers.

2.9 NETWORK HARDWARE

A. Provide network interface hardware for each device connected to network. Each device shall have sufficient performance as not to degrade processing speed specified.

B. Provide network cabling with sufficient performance as not to degrade communication speed specified. Cabling shall be compatible with proposed system.

C. Provide other network support devices that are required for proper operation of network, such as file servers, signal repeaters, network hubs, etc.

2.10 GENERAL INSTRUMENTATION

A. General:
1. No devices containing mercury will be allowed under this specification.

B. Pressure Gauges:
1. Refer to Section 23 2120 - Piping Specialties.

C. Thermometers (Dial-Type):
1. Refer to Section 23 2120 – Piping Specialties.

D. Analog Electronic Instrument Indicators:
1. Electronic indicators, used for displaying sensor and/or output values as measured by current or voltage, shall be panel mount type and at least 2" square. Output may be analog needle type or digital with 1/2" high LED or backlit LCD displays.
2. Electronic indicators shall be marked in appropriate units (Degrees, psi, %RH, gpm, cfm, etc.) and with appropriate range of values. Panel mounted indicators shall have minimum accuracy of 1% of scale range. Digital units shall be scaled to show 3 digits plus 1 decimal point.

2.11 DISCRETE ELECTRIC INSTRUMENTATION

A. General:
1. Electrical devices, switches, and relays shall be UL listed and of type meeting current and voltage characteristics of the project. Terminal connections shall be made at terminal blocks inside of NEMA 1 enclosures unless otherwise specified. Outdoor units shall be NEMA 4 with concealed adjustment.
2. Ratings of normally open and closed contacts shall be adequate for applied load (Minimum 5 amps at 240 V).
3. Accuracy of devices shall be ± 1% of scale with adjustable offset unless otherwise specified.

B. Temperature Switches (Electric Thermostats):
1. Line voltage or low voltage type suitable for application with adjustable setpoint and setpoint indication.
2. Low voltage type to have heat anticipation.

3. Thermostats with remote sensing bulb shall have liquid filled sensing element and exposed setpoint adjustment.
4. Wall mounted space thermostat enclosure shall have concealed sensing element and exposed setpoint adjustment.
5. Unless otherwise stated, space thermostat covers shall be brushed aluminum or brushed nickel.
6. Manufacturer's standard plastic covers may be used in lieu of metal covers.

C. Temperature Switches (Aquastats):
1. Electric 2-position type with strap-on or immersion temperature sensing element. Switch contacts closed on increasing temperature to provide start signal for unit heaters, cabinet unit heaters and high limit control for heating hot water heat exchangers.
2. Sensing element shall be set for 100°F (FA) for unit heater control. For setpoints to aquastats for hot water heat exchangers, refer to control sequences for each hot water system. Provide screw-type terminals in NEMA 12 switch enclosure for field mounting at the unit heaters.

D. Relays:
1. Equal to IDEC type RH2B-U, miniature 8 blade pilot relay with DPDT silver cadmium oxide contacts rated at 15A, 30 VDC, or 120 VAC. Coil shall match control circuit characteristics. DDC outputs shall be 24 VDC with maximum current burden of 50 milliamps. Rectangular base socket mount with blade type plug-in terminals and polycarbonate dust cover.
2. Provide DIN rail mountable (Snap type) mounting sockets equal to IDEC SH2B-05.

E. Pressure Differential Switches:
1. Adjustable set point, differential pressure type. Select switches for accuracy, ranges (20 to 80% of operating range) and dead-band to match process conditions, electrical requirements and to implement intended functions.
2. Pressure differential switches for air systems shall have pressure rating of at least 10" WG.
3. Pressure indicating differential switches for air systems shall be equal to Dwyer Series 3000 photohelic gauge.
4. Pressure differential switches for water systems shall be rated for 150 psig unless otherwise noted. Chilled water pressure differential switches shall be provided with totally sealed vapor tight switch enclosure on 300 psi body. Differential pressure switches to have 3-valve manifold for servicing.
   a. Max Temperature Rating: 300°F
   b. Repeatability: ± 1%

F. Position Switches (End Switches):
1. Provide damper position switches, as required to meet specified sequence. Rotary switches shall be cam action, lever, or proximity type. Provide damper brackets and connecting rods for connecting position switch actuation levers to damper blades or jackshafts.
2. “Tip Switches” or other position switches that contain mercury shall not be used for damper and valve end switch applications.

G. Current Switches - Constant Load, Constant Speed:
1. Manufacturers: Veris Industries, N-K Technologies, Absolute Process Instruments, Kele & Associates, R-K Electronics or approved equal
2. These shall be induction type sensors clamped over single-phase conductor of AC electrical power and shall be solid-state sensors with adjustable threshold and normally open contacts. Each current switch shall be selected for proper operating range of current.

a. Output: Solid state relay or relay contacts
b. Trip Setpoint: Adjustable by multi-turn potentiometer
c. Operating Temperature: 0 to 55°C (32 to 131°F)
d. Response Time: < 0.5 second

H. Current Switches - Variable Load, Variable Speed
1. Manufacturers: Veris Industries, N-K Technologies or approved equal
2. These shall be induction type sensors clamped over single-phase conductor of AC electrical power and shall consist of solid-state sensors with self-calibrating threshold and normally open contacts. Each current switch shall be selected for proper operating range of current.
a. Output: Solid state relay or relay contacts
b. Trip Setpoint: Self-calibrating through microprocessor
c. Operating Temperature: 0 to 55°C (32 to 131°F)
d. Response Time: < 0.5 seconds

I. Indicator Lights:
1. 1/4" minimum size. Use green for normal, yellow for warning (low/high values), and red for alarm or fail (low-low or high-high conditions). AC or DC type with voltage matched to control circuit without transformers.

## 2.12 ANALOG ELECTRONIC INSTRUMENTATION

A. Duct Mounted or Insertion Temperature Sensors:
1. Nickel or platinum RTD type, with the following minimum performance:
a. Temperature Coefficient: .00385 ohm/ohm/°C
b. Accuracy: ± .54°F + (0.005 X T) (Class B)
c. Accuracy: ± .27°F + (0.005 X T) (Class A)
T = Temperature of interest
d. Conformance: DIN-IEC 751
e. Operating Range: -50 to 170°F
0 to 99% rh
2. Install insertion sensors in stainless steel probes or wells.
3. Outside air sensors shall be weatherproof of noncorrosive construction and protected with solar shield. Mount outside air sensors on north side of building or in area intake wells for air handling systems to avoid thermal effects from direct sunlight.
4. Sensors mounted in air streams, such as air handling units, supply ducts, exhaust ducts or return ducts, shall be averaging type. Mount averaging sensor across duct area in a “Z” pattern using mounting clips specific for averaging temperature sensor probes.
5. Thermistors or nickel RTD will be acceptable in lieu of platinum RTD provided thermistor carries 5 year guarantee that the device will maintain its accuracy within a tolerance of ± 0.36°F between 32°F and 150°F, and 0.5°F between -20°F and 212°F.

B. Pressure (E-P) Transducers:
1. Manufacturers: Brandt, Johnson Controls, Honeywell, Fairchild, Kele & Associates, Siemens, Moore Industries, or TAC
2. Provide pressure transducers integral to DDC panels or separate components to convert digital analog signal to variable pneumatic air pressure signal. Units to have following characteristics:
a. Input 4-20 mA or 0-5 VDC

b. Linearity 1% of span
c. Hysteresis 0.75% of span
d. Maximum air consumption 0.008 scfm @ 20 psi

C. Magnetic Flowmeter/Transmitter:
1. Manufacturers: Onicon F-3500, or approved equal.
2. Electromagnetic induction type with linear response proportional to flow rate. Selected span shall be not greater than twice design flow range. Select units for 10:1 turndown.
3. Unit shall be complete with 150 lb raised face flanged flowtube, PTFE, EPDM neoprene or PFA liner, magnetic coils, self-cleaning 316 stainless steel or Hastelloy C4 electrode, and 4-20 mA transmitter/power supply housed in NEMA 4 enclosure. Transmitter shall be fully field configurable microprocessor based unit.
   a. Minimum Accuracy: ± 0.5% of Span including hysteresis
   b. Repeatability: ± 0.1% of reading
   c. Operating Temperature: 15-250°F
   d. Power Requirements: 120 VAC / 60 Hz
4. Transmitter shall be integral mounted on flow meter.
5. Provide remote mounted indicator/transmitter. Indicator to be 1/2" LCD or back lit LED type.

D. Ultrasonic Flowmeter (For WFM-CHW):
1. Manufacturer: Flexim Fluxus F70x
2. These shall be transient time ultrasonic type flow meters to provide linear output signal proportional to flow rate. Sensors shall be mounted to pipe according to pipe size and materials per manufacturer's installation instructions.
3. Instrument shall be microprocessor based and shall be fully field configurable via Highway Addressable Remote Transmitter (HART) communication protocol from controller.
   a. Sensor Mounting: Strap-on to pipe
   b. Converter Mounting: Remote Wall Mount
   c. Process Temperature Limits: 0°F to 300°F
   d. Performance:
   e. Accuracy: ± 0.5% of Span
   f. Repeatability: ± 0.5% of Span
4. Process Media Requirements:
   a. Maximum Entrained Gas: 0.75% minimum
   b. Maximum Turbidity: 7500 ppm minimum
5. Power Requirements: 120VAC / 60 Hz
6. Minimum Turn-Down: 10 to 1 of full scale
7. Minimum Enclosure Rating: NEMA 4
8. Output: 4-20 mA DC current or 10 kHz Frequency
9. Materials of Construction:
   a. Sensor: 316 Stainless Steel
   b. Strap Material: 316 Stainless Steel
10. Options:
   a. Local Indication: Digital LCD 3 digit minimum
   b. Smart Transmitter Protocol: HART
11. Calibration Shift and Ambient Effects:

a. Position: Transmitter shall operate in any position.
b. Vibration: Transmitter shall not be affected by industry normal piping vibration when operating within its normal range.
c. Ambient Temperature: Transmitter shall not be in error more than 1.0 percent of span over change in ambient temperature of 100°F.

E. Conditioning Orifice Plate Meter (COP):
1. Manufacturer: Rosemount 3051SFC
2. The COP shall consist of four symmetrical orifice holes to allow flow separation independent of flow rate, pressure or temperature. Meter shall have both volumetric and mass flow outputs. COP shall be capable of installing between Orifice Flange Unions.
3. Instrument shall be microprocessor based and shall be fully field configurable via Highway Addressable Remote Transmitter (HART) communication protocol from controller.
   a. Sensor Mounting: Paddle type
   b. Converter Mounting: Remote Wall Mount
   c. Process Temperature Limits: -40°F to 450°F
   d. Process Pressure Limits 6000 psig at 100°F
   e. Accuracy: ± 1.15% of Span
   f. Repeatability: ± 1.15% of Span
4. Power Requirements: 120VAC / 60 Hz
5. Minimum Turn-Down: 14 to 1 of full scale
6. Minimum Enclosure Rating: NEMA 4
7. Output: 4-20 mA DC current or 10 kHz Frequency
8. Materials of Construction:
   a. Primary Element: 316 Stainless Steel
9. Options:
   a. Local Indication: Digital LCD 3 digit minimum
   b. Smart Transmitter Protocol: HART
10. Calibration Shift and Ambient Effects:
    a. Position: Transmitter shall operate in any position.
    b. Vibration: Transmitter shall not be affected by industry normal piping vibration when operating within its normal range.
    c. Ambient Temperature: Transmitter shall not be in error more than 1.0 percent of span over change in ambient temperature of 100°F.

F. Verabar (Alternate) :
1. Manufacturer: Verabar
2. The meter shall consist of self-averaging primary flow sensor measures the critical static pressure component on both sides of the sensor with dual, multiple ports located ahead of the point at which the fluid separates from the probe.
3. Instrument shall be microprocessor based and shall be fully field configurable via Highway Addressable Remote Transmitter (HART) communication protocol from controller.
   a. Converter Mounting: Remote Wall Mount

| | | |
|---|---|---|
| b. | Process Temperature Limits: | -40°F to 450°F |
| c. | Process Pressure Limits | 1000 psig at 100°F |
| d. | Accuracy: | ± 1.0% of Span |
| e. | Repeatability: | ± 0.1% of Span |
| 4. | Power Requirements: | 120VAC / 60 Hz |
| 5. | Minimum Turn-Down: | 10 to 1 of full scale |
| 6. | Minimum Enclosure Rating: | NEMA 4 |
| 7. | Output: | 4-20 mA DC current or 10 kHz Frequency |
| 8. | Materials of Construction: | |
| a. | Primary Element: | 316 Stainless Steel |
| 9. | Options: | |
| a. | Local Indication: | Digital LCD 3 digit minimum |
| b. | Smart Transmitter Protocol: | HART |
| 10. | Calibration Shift and Ambient Effects: | |
| a. | Position: | Transmitter shall operate in any position. |
| b. | Vibration: | Transmitter shall not be affected by industry normal piping vibration when operating within its normal range. |
| c. | Ambient Temperature: | Transmitter shall not be in error more than 1.0 percent of span over change in ambient temperature of 100°F. |

G. Electronic Controllers:

1. Provide dedicated function type controllers with electronic analog and/or discrete electric type inputs and electronic analog and/or discrete electric type inputs, capable of performing sequences specified. Analog loop controllers shall have PID programs. Units shall have face-plate with adjustable setpoints, calibration, offset, gain factors, and visual display of all parameters.

## PART 3 - EXECUTION

3.1 GENERAL

A. Install control equipment, wiring and air piping in neat and workmanlike manner to satisfaction of Architect and/or Engineer, and in accordance with manufacturer's recommendations. Maintain clearances, straight length distances, etc. required for proper operation of each device. Mark and detail exact location of inline devices, wells, and taps to be installed by Mechanical Contractor on Coordination Drawings.

B. Coordinate timely delivery of materials and supervise activities of other trade contractors to install inline devices such as immersion wells, pressure tappings, any associated shut-off valves, flow switches, level switches, flow meters, air flow stations, and other such items furnished by Control Contractor that are to be installed by Mechanical Contractor.

C. Install control devices in accessible location.

D. Mount motor control devices within 5 ft of disconnect switch, or starting device furnished by Electrical Contractor unless noted otherwise. Maintain required NEC clearances.

## 3.2 CONTROL WIRING

A. Provide all electrical wiring required for complete functional control systems, including power circuit to control panels, both line and low voltage, in accordance with all applicable local codes, and the latest version of National Electric Code and NFPA when applicable.

1. Voltage drops for all low voltage circuits shall be calculated prior to installing low voltage circuits. Voltage drop calculations shall be made available to Engineer on demand.

B. Control panels serving equipment fed by emergency power shall also be served by emergency power. Equipment fed by emergency power is so indicated on mechanical equipment schedules and electrical motor schedules.

C. Control panels shall be powered by local UPS (Uninterruptible Power Supply) to ensure continued control of equipment powered by site standby power sources when primary power source is lost. Devices such as Operator Workstations, Floor Level and Building Level Controllers and other critical devices shall be provided with UPS power.

D. Power wiring to control compressors and dryers will be provided by Electrical Contractor. Provide field mounted starters to Electrical Contractor for installation and supervise installation.

E. Install control wiring in raceway system per Division 26 - Electrical, unless otherwise noted.

F. BAS Network Communication Cable:

1. Run communication cable in separate raceways or in cable trays with proper clearances.
2. Install special cable connectors in accordance with manufacturer's recommendations.
3. BAS network communication cable shall not be spliced.

## 3.3 LOCAL CONTROL PANELS

A. Provide local control panel for each system where more than one control device requires field mounting (air handling units, exhaust fans, miscellaneous control systems including pump controls, heat exchanger controls, etc.). Single devices may be exposed mounted on piping, wall or ductwork. Install local control panel where indicated on drawings or suitable location adjacent to system served.

B. Mount panel on wall with suitable brackets or on self-supporting stand. Mount top of panel no higher than 6 ft above floor. Install panels so front cover door can swing full open without interference.

C. Label all local control panels with its respective unique ID number per Section 20 0553 - Mechanical Systems Identification.

## 3.4 ADJUSTMENT AND COMPLETION CHECK LIST

A. After completion of installation, follow check standard list procedures defined by instrument vendors to adjust and calibrate all thermostats, control valves, control actuators, controllers, sensors, and other equipment provided in this Contract.

## 3.5 OWNER TRAINING

A. Provide minimum of 8 hrs of on-site training to Owner's representatives. Conduct training sessions during normal business hours after system start-up and acceptance by Owner. Scheduling of training session(s) will be established by Owner.

## 3.6 OVERALL BAS ARCHITECTURE

A. Provide hardware/software to update database in less than 1 second for fast-acting control loops such as pressure control, air or water volume control, and air handling unit temperature control, or 10 seconds or less for all other control loops.

B. Control loop software algorithm for each analog control loop shall reside on the same controller as all inputs and outputs required for that specific control loop.

C. Networks that operate via polled response or other types of protocols that rely on central processors, file servers, or other such devices to maintain or manage peer-to-peer communications shall have redundant components to maintain network in the event of failure at central device. Provide automatic changeover to redundant device upon failure of any central type processor without operator intervention.

D. Network shall be multi-drop digital transmission network. Network shall provide communication link between operator's workstation and all remote DDCP and field panels.

E. Each multi-drop trunk shall be within manufacturer's allowable line lengths without signal degradation. All multi-drop trunks shall be interfaced to system via standard EIA or other industry recognized interfaces so that single failure does not disrupt or halt network.

F. Communications between DDCP's and operator's workstations shall allow multiple users to access and use system simultaneously with no loss of system performance.

G. Provide levels of connected networks to connect all DDCP, including terminal DDCP. Communications to terminal devices shall be similar to capabilities and functions of other DDCP and shall be transparent to operator.

H. Number of nodes (devices connected) on any one network shall not exceed 50 % of maximum node capacity published by equipment manufacturer. Provide additional hardware, DDCP, network controllers, etc.) to meet this requirement.

I. Alarm reports from DDCP shall not be impeded by use of either remote or local monitor, nor control stations on network either in access mode or programming mode.

J. Provide telephone modem for remote access to system from remote operator's workstation. Coordinate telephone communications with Owner for modem connection point.

## 3.7 DIRECT DIGITAL CONTROL PANELS

A. DDC Panel Usage:
   1. Select DDCP to provide speed of response required for each control loop type.
   2. Each DDCP shall have sufficient I/O capacity to perform specified control sequences and/or included points listed in any point schedules. If DDCP does not have sufficient capacity, provide additional panels to achieve required point count.
   3. Analog and critical safety discrete control loops shall have inputs and outputs into/from the same DDCP. Analog control loops for major equipment (chilled water, hot water, convertors, air handling units, etc.) shall have PID control.
   4. For valves and dampers within 100 ft of its DDCP, mount current to pneumatic (I/P's) convertors within DDCP or in adjacent panel. Otherwise mount I/P convertors at valve or damper. Provide pressure gauges on main air, and all control output signals.

B. Cabinets:
   1. Provide local control cabinets for all DDCP. DDCP cabinets may be used directly if enclosures are rated for NEMA 1. All cabinets shall utilize one masterkey. Provide 2 spare key sets to Owner.

3.8 SOFTWARE

A. Software from panels shall be permanently stored on CD ROM.

B. Provide the latest version of all standard software, including, operating system and control software. Include any software updates for period of 1 yr coinciding with warranty period. No beta released software shall be used.

3.9 INITIAL PROGRAMMING

A. Control Contractor shall provide initial programming of all controllers to accomplish sequences specified.

B. Provide back-up documentation per software manual submittals for all programs in both written and magnetic media formats.

C. Provide programming of menus to assist new users in accessing screen displays of each point group. Point groups (user definable) shall be initially arranged by DDCP for major equipment and by floor and area for terminal devices. Terminal devices shall also be grouped by air handling system where applicable.

D. Program historical file for run-times and number of start/stops of all motor driven equipment and filters.

E. Program maintenance alarms based on run-times and number of start/stops for all motor driven equipment.

F. Program alarms using the following levels:
   1. Level 1 - Maintenance alarm, requiring attention within one to 2 days. (Examples; 2-3°F temperature variance from setpoint, 15-25% relative humidity variance, etc.)
   2. Level 2 - Low Level Alarm, requiring attention within 8 hours, preferably during the same shift. (Examples; 4°F or more variance from setpoint, 30% relative humidity or more variance from setpoints, etc., excess start/stops per day, etc.)
   3. Level 3 - Critical Alarm, requiring immediate attention. (Examples; non-operation of primary equipment, H-O-A overrides.)
   4. Level 1 and 2 alarms shall not interrupt current user operation, but shall be logged into alarm summary file indicating status, acknowledgment, and by whom. Level 3 alarms shall interrupt user via audible and/or flashing warning until acknowledged without losing any work in progress. When alarms are acknowledged, the program shall display point group or appropriate graphic display. Level 3 alarms shall also be logged into alarm summary file similar to Level 1 and 2 alarms.

3.10 POINT LIST

A. Provide all points required to implement control sequences specified, whether or not they are listed in schedules. In addition to control points, provide additional monitoring points.

B. All outputs, whether sequenced or not, shall have separate programmable hardware outputs. For air handling units, minimum outside air, maximum (economizer) outside air, return, relief air, smoke

dampers, heating coil valves, cooling coil valves, humidifier valves, etc., shall each have separate output.

## 3.11 GENERAL INSTRUMENTATION

A. Pressure Gauges (Pressure Indicators):
   1. Install pressure gauge for indication of supply and control pressure in pneumatic systems at output of controllers, I/P transducers, electric air solenoid valves and pressure switches, and other points where visible indication of air pressure is required for operation and maintenance purposes.
   2. Provide test port for quick connection of test gauges at valve, damper motor and other actuator branch lines.
   3. Pressure gauge tappings in piping will be installed by Mechanical Contractor.

B. Thermometers (Temperature Indicators):
   1. Install thermometers at each point of temperature transmission and control except those indicated at local control panels. Install thermometers to permit easy reading from floor or operating platform (within 3 ft of line of sight). Provide remote bulb thermometers with readout indicators mounted within 3 ft of line of sight whenever sensing point is more than 3 ft from line of sight.
   2. Thermometer wells in piping will be installed by Mechanical Contractor.

## 3.12 LOCAL CONTROL PANELS

A. Install remote mounted devices, controllers, I/O terminal blocks, power supplies, etc. inside of local control panels.

B. Locate panels as shown on drawings.

C. Locate panels adjacent to equipment served with a minimum of 3 ft clearance in front of the door. Provide sufficient clearances to allow full door swing and full access to all internal components. Submit proposed panel locations with shop drawings.

D. Mount top of panel between 5 and 6 ft above floor so gauges and indicators are at eye level.

## 3.13 DISCRETE AND ANALOG INSTRUMENTATION

A. Wall Mounted Space Sensors:
   1. Install space thermostats/sensors where indicated, as required to perform specified controls, or directed to meet job site conditions.
   2. Mount thermostats/sensors 5 ft above floor unless otherwise indicated.
   3. Mount space thermostats/sensors with accessible setpoint adjustment or temperature reading (thermometer or digital temperature readout) at 4 ft above floor meeting ADA requirements.
   4. Any room thermostats/sensors mounted on exterior walls shall be mounted on thermally insulated sub-base.
   5. Relocate room thermostats/sensors if required due to draft, interferences with cabinets, chalkboards, etc., or improper sensing.
   6. Mount room thermostats/sensors in corridors, stairways and public toilets 7 ft above floor.
   7. Room thermostats/sensors in corridor, stairways, vestibules and toilets shall be aspirating type.

B. Water Flow Meters and Flow Switches:

1. Install flow measuring devices with recommended straight pipe diameters upstream and downstream of elbows, tees, valves, or other fittings, that cause uneven turbulent flow conditions.
2. If no recommendations are given, provide straight pipe equal to 10 pipe diameters upstream and 5 pipe diameters downstream of flow measuring device.

C. Sensor Wells:

1. Mount sensor wells as shown on drawings as required by other contract documents. Wells mounted in pipe 3" and larger may be installed in horizontal or vertical lines provided element is always in flow (for condensate and other gravity return lines, install in bottom of pipe). Wells mounted in pipe 2-1/2" and smaller shall be installed at elbow tee fittings with well pointed upstream. Minimum of 2" pipe size for elbow tee installation.

D. Transmitters and Indicators:

1. Locate transmitters at sensing device or within 100 ft for remote mounted transmitters. For hot systems (150°F and higher) mount electronics on side of pipe or remotely mount. For indicating type instruments, locate indicating element with 6 ft of floor with readout easily visible from floor level. Provide remote readouts if necessary.

**END OF SECTION**

**SECTION 23 0993 CONTROL SEQUENCES**

## PART 1 - GENERAL

1.1 RELATED WORK

A. Section 23 0901A - Control Systems

B. Section 20-0514 – Variable Frequency Drive (VFD) System

1.2 INPUT AND OUTPUT DEFINITIONS

A. It is the intent of the drawings and the control sequences to provide for complete fully functioning systems. The following sequences list many, but not all control points required. Contractor shall review and utilize Control/Flow Diagrams, DDC Points Schedule, and plans to supplement the information provided in these sequences.

B. Definition of Point Type
   1. AI Analog input (RTD, 4-20 mA, 0-5 volt DC, 0-10 volt DC, etc.)
   2. DI Digital (Binary) input
   3. AO Analog output (4-20 mA, 0-5 volt DC, 0-10 volt DC, etc.)
   4. DO Digital (Binary) output

1.3 ALARMS

A. All Control and alarm setpoints shall be adjustable from the operator's workstation for the Tridium Enterprise System or at local controllers via laptop software unless otherwise noted.

B. BAS shall annunciate alarm conditions when analog input values exceed their programmed ranges.
   1. Unless otherwise noted, alarm ranges shall be:
      a. Air Temperature: +/-5□F from setpoint
      b. Water Temperature: +/-10□F from setpoint
      c. Humidity: +/-10% RH from setpoint
      d. Air Pressure: +/-0.5" W.C. from setpoint
      e. Water Pressure: +/- 5 psig from setpoint
      f. Flow: +/-25% of maximum flow range
      g. Level or Value: +/-5% of maximum level or value from setpoint

C. All references to alarms, alarm setup, and alarm enunciation are to be programmed in the UK Tridium system and shall not be programmed in the BAS to annunciate at a non-Tridium workstation. Controls contractor shall coordinate all alarming with UK staff for required alarms.
   1. The contractor is set up the alarm parameters specified by the system sequences of operations without enabling the alarms. Contractor is to provide a list of points containing alarm extensions to PPDMC. PPDMC will be responsible for doing the alarm names, alarm texts and enabling the alarm points provided on the list.

D. Program alarm levels as indicated in sequences, based on the following levels.
   1. Urgent
   2. High Priority
   3. General Maintenance

E. All Input/Output points and BAS data objects shall have alarm parameters available for defining alarms.

F. Alarm monitoring and programming functions shall be restricted by password protection.

G. Coordinate alarm action requirements (printing, automatic dialing, etc.) with Owner.

H. Alarms shall remain active until alarm condition has cleared and alarm is reset manually.

1.4 SETPOINTS

A. All controlling setpoints shall be field-adjustable. The Control Contractor shall work in conjunction with the owner, commissioning agent, and Testing and Balancing Contractor to field adjust all final set points.

B. Control Contractor shall verify setpoints, time intervals, and limits based on actual field conditions. All setpoints, time intervals, and limits shall be optimized to achieve stable system operation, prevent damage to equipment, minimize maintenance requirements, and eliminate nuisance alarms (such as premature filter loading, false tripping of freezestats, and other similar conditions).

C. The terms 'Adjustable Temperature Sensor' and 'Non-adjustable Temperature Sensor' are used to describe space temperature sensors.

1. Adjustable/User-Adjustable Temperature Sensor – space temperature sensor is provided with a slide or buttons that allow the space occupant to locally adjust the setpoint. All Adjustable Sensors shall be programmed with a locked/limited range. The local display shall only display the limited range (i.e if the limited range is 70-74F, the display will stop at those limits, and will not show temperatures that cannot be achieved because of the locked range). The range shall be displayed on the BAS graphic for each space and shall be adjustable from the graphic.

D. Non-Adjustable Temperature Sensor – Flat plate type or plastic with no local adjustment. Setpoints are programmed at the BAS and shall be adjustable from the graphic for each room.

1.5 SWITCH POINT ACTUATION

A. Provide each switch/alarm trip point with an adjustable time delay to prevent nuisance tripping. These time delays apply to all switch points whether hardware or software and for normal operation. Additional or longer delays may be necessary during start-up or shut down as noted herein.

B. Unless otherwise specified, the time delay shall be as follows:

| | | |
|---|---|---|
| 1. | Process or operation ..... | Time Delay |
| 2. | Flow ..... ..... | 2 minutes |
| 3. | Motor starter ..... ..... | 1 minute |
| 4. | Liquid pressure .... ..... | 1 minute |
| 5. | Gas pressure ..... ..... | 1 minute |
| 6. | Pressure differential ..... | 1 minute |
| 7. | Level ..... ..... | 30 seconds |
| 8. | Valve limit switch . ..... | 2 minutes |
| 9. | Temperature indoor ..... | 5 minutes |
| 10. | High/Low Pressure Switch ..... | 5 second |
| 11. | High/Low Temperature Switch ..... | 5 second |

C. If the time delays are less than the controller scan rate, the minimum controller scan rate shall be the time delay.

1.6 VARIABLE FREQUENCY DRIVES

A. VFDs shall be switched between HAND, OFF, and AUTO modes via manual local control adjustment at each VFD.

B. Control loops other than volume/pressure control loops using VFD speed outputs, shall continue to function in the HAND mode.

C. Motors shall operate at constant speed in the HAND mode. Remote start/stop control shall be via local control at each VFD.

D. All safety devices shall be wired as to be still active in the HAND mode.

E. Coordinate communication requirements with VFD manufacturer. All monitoring and control point data from VFD interface card shall be mapped to the BAS. VFD start/stop control and speed control points shall be hard wired from the BAS controller to the drive.

1.7 SAFETY DEVICES

A. All safety devices (low limits, high limits, etc.) shall have local manual reset.

B. All safety devices shall be wired as to be still active when a VFD is in the HAND mode.

1.8 PRESSURE TRANSMITTER/SENSORS

A. Pressure transmitter/sensors shall be hardwired directly back to the BAS controller that provides the control signal to the VFD(s). Sharing the static pressure or pressure differential signal via the network is not allowed for control.

1.9 PUMP OR FAN OPERATION FEEDBACK

A. When a device is required to run, the control system shall command the device to start by energizing the discrete output to the motor starting device. The device shall run until the control system commands the device to stop by de-energizing the discrete output to the motor starting device or an equipment failure occurs.

B. Equipment failure is detected by opening of a low current switch, pressure differential switch, current input in Low-Low alarm condition (VFD), or VFD fault input when the device is commanded on, or is operating, or anytime the device status does not match the commanded state. If a failure occurs, the device shall be stopped and an alarm shall be generated at the BAS, designating that device has failed (see each sequence for alarm type details). This interlock shall be disabled for 30 seconds (FA) after the device is initially commanded to start. Failed pump or fan shall be locked out until manually reset through the BAS.

C. Current switches affixed to one of the motor feed cables or pressure differential switch piped across inlet and outlet of fan or pump shall be used for equipment status indication.

## PART 2 - PRODUCTS

2.1 MATERIALS

A. Refer to sections stated under related work.

## PART 3 - EXECUTION

3.1 CONTROL SEQUENCE

A. Systems shall perform in accordance with the following.

3.2 EXISTING CONTROL SYSTEMS - CONTROL SEQUENCE

A. Existing sequence of operations shall remain the same, unless indicated.

3.3 BUILDING STEAM CONSUMPTION MEASUREMENT – CONTROL SEQUENCE

A. BAS shall calculate and log building steam system consumption totalized hourly, daily and monthly logs as measured by flow elements in steam building piping.
   1. Units and log timeframe to be manually selectable through BAS.

B. Monitor and Alarm:
   1. Monitor, through BAS, the following points associated with steam consumption:
      a. Steam Meter (FM-B1) – (AI)
      b. Steam Meter (FM-B2) – (AI)
      c. Steam Meter (FM-B3) – (AI)
      d. Steam Meter (FM-HPS) – (AI)

3.4 NATURAL GAS CONSUMPTION MEASUREMENT – CONTROL SEQUENCE

A. BAS shall calculate and log the boiler natural gas consumption totalized hourly, daily and monthly logs as measured by flow elements in natural gas piping.
   1. Units and log timeframe to be manually selectable through BAS.

B. Monitor and Alarm:
   1. Monitor, through BAS, the following points associated with steam consumption:
      a. NG Meter (GM-B1) – (AI)
      b. NG Meter (GM-B2) – (AI)
      c. NG Meter (GM-B3) – (AI)

3.5 CHILLED WATER SYSTEM

A. System Description:
   1. Refer to drawing IC700.
   2. Chilled water system is existing.
   3. Chilled water system provides the chilled water for the Central Utility Plant, to provide chilled water for the University of Kentucky Campus.
   4. Chilled water system consists of:
      a. 6 existing cooling towers
      b. 5 existing condenser water pumps
      c. 1 new (PCW-6) dedicated condenser water pump
      d. 5 existing chiller evaporator-condenser units
      e. 1 new (CH-6) chiller evaporator-condenser unit
      f. 5 existing chiller pumps each associated with specific chillers
      g. 1 new (PC-6) dedicated chilled water pump associated with (CH-6)

h. 6 secondary loop pumps

5. New components of the chilled water system will follow the existing chilled water sequence.
6. A Chilled water meter shall be installed in the main primary chilled water supply line, and shall be used to monitor and trend building primary chilled water consumption.

B. Chillers
1. Existing chillers controller have a menu system allowing the user to choose from the following commands:
   a. State 0:
      1). Disable chiller
   b. State 1:
      1). Enable compressor 1
   c. State 2:
      1). Enable compressor 2
   d. State 3:
      1). Enable both compressors
2. New chiller (CH-6) shall follow existing chiller sequence.
3. New chiller controller will have a menu system allowing the user to choose from the following commands:
   a. State 0:
      1). Disable chiller
   b. State 1:
      1). Enable chiller

C. Dedicated Chilled Water Pumps
1. New chilled water pump (PC-6) shall be commanded on when associated chiller (CH-6) is enabled. When associated chiller (CH-6) is disabled the chilled water pump (PC-6) will continue to operate for 5 minutes (FA) and then shut down.
2. On failure of chilled water pump, as sensed by current switch, pump shall be locked out, and an alarm shall be annunciated at the BAS. Pump shall remain locked out until reset manually.
   a. Pump failure shall be defined as anytime the pump status does not match the commanded state when commanded state is on.

D. Dedicated Condenser Water Pump
1. New condenser water pump (PCW-6) shall be commanded on 2 minutes (FA) after dedicated chilled water pump (PC-6) is enabled and at least one tower isolation valve is open. When associated dedicated chilled water pump (PC-6) is disabled the dedicated condenser water pump (PCW-6) will shut down.
2. On failure of chilled water pump, as sensed by current switch, pump shall be locked out, and an alarm shall be annunciated at the BAS. Pump shall remain locked out until reset manually.
   a. Pump failure shall be defined as anytime the pump status does not match the commanded state when commanded state is on.

E. Power Failure Mode
1. The chilled water system is not connected to emergency power.
2. When normal power is lost valves shall remain in their last position, fail open, or fail closed as indicated on drawings.

3. Upon resumption of normal power, the chilled water system shall be re-started and shall resume normal operation as described in sequences above. Refer to Priority Sequence for restart sequence.

F. Monitor and Alarm

1. Monitor, through the BAS, the following points and generate the alarms indicated (refer to Points List for additional monitoring points):
   a. Chilled water meter (WFM-CH-6) Flow – AI
   b. Chilled water meter (WFM-ECT-6) Flow - AI
   c. Condensate flow switch – DI
   d. Chiller flow switch – DI
   e. Dedicated chilled water pump status – DI
   f. Chiller compressor motor status -DI
   g. VSD harmonic filter – DI
   h. VSD cooling system run – DI
   i. Unit Fault code
   j. Unit Start Inhibit Code
   k. Unit modified run code
   l. Unit cycling fault code
   m. Unit safety fault code
   n. unit operation code
   o. motor phase 1 current - AI
   p. motor phase 2 current - AI
   q. motor phase 3 current - AI
   r. motor current PCT
   s. Leaving condenser water temperature - AI
   t. Entering condenser water temperature - AI
   u. Oil differential pressure - AI
   v. condenser pressure - AI
   w. evaporator pressure - AI
   x. entering chilled water temperature - AI
   y. leaving chilled water temperature - AI
   z. Rem heating setpoint - AO
   aa. rem motor current setpoint - AO
   bb. rem leaving chilled water temperature setpoint - AO
   cc. sensor reference positions - DI
   dd. sensor active position - DI
   ee. oil pump pressure - AI
   ff. oil sump pump pressure - AI
   gg. number of starts - AI
   hh. operating hours - AO
   ii. condensate refrigerant level - DI
   jj. oil sump pump temperature - AI
   kk. discharge temperature - AI

ll. condensate saturation temperature - AI
mm. evaporation saturation temperature - AI
nn. motor current limit activity
oo. leaving chilled water temperature active setpoint - AO
pp. filter supply KVA - AI
qq. filter max current - AO
rr. filter max voltage - AO
ss. VSD output frequency - AI
tt. ACC surge count - AI
uu. VSD CD bus current - AI
vv. VSD CD bus voltage - AI
ww. Input KWH - AI
xx. Input power - AI
yy. VSD output voltage - AI
zz. Anti-recycle time remaining - AI
aaa. VSD converter sink temperature - AI
bbb. VSD internal ambient temperature - AI
ccc. MTR winding average temperature - AI
ddd. MTR OP shaft end temperature - AI
eee. MTR shaft end temperature - AI
fff. MTR OP shaft end vibration - AI
ggg. HP leaving condenser setpoint - AO
hhh. Operating hours' offset
iii. Operating hours' log
jjj. Input KWH offset
kkk. Input KWH load
lll. Heat recirculation head pressure - AI
mmm. Heating active setpoint - AO
nnn. Leaving heat condenser temperature - AI
ooo. Drop leg refrigeration temperature - AI
ppp. Condenser refrigerant level ACC map output frequency - AI
qqq. Pre rotation vanes position - DI

## 3.6 PLUMBING MONITORING POINTS

A. Monitor, through BAS, the following points associated with plumbing system and generate the alarms indicated:
   1. Duplex Sewage Ejector pump (SE-1) – (dry contact)
      a. General High Priority Alarm
   2. Duplex Sewage Ejector pump (SE-2) – (dry contact)
      a. General High Priority Alarm
   3. Basin High Level Float
      a. General High Priority Alarm
   4. Pump current switch – each pump (DI)

a. Generate High Priority alarm if pump does not match commanded state within 60 seconds (FA) of commanded change of state.

**END OF SECTION**

# SECTION 23 2116 PIPE AND PIPE FITTINGS

## PART 1 - GENERAL

### 1.1 RELATED WORK

A. Section 20 0529 - Mechanical Supporting Devices

B. Section 23 0594 - Water Systems Test Adjust Balance

C. Section 23 0901A - Control Systems

D. Section 23 2118 - Valves

E. Section 23 2120 - Piping Specialties

### 1.2 REFERENCE

A. Work under this Section is subject to requirements of Contract Documents including General Conditions, Supplementary Conditions, and sections under Division 01 General Requirements.

### 1.3 DESCRIPTION

A. This Section includes pipe and pipe fitting specifications and installation requirements for heating and cooling systems.

B. Specification of an item in this or any other sections shall not relieve Contractor from providing all items, articles, materials, operations, methods, labor, equipment and incidentals necessary for a complete and functional system.

C. Use only new material, free of defects, rust and scale, and guarantee for services intended.

D. Use material meeting the latest revision of ASTM specifications as listed in this specification.

E. Follow local codes if they require other types of pipe or joints.

F. Use only long radius elbows having centerline radius of 1.5 pipe diameters unless otherwise indicated.

G. Manufacturer, pressure class, size and heat code of each fitting and flange shall be permanently identified on its body in accordance with MSS SP-25.

H. Where size for a pipe segment is not indicated, the pipe segment size shall be equal to the largest pipe segment to which it is connected. Transition to smaller size shall occur on the side of fitting where smaller size is indicated.

I. Unless otherwise indicated, fittings and accessories connected to pipe shall be of the same material as the pipe.

J. Unless otherwise indicated, construct piping for highest pressures and temperatures in respective system in accordance with the latest revision of the applicable Sections of ASME Code for pressure piping, ASME B31 including the following:

1. B31.9 ..... Building Services Piping

2. B31.1 .....Power Piping
3. B31.3 .....Process Piping

K. Boiler external piping shall comply with the latest revision of Section 1 of ASME Boiler and Pressure Vessel Code. This Contractor shall be responsible for materials, installation, testing and certification in accordance with the Code.

## 1.4 SUBMITTALS

A. Shop Drawings for each piping system for all pipe sizes including, but not limited to, the following:
1. Name of system
2. Pipe; ASTM number, grade if known, type, wall thickness, material
3. Fittings; ASME number, grade if known, class, type, wall thickness, material
4. Joint type
5. Flanges; ASTM number, grade, class, type, material
6. Bolts and nuts; material
7. Thread joint sealants; material
8. Flange gaskets; material, rating
9. Unions; ASTM number, type, material, rating
10. Type of welding
11. Welding Quality Control Program
12. Test pressure and media
13. Pipe flushing/cleaning plan
14. Pipe cleaning method
15. All other appropriate data

B. Submit pipe certification as specified under Pipe Certification in this Section.

C. Submit required documents as specified under Pipe Welding in this Section.

D. Provide Flushing and Cleaning Plan:
1. Submit pipe flushing/cleaning plan for water, fluid, steam and condensate systems for approval. Plan shall detail methods for compliance with requirements of this section, including:

a. Flushing and cleaning procedure narratives.
b. Size, power source, and connection points of contractor provided pumps that will be used for flushing and cleaning.
c. If Contractor proposes to utilized project system pumps, method of protecting pumps from damage and developing required velocity of section of piping to be flushed.
d. Method of sectionalizing piping to obtain required velocity.
e. Minimum velocities at each section of pipe, clearly indicating any sections where 6 fps cannot be achieved.
f. Location and means of temporary bypasses for coils, control valves and other equipment.
g. Flushing schedule and drawings or diagrams that will be used for inspection and sign off prior to and after procedure, at Owner's option.

2. Submit documents showing verification of flushing/cleaning following specified requirements and results.

## 1.5 PRODUCT DELIVERY, STORAGE AND HANDLING

A. Furnish pipe with plastic end-caps/plugs on each end of pipe. Maintain end-caps/plugs through shipping, storage and handling to prevent pipe-end damage and eliminate dirt and construction debris from accumulating inside of pipe.

B. Where possible, store materials inside and protect from weather. Where necessary to store outside, elevate well above grade and enclose with durable, waterproof wrapping.

C. Before shipping, all carbon steel piping shall be free of rust and scale, and furnished with plastic end caps/plugs on each end of pipe.

## 1.6 PIPE WELDING

A. Procedure and Welding Qualification Records:
   1. Submit Welding Procedure Specifications (WPSs) and their supporting Procedure Qualification Records (PQRs) to be used on the work to Engineer for review and approval prior to performing any welding. These documents shall meet requirements of ASME B31.1 and B31.9, as applicable.
   2. Unless otherwise indicated, welding shall be done using only the following processes:
      a. Shielded Metal Arc Welding (SMAW), also known as "stick" welding
      b. Gas Tungsten Arc Welding (GTAW), also known as TIG and Heliarc welding
      c. Gas Metal Arc Welding (GMAW), also known as MIG welding
      d. Flux-Cored Arc Welding (FCAW), a variation of GMAW
      e. Submerged Arc Welding (SAW)
         3. Root pass must be applied by only GTAW process with argon gas purge for stainless steel pipe.
         4. Unless otherwise stated, fabrication, installation, inspection, examination and testing shall be in accordance with ASME B31.1 or B31.9, as applicable.
         5. Backing rings (chill rings) or consumable inserts are not allowed, unless specifically requested by Owner or Engineer.

B. Quality Control Program:
         1. Submit written quality control program for review and approval prior to implementing any welding on this project. Quality control program shall include the following as minimum:
      a. Explanation of how Contractor will assure proper fitup for each weld.
      b. Explanation of how Contractor will document welds performed by individual welding operators for systems under ASME B31.1.
      c. Explanation of how Contractor will assure that proper welding procedure is being followed.
      d. Credentials of personnel responsible for required weld examinations.

C. Weld Inspection and Examination:
         1. Provide examination services for all welding for this Project. Examination shall be in accordance with requirements of ASME B31.1, Table 136.4 or B31.9, as applicable.
         2. Periodically, as welding progresses, submit report, signed by weld examiner, indicating status of project welding quality.
         3. Arrange with Owner's Inspector for observation of fitup and welding methods prior to implementing any welds, including shop welds, on this Project.

4. In addition, Owner's Inspector will perform any additional observations deemed necessary before, during, or after fabrication to assure, to Owner's satisfaction, that proper welding is provided. Owner reserves the right to perform independent examination of welds. If Owner has any concern as a result of such examination Owner reserves the right to stop in progress welding work, without any cost to Owner, until resolution satisfactory to Owner is reached.
5. In addition, any steam or condensate weld that is unable to be tested by means of hydro-testing, shall be inspected and tested by non-destructive examination.

a. All tests shall be performed by an AWS-CWI (American Welding Society Certified Welding Inspector). The firm providing these services shall be agreed upon by the Owner and the Engineer.
b. Butt welds shall be tested by means of radiography. The criterion for pass/fail of this test will be as defined in the latest edition of the ASME B31.1 Power Piping code.
c. Socket weld connections shall be tested by means of dye penetrate or magnetic particle analysis. The criterion for pass/fail of this test will be as defined in the latest edition of the ASME B31.1 Power Piping code.
    1. The Owner reserves the right to test using non-destructive means (radiographic inspection) any weld made by the contractor.
    2. Any failure of a weld in a segment constitutes inspection of all welds in that segment at the contractor’s expense.
    3. The firm providing the testing services shall determine prior to pipe joint fit up if the area of radiography exposure is:

a. Completely inside the construction fence.
b. Beyond the construction fence and not impacting adjacent buildings.
c. Beyond the construction fence and impacting adjacent buildings.
d. If the area of radiography exposure is determined to impact areas outside of the construction fence, contact the Owner for coordination of signage, barricades and monitoring.
    1. All initial testing will be funded by the owner through the project testing funds.
    2. All repairs, and re-examination of repaired welds will be at the contractor’s expense

D. Welder Qualifications:
    1. Each welder and welding operator must qualify by passing required procedure test before performing any project welds. Submit copy of Manufacturer's Record of Welder or Welding Operator Qualification Tests (WPQS) as required by Section IX of ASME Boiler and Pressure Vessel Code for all welding procedures to be performed by welding operator.
    2. Welder qualifications must be current. If qualification test is more than 6 months old, provide record of welding continuity for each welder.
    3. Record of welding continuity is intended to show that welder has performed welding at least every 6 months since the date that welder qualification test was passed for the submitted welding procedure specification.
    4. Record of welding continuity shall include, at minimum, the following:

a. Welder's employer name and address
b. Date Welder Qualification Test was passed
c. Dates indicating welding continuity
    5. Welders shall be qualified as required by ASME B31.1 or B31.9, as applicable. In addition, there shall be an independent witness of welder tests. That witness

shall be representative of independent testing laboratory, Authorized (Code) Inspector, Owner's or Engineer's Inspector or consultant approved by National Certified Pipe Welding Bureau.

6. Welder qualifications must cover all pipe sizes and wall thickness used on this project. Test segments or coupons shall be appropriately selected for qualification. Test position shall be arranged in "6G position."

E. Weld Record:

1. For welding within the scope of ASME B31.1 Power Piping, submit to Engineer for approval an administrative procedure for recording, locating, monitoring and maintaining quality of welds to be performed on the project. This quality control document record shall include but not be limited to:

a. Drawings and schedules identifying location of each weld by individual number, identification of welder who performed each weld by individual welder's name, stamp number, date, and WPS used.

## 1.7 PIPE CERTIFICATION

A. Certification is required for all pipe within scope of ASME B31.1. Submit certification papers, as outlined below, within 30 days of delivery of pipe to project site.

B. Type E or S Pipe:

1. Furnish manufacturer's mill certificates (material test report) including dimensions, heat numbers, chemical analysis and tensile test results for pipe shipped to project site.

# PART 2 - PRODUCTS

## 2.1 CHILLED WATER

A. 2-1/2" and Smaller:

1. Pipe: ASTM B88 seamless, Type L, hard temper copper tube.
2. Fittings: ASME B16.22, wrought copper, solder joint.
3. Joint: ASTM B32, lead free solder, Bridgit, Silvabrite, Silverflow or Canfield
4. Unions: ASME B16.18 cast copper alloy or ASME B16.22 wrought copper solder joint, Class 250. No unions to be used for lines sizes 3/4" and smaller. Unions shall be used for line sizes over 1".
5. Use solder joints for valves and piping specialties in copper piping.

B. 3” through 4”:

1. Pipe: ASTM B88 seamless, Type L, hard temper copper tube.
2. Fittings: ASME B16.22, wrought copper, solder joint.
3. Joint: ASTM B32, lead free solder, Bridgit, Silvabrite, Silverflow or Canfield.
4. Flanges: 150 lb. bronze solder flanges. Flanges shall still be rated for 250 psig Working pressure (cold water) and 250 psig bubble-tight shutoff, with 150 class weld companion flanges
5. Unions: ASME B16.18 cast copper alloy or ASME B16.22 wrought copper solder joint, Class 300. No unions to be used for lines sizes 3/4" and smaller. Unions shall be used for line sizes over 1".

C. 6" and Larger:

1. Pipe: ASTM A53, Grade B, Type E or S, Schedule Standard, black steel.
2. Fittings: Standard weight steel, welded.
3. Flanges: Class 300. Refer to Unions and Flanges in this Section. Weld flanges for chilled water piping can be 150# (class) on Chilled water piping 20" and smaller. Flanges shall still be rated for 250 psig Working pressure (cold water) and 250 psig bubble-tight shutoff, with 150 class weld companion flanges

## 2.2 CONDENSER WATER

A. 2" and Smaller:
   1. Pipe: ASTM A53, Grade B, Type E or ASTM A106, Grade B, standard weight, carbon steel
   2. Fittings: ASME B16.4, Class 125, cast iron, threaded or ASME B16.3, Class 150, malleable iron, threaded
   3. Unions: ASME B16.29, malleable iron, Class 250. Refer to Unions and Flanges in this Section

B. 2-1/2" and Larger:
   1. Pipe: ASTM A53, Grade B, Type E or S, Schedule Standard, black steel
   2. Fittings: 150 lb. welded.
   3. Flanges: 150 lb. or 300 lb. flanges as required. Refer to Unions and Flanges in this Section

## 2.3 LOW PRESSURE STEAM AND CONDENSATE SYSTEM (15 PSIG THRU 150)

A. 2" and Smaller:
   1. Pipe: Schedule 40 for steam and Schedule 80 for condensate, seamless steel, black; ASTM A106, Grade B, or A53 Grade B, ERW.
   2. Joints: Threaded with seam weld, except use threaded for instruments
   3. Fittings: 300 lb malleable iron threaded with seam weld, except use threaded for instruments, 3000 psi; ASTM A105.
   4. Unions: Malleable iron, threaded, steel to steel seat, ground joint, 3000 psi; ASTM A105, ANSI B16.11.

B. 2-1/2" and Larger:
   1. Pipe: Schedule 40 for steam and Schedule 80 for condensate, seamless steel, black; ASTM A106, Grade B, or A53 Grade B, ERW.
   2. Joints: Welded without backrings.
   3. Fittings: Steel, Schedule 80, butt-welded, beveled end, long radius elbow; ASTM A234, ANSI B16.9.
   4. Flanges: Refer to Flanges in this Section

## 2.4 BOILER BLOW DOWN AND EQUIPMENT DRAIN

A. 2" and Smaller:
   1. Pipe: ASTM A106, Grade B, extra strong, carbon steel
   2. Fittings: ASTM A105 Grade II/ASME B16.11, 3000 lb forged steel, threaded
   3. Unions: Forged steel, 3000 lb, threaded. Refer to Unions and Flanges in this Section

B. 2-1/2" and Larger:
   1. Pipe: ASTM A53, Grade B, Type E or S, extra strong, carbon steel
   2. Fittings: ASTM A234 Grade WPB/ASME B16.9, extra strong, seamless, carbon steel weld
   3. Flanges: Class 300. Refer to Unions and Flanges in this Section

## 2.5 INSTRUMENT TUBING

A. Copper:
   1. Pipe: Copper tube, Type L, hard drawn, ASTM B88
   2. Fittings: Brass, compression fittings

## 2.6 VENTS AND RELIEF VALVES

A. Unless otherwise indicated, use pipe and pipe fittings as indicated for the system to which relief valve or vent is connected.

B. Use ASTM B88 Type K hard drawn copper tube, cleaned and capped in accordance with ASTM B280, and marked “ACR” with ANSI B16.22 wrought copper or forged brass solder-type fittings for refrigerant vent piping.

## 2.7 PRESSURE GAUGES AND TAPPINGS

A. Use pipe and pipe fittings as indicated for the system to which pressure gauge or tapping is connected. Use "Threadolets", "Sockolets" or tee fittings for tappings. Refer to Part 3 under General for use of "Threadolets" and "Sockolets".

B. Gauge pipe shall be 1/4" unless otherwise indicated.

C. Gauge pipe shall be 1/2" for high pressure steam (101 psig and over) systems.

## 2.8 COOLING COIL CONDENSATE DRAIN

A. All sizes:
   1. Pipe: DWV copper.
   2. Fittings: Wrought copper fittings.
   3. Joint: ASTM B32, lead free solder, Bridgit, Silvabrite, Silverflow or Canfield.

## 2.9 DIELECTRIC UNIONS, FLANGES AND FITTINGS (STEEL PIPE TO COPPER PIPE)

A. 2" and Smaller:
   1. Use bronze ball valves specified in Section 23 2118 for dielectric purpose.
   2. Dielectric fittings similar to Victaulic Style 647 or Clearflow Dielectric Waterway fittings may be used in lieu of dielectric unions for pipe sizes 2" and smaller.
      a. Clearflow fittings shall be ASTM A53 electro zinc-plated steel pipe with high temperature polyolefin polymer liner, suitable for continuous use at temperatures up to 230°F and pressures up to 300 psig.
   3. ASTM A197/ASME B16, equal to Stockham Figure 693-1/2, Watts Series 3000 or Wilkins (Zurn) Model DU series dielectric unions with EPDM dielectric gasket, 250 psi at 180°F.

B. 2-1/2” through 4”:
   1. Watts dielectric flange fittings Series LF 3100/LF 3110 with dielectric gasket, 175 psi at 180°F.
   2. Dielectric fittings similar to Victaulic Style 647 or Clearflow Dielectric Waterway fittings may be used in lieu of dielectric unions for pipe sizes 2-1/2” and larger.
      a. Clearflow fittings shall be ASTM A53 electro zinc-plated steel pipe with high temperature polyolefin polymer liner, suitable for continuous use at temperatures up to 230°F and pressures up to 300 psig.

## 2.10 DIELECTRIC UNIONS, FLANGES AND FITTINGS (STEEL TO STEEL PIPE)

A. 1" and Smaller: Similar to Epco model HA-B with dielectric gasket, 250 psi at 210°F

B. 1-1/2" and Larger: Similar to Epco model W with bolt insulators, dielectric gasket, bolts and nuts, 175 psi at 210°F). Pikotek model VSC dielectric gasket with viton sealing element, G-10 sleeve and double washers, suitable to 350°F, may be used with specified flanges.

## 2.11 UNIONS AND FLANGES

A. Unions:

1. 2" and Smaller: Malleable iron, ASME B16.39 with ground joint, bronze or brass to iron. Provide black malleable iron for carbon steel piping and galvanized malleable iron for galvanized steel piping. Unless otherwise specified, pressure class and joint type of union shall be equal to that specified for fittings of respective piping service. Minimum pressure class of unions shall be Class 250.
2. 2" and Smaller: Forged steel, ASTM A105 Grade 2, ASME B16.11, 300 lb WOG with steel to steel seats. Joint type shall match that specified for fittings of respective piping service.

B. Flanges:

1. 2-1/2” and Larger: ASTM A105, ASME B16.5, hot forged steel, welding neck pattern. Slip-on pattern are not allowed. Bore dimension of welding neck flange shall match inside diameter of connected pipe.
2. Use raised face flanges for mating with other raised face flanges with self-centering flat ring gaskets. Use flat face flanges for mating with other flat face flanges with full face gaskets.
3. Flange pressure class indicated in respective piping service is minimum required. Mating flange pressure class shall match pressure class of connected device, such as valves and piping specialties.

C. Flange Gaskets:

1. General - Gasket material shall be asbestos free and suitable for pressures, temperatures and fluid of respective piping system. Non-metallic gaskets shall be in accordance with ASME B16.21 and ASTM F104.
2. Service Temperature (through 249°F) – Garlock, Klingersil or J.M. Clipper, similar to Garlock 5500. Gaskets similar to Garlock Style 3000 may be used for hydronic piping. Unless otherwise indicated or recommended by manufacturer, gaskets shall be compressed inorganic fiber with nitrile binder 1/16" thick for flanges 12" and smaller and 1/8” thick for flanges 14” and larger.
3. Service Temperature (250°F thru 800°F) - Flexitallic, Garlock, Lamos equal to Flexitallic Style CG, flexible graphite filler, 304 SS winding, carbon steel centering ring, 0.175" thickness.
4. Service Temperature (801°F thru 1500°F) - Flexitallic, Garlock, Lamos equal to Flexitallic Style CG, flexible graphite filler, 316 SS winding, carbon steel centering ring, 0.175" thickness.
5. Service Temperature (1501°F thru 1700°F) - Flexitallic, Garlock, Lamos equal to Flexitallic Style CG, flexible graphite filler, Inconel 600 winding, 316 SS centering ring, 0.175" thickness.

D. Bolting:

1. Bolts, bolt studs, nuts and washers shall have zinc plated finish.

2. Thread shall be in accordance with ASME B1.1, Class 2A tolerance for external threads and Class 2B tolerance for internal threads. Threads shall be coarse-thread series except that alloy steel bolting 1/8" and larger in diameter shall be 8 pitch thread series.
3. Threaded rods are not allowed as fastening elements.
4. For Class 150 and Class 300 flanges not exceeding 400°F temperature, use carbon steel bolts or stud bolts conforming to ASTM A307, Grade B with nuts conforming to ASTM A194.

a. Bolts conforming to ASTM A307, Grade A may be used for piping governed by ASME B31.9.

5. For Class 400 and 600 flanges at 750°F or lower temperature, use alloy steel bolts or stud bolts conforming to ASTM A193, Grade B7 or B16, with nuts conforming to ASTM A194, Grade 2H.
6. For Class 300 flanges above 400ºF design temperature (HPS, CPD, HPC), use alloy steel bolts or stud bolts conforming to ASTM A193, Grade B7 or B16, with nuts conforming to ASTM A194, Grade 2H.

## 2.12 THREADED JOINT SEALANTS

A. Paste type for brush application or cord type. Products shall be non-toxic, chemically inert, non-hardening, rated for -50°F to 400°F and up to 10,000 psi (liquids) and 3000 psi (gases), certified by UL, CSA, and NSF.

B. Use sealant similar to Loctite Model 54531 for piping handling oil or petroleum products.

## 2.13 WELD BRANCH OUTLET FITTINGS (WELDOLETS, THREADOLETS AND SOCKOLETS)

A. Weld branch outlet fittings shall conform to MSS-SP-97, ASME B16.9 for weldolets, ASME B1.20.1 for threadolets and ASME B16.11 for sockolets.

B. Materials shall match material of header piping and wall thickness of outlet or branch end shall match wall thickness of branch pipe.

# PART 3 - EXECUTION

## 3.1 GENERAL

A. Remove foreign materials before erection. Ream ends of piping to remove burrs.

B. Install piping parallel to building walls and ceilings and at such heights so as not to obstruct any portion of window, doorway, stairway, or passageway. Install piping to allow adequate service space for equipment. Refer to drawings and/or manufacturer's recommendations. Install vertical piping plumb. Where interferences develop in field, offset or reroute piping as required to clear such interferences. In all cases, consult drawings for exact location of pipe spaces, ceiling heights, door and window openings or other architectural details before installing piping.

C. Piping shall be full weight and of sizes shown on the drawings. Ends of piping shall be reamed, and where applicable, all threads shall be sharp and true.

D. Provide anchors, expansion joints, swing joints and expansion loops so that piping may expand and contract without damage to itself, equipment or building.

E. Mitered elbows, welded branch connections, notched tees and "orange peel" reducers are not allowed. Unless specifically indicated, reducing flanges and reducing bushings are not allowed. Reducing bushings may be used for air vents and instrumentation connections.

F. Unless otherwise indicated, use fittings as specified in Part 2 of this Section for elbows, tees, reducers, etc.

G. "Weldolets" with outlet size 2-1/2” and larger and "Threadolets" or "Sockolets" with outlet size 2" and smaller may be used for branch connections up to one pipe size smaller than main. Use "Threadolets" where threaded fittings are specified and use "Sockolets" where socket weld fittings are specified. Install in accordance with PFI (Pipe Fabrication Institute) Standard ES49.

H. Install drains throughout systems to permit complete drainage of entire system.

I. Do not install piping over electrical panelboards, switchgear, switchboards or motor control centers.

J. Install valves, control valves and piping specialties, including items furnished by others, as specified and/or detailed.

K. Make connections to all equipment installed by others where that equipment requires piping services indicated in this Section.

L. For piping within the scope of ASME B31.1 Power Piping, transfer piping material specification and "Heat Number" to each segment of pipe prior to cutting.

## 3.2 THREADED PIPE JOINTS

A. Threads of pipe and fittings shall conform to ASME B1.20.1.

B. Ream pipe ends after cutting and clean before erection. Apply thread sealants to cleaned male threads. Assemble joint to appropriate depth and remove any excess pipe joint compound from tightened joint.

## 3.3 FLANGED JOINTS

A. Clean flange surfaces and align them parallel. Bolt holes of gaskets shall be cut slightly larger than bolt diameter. Gasket ID shall be slightly larger than flange ID.

B. Position gasket concentrically so compression is equally distributed over entire gasket surface.

C. Lubricate bolts and run nuts down by hand.

D. By using torque wrench, tighten nuts in the proper sequence so gasket is compressed evenly, and to the appropriate torque specified by bolt manufacturer.

E. Re-torque bolts 12 to 24 h after start up.

## 3.4 WELDED PIPE JOINTS

A. Inspect pipe and pipe fittings for roundness before they are fit-up or set in place.

B. Properly clean and prepare pipe base material before fit-up. Verify joint land and bevel.

C. Preheat pipe base material as required by welding procedure specification. Temperature of pipe material must be minimum of 32°F before welding.

D. Properly align and adjust joint as required by welding procedure and thickness of material. Verify tolerances after tacking sequence.

E. Use weld material diameter as procedurally required for type and thickness of work being done.

F. Use sufficient argon pre-purge and argon post-purge for GTAW processes. Post purge should be until weld is no longer glowing plus 5 seconds. Maintain purge for at least 2 layers of weld material.

G. Properly store welding materials.

H. Clean tacks before welding out. Remove slag after each pass by grinding to avoid slag inclusion.

I. Weld reinforcement shall not exceed limits established in Chapter V of ASME B31.1.

J. Brush each weld free of rust and paint with rust resistant product that matches piping surface color.

K. For piping within scope of ASME B31.1, each weld shall be permanently marked by welder performing weld. Each welder shall sign and date field welding log record for all welds performed by welder as indicated in Part 1.

L. Conduct radiographic test for sections or joints that cannot be tested by hydrostatic test methods (such as joints cut into existing piping systems) by qualified radiographic testing firm.

## 3.5 COPPER PIPE JOINTS

A. Cutting of tubing shall not make tubing out of round. Ream cut tube ends to full inside diameter.

B. Remove slivers and burrs remaining from tube cut by reaming and filing both pipe surfaces. Clean fitting and tube with emery or sand cloth. Remove residue from cleaning operation, apply flux and assemble joint. Use solder or brazing to secure joint as specified for specific piping service.

## 3.6 STEAM AND STEAM CONDENSATE

A. Pitch steam mains down at 1" per 40 ft in direction of flow. Pitch runouts to terminal equipment and control valves at 1/2" per 1 ft for proper condensate drainage. Install drip traps at each rise and at horizontal termination of each steam main.

B. Pitch steam condensate lines down at 1" per 20 ft in direction of flow.

C. Unless otherwise indicated, use eccentric fittings for changes in horizontal pipe sizes with fittings installed for proper condensate drainage (bottom of pipe straight). Concentric fittings may be used for changes in vertical pipe sizes.

D. For steam branch connections and runouts, use top or top 45° connection to main.

E. For condensate branch connections to condensate mains, use top or top 45° connection to main.

F. For condensate connections from steam mains, use bottom connection to main.

G. Install minimum of 3 elbows in each pipe runout to terminal equipment to provide flexibility for expansion and contraction of piping system.

H. Any location on a steam line that holds water shall have a properly installed dirt leg and steam trap.

## 3.7 WATER SYSTEMS

A. Unless otherwise indicated, install horizontal piping level. Install manual air vents at all high points where air may collect. If vent is not in accessible location, extend air vent piping to nearest code acceptable drain location with vent valve located at nearest accessible location to pipe.

B. Main branches and runouts to terminal equipment may be made at top, top 45°, side or bottom 45° of main provided that there are drain valves suitably located for complete system drainage and manual air vents are located as described above.

C. Unless otherwise indicated, use top or top 45° connection to main for upfeed risers, and use side or bottom 45° connection to main for downfeed risers. Bottom connection is not allowed.

D. Use minimum of 3 elbows in each pipeline to terminal equipment to provide flexibility for expansion and contraction of piping systems. Offset pipe connections at equipment to allow for service, such as removal of terminal device.

E. Unless otherwise indicated, use concentric fittings for changes in pipe sizes and for valves smaller than pipe sizes.

F. Notch and dimple branch tubes. Braze joints. Apply heat properly so that pipe and tee do not distort. Remove distorted connections.

G. Where mechanically formed tee fittings are allowed, form mechanically extracted collars in continuous operation, consisting of drilling pilot hole and drawing out tube surface to form collar having height of not less than 3 times thickness of tube wall. Collaring device to be adjustable.

## 3.8 VENTS AND RELIEF VALVES

A. Install vent and relief valve discharge lines as indicated on drawings, as detailed, and as specified for each specific valve or piping specialty item.

## 3.9 INSTRUMENT AIR PIPING

A. Install exposed piping and conduit parallel to or at right angles to building structure and support adequately at uniform intervals. Use only tool made bends.

B. Make tests on sectional piping during progress of installation to ensure no leakage.

C. Test entire piping system by placing it under 100 psi pressure for 24 hours. Trend log pressure during test and submit test results with operating and maintenance submittal. Pressure drop during this period shall not exceed 3 psi.

D. Piping type shall be as follows:
   1. Exposed or Exterior:
      a. Use hard copper tubing.
      b. Use lengths of soft copper tubing formed in minimum 6-inch diameter 360 degree loops for vibration and expansion at connections to instruments, devices, and actuators.
   2. Where specifically indicated on the design documents:
      a. Use Stainless Steel Tubing

## 3.10 DIELECTRIC UNIONS AND FITTINGS

A. Install dielectric unions, flanges or fittings in main and branch piping of water systems at each point where copper to steel pipe connection occurs. Dielectric unions or fittings shall not be used at terminal device connections.

B. Concealed dielectric unions and fittings are not allowed.

C. Install steel to steel pipe dielectric unions or flanges in chilled water, steam and steam condensate piping at each point where interior steel piping is connected to exterior underground steel piping.

## 3.11 UNIONS AND FLANGES

A. Install union or flange at each automatic control valve and at each piping specialty or piece of equipment that requires tube pull or removal for maintenance, repair or replacement. If required, provide additional unions or flanges in order to facilitate removal of piping sections that interfere with tube pulls or equipment removal. Where valve is located at piece of equipment, provide flange or union connection on equipment side of valve.

B. Concealed unions or flanges are not allowed.

## 3.12 PIPING SYSTEM PRESSURE TESTS

A. Owner and/or Owner's representative may elect to witness pressure test. Notify Owner and/or Owner's representative at least 3 days in advance.

B. Conduct pressure test prior to flushing and cleaning of piping systems.

C. Conduct hydrostatic (HYDRO) test in accordance with ASME B31.1 137.4. Test pressure shall be in accordance with ASME B31.1, but shall not be lower than the minimum test pressure listed below.

D. If leaks are found, repair with new materials and repeat test until leaks are eliminated. Caulking will not be acceptable.

E. Pressure tests may be made of isolated portions of piping systems to facilitate general progress of installation. Any revisions made in piping systems require retesting of affected portions of piping systems.

F. No systems shall be insulated until it has been successfully tested. If required for additional pressure load under test, provide temporary restraints at expansion joints or isolate them during test. Unless otherwise noted, minimum test time shall be 4 h plus such additional time as may be necessary to conduct examination for leakage.

G. No pressure drop shall occur during test period. Any pressure drop during test period indicates leakage.

H. Provide pumps, gauges, instruments, test equipment, temporary piping and personnel required for tests and provide removal of test equipment and draining of pipes after tests have been made.

I. For hydrostatic tests, remove air from piping being tested by means of air vents. Measure and record test pressure at high point in system. Where test pressure at high point in system causes excessive pressure at low point in system due to static head, portions of piping system may be isolated and tested separately to avoid undue pressure. However, every portion of piping system must be tested at the specified minimum test pressure.

J. Conduct pressure tests with parameters indicated below:

| System | Minimum Test Pressure | Remarks |
|---|---|---|
| Steam and condensate | 450 psig | HYDRO |
| Heating hot water | 100 psig | HYDRO |
| Chilled water | 250 psig | HYDRO |
| Condenser water | 175 psig | HYDRO |
| Low pressure steam, condensate and blowdown piping | 225 psig | HYDRO |
| Domestic cold water and softened water | 100 psig | HYDRO |

K. Contractor shall provide all pumps, gauges, instruments; test equipment, flow meters, temporary piping and personnel required for tests and provide removal of test equipment and draining of pipes after tests have been made.

L. If piping system is drained after testing and left empty or untreated for more than 3 days, add Nalco 2572 at recommended dosages for dry system lay-up.

**3.13 FLUSHING AND CLEANING PIPING SYSTEMS**

A. Notify Owner and/or Owner's representative at least 7 days in advance.

B. Flush new water, fluid, steam and condensate systems thoroughly for 15 minutes or longer, as required to ensure removal of dirt and foreign matter from piping system. Bypass pumps and equipment and remove strainers from strainer bodies. Provide circulation by Contractor-supplied portable pumping apparatus.

C. Provide temporary piping or hose to bypass coils, control valves, heat exchangers, other factory-cleaned equipment, and any component that may be damaged.

D. Sectionalize system to obtain minimum velocity of 6 fps. Provide temporary piping to connect dead-end supply and return headers as necessary. Flush bottoms of risers.

E. For pipes 18" and larger, maintain velocity as close as 6 fps possible, but not below 5 fps.

F. After initial flushing of system, use portable pumping apparatus to circulate cold water detergent for water systems. Refer to Section 23 2514 - Chemical Treatment Systems for pipe cleaning.

G. After initial flushing of system, use portable pumping apparatus for continuous 24 h minimum circulation of cold water detergent similar to Nalco 2567 cleaner. Flush detergent clear with continuous draining and raw water fill for additional 12 h or until all cleaner is removed from system. Replace strainers and reconnect permanent pumping apparatus and all apparatus bypassed.

H. Refer to Section 23 2514 - Chemical Treatment Systems for water analysis.

I. Use oil when flushing hydraulic piping.

J. Flush gas piping with clean, dry compressed air for one (1) h minimum. Open and clean drip legs. Repeat flushing until no debris is found in drip legs.

K. Steam Systems:

1. All steam piping in the distribution system shall be cleaned prior to its connection to the University's district heating system.

a. The steam and condensate piping shall be cleaned by means of steam blow only.

2. The contractor shall coordinate with UK Physical Plant to conduct steam blow.
3. All in-line instruments and devices shall be removed prior to the flushing and steam blowing, and replaced with spool pieces if necessary. After the completion of the cleaning, the Contractor shall reinstall all instruments.
4. All permanent piping shall have passed its hydrostatic test and be flushed with water to remove loose debris prior to any steam blow.
5. All steam and condensate lines shall be blown three separate times with cool down periods between each blow to cause thermal cycling of the piping. This is to facilitate the release of welding slag and other bonded debris.
6. During the final blow for each pipe, the process shall generate not less than 250 feet per second of steam flow velocity in all sections of the permanent piping, and maintain this velocity for period not less than one hour. The blow shall continue until the piping is deemed clean enough to connect to the University's district heating system by the designated UK Physical Plant representative.
7. The steam blow shall be witnessed by mechanical design engineer of record, or their designated representatives.
8. The steam blow shall not be conducted when the ambient air temperature is less than 50 degrees F. Any such event shall be scheduled with UK Physical Plant personnel. The scheduling of such events will be dependent on campus load, and steam availability, and outages required. UK Physical Plant has final authority on the scheduling of all such events.
9. The steam blow shall minimize stress to the system components cause by excessive temperature and/or pressure changes.
10. The arrangement of the temporary piping shall be designed in accordance with ASME B31.1. The piping arrangement and steam blow shall not cause the stress levels in any permanent or temporary piping component to exceed the allowable levels listed in ASME B31.1.
11. 1Any low points created as a result of the temporary piping arrangement shall have manual drains installed for proper drainage during the blow. If the drains are installed in permanent piping they shall be installed in accordance with the piping standards for this project. If they are temporary to be removed after the steam blow, they may be of suitable temporary construction, such as threaded brass or bronze valves.
12. The exhaust end of the line(s) being blow shall be muffled and/or quenched as required to maintain 85 dBA or less at a distance of 50 feet from the steam discharge point. In all cases the blow(s) shall adhere to the Town of Lexington and University noise ordinance.
13. Steam discharge shall not produce shock waves or air born particulate which could settle on parked cars, people, buildings, etc. This includes small material which may soil clothing, buildings, cars, etc.
14. Modifications to any permanent fixtures or systems to accommodate the steam blow shall be repaired and or replaced at the completion of the event to the satisfaction of the University and the designer of record.
15. The contractor shall provide barricades, warning tapes, and signage as necessary to secure the immediate area during the steam blow.

16. The Contractor shall provide all necessary temporary piping, valves, mufflers, etc. needed to accomplish the steam blow(s) safely and within the guidelines of this specification.

## 3.14 FLUSHING AND CLEANING CHILLED WATER PIPING SYSTEM

A. Contractor shall visually inspect internal portion of each length of pipe during installation. Remove all dirt and foreign matter prior to installing additional lengths. After each major section of piping has been installed, it shall be cleaned and flushed utilizing a high pressure water “hydro-jet” process. The hydro-jet process involves passing a high pressure, high volume spray type cleaning head through the piping. The head is inserted in each section of piping and activated with full water pressure and flow. Through hydraulic force from directional spray nozzles the head propels itself forward up the pipe section. Once the head reaches the end of the pipe section it is retracted while maintaining maximum water pressure and flow. The length of the piping section shall be determined ahead of time so that the proper amount of travel can be tracked with calibrated markings on the spray head feed water hose or a meter on the hose reel. While traveling through the piping the pressurized water spray knocks debris loose and carries it back to the open end of the piping where it is collected and removed from the system. For each section of piping the process shall be performed a minimum of two times and shall be repeated until the water exiting the end of the pipe is clear and free of debris as determined by the Owner/Engineer.

B. The hydro-jet equipment utilized shall be capable of providing a minimum of 50 gpm at 2000 psi.

C. All cleaning and flushing shall be performed such that all debris will be pulled or flushed downhill.

D. All cleaning and flushing shall be initiated from all low points in the system and shall terminate at the nearest adjacent high point in the system.

E. Coordinate the limitations and requirements of hydro-jet process with the flushing subcontractor such that the piping is installed in a sequence and manner that allows every section of the new pipeline to be cleaned and flushed. Limitations may include maximum length of the pipe section, maximum number and/or degree of bends in the pipe section, maximum slope of the pipe section, equipment and excavation access requirements, and the minimum size of the openings required in the piping to allow for insertion and retraction of the cleaning head.

F. Contractor shall provide access at all low points through valves, tees, flanges, etc. to facilitate the cleaning and flushing process. If temporary fittings or piping is required, it shall be provided by the Contractor and removed by the Contractor after successful cleaning.

G. After flushing and cleaning is completed, Contractor shall provide necessary pipe and fittings required to complete the piping system. Each cleaned section of piping shall be capped and protected to keep mud, debris, water, etc. from entering the piping. If a piping section is left open or unprotected, or is found to be contaminated, it shall be re-cleaned prior to being filled and activated at no cost to the Owner.

H. Contractor shall provide all water for flushing and testing. Coordinated rental of fire hydrant meters with local Fire Department(s), or the University as required.

I. Contractor shall provide all temporary piping from water source to piping system and shall provide means for conducting cleaning water from underground piping system to the appropriate sewer; i.e. pumps, piping, hoses, tanks, etc. Contractor to remove all temporary piping, pumps, hoses, etc. from site immediately after flushing has been completed.

J. Any section of piping which is unable to be flushed and cleaned by “hydro-jet” procedures shall be cleaned by hand to remove oils, dirt and debris. Hand cleaning procedures do not remove weld

slag, and as such, any piping that cannot be flushed and cleaned by “hydro-jet” procedures shall have root pass of welds performed by GTWA process to eliminate the production of slag.

## 3.15 PIPE PAINTING

A. Exposed exterior carbon steel, black iron or other ferrous pipe and fittings shall be prepared and painted by qualified painters using corrosion inhibitive paints. Pipe shall be prepared in accordance with paint manufacturer's instructions and primed (2 coats) and finish painted (2 coats). Paint type shall be approved by Architect/Engineer.

B. Protect piping from weather and paint promptly to prevent corrosion.

**END OF SECTION**

# SECTION 23 2118 VALVES

## PART 1 - GENERAL

### 1.1 RELATED WORK

A. Section 20 0700 - Mechanical Systems Insulation

B. Section 23 0901A - Control Systems

C. Section 23 2120 - Piping Specialties

### 1.2 REFERENCE

A. Work under this Section is subject to requirements of Contract Documents including General Conditions, Supplementary Conditions, and sections under Division 01 General Requirements.

### 1.3 SUBMITTALS

A. Shop Drawings for each system for all sizes including, but not limited to, the following:
   1. Name of system
   2. Manufacturer's name
   3. Type
   4. Model number
   5. Materials of construction
   6. Temperature/pressure ratings
   7. Manufacturer's data sheets clearly cross-referenced
   8. All other appropriate data

## PART 2 - PRODUCTS

### 2.1 MANUFACTURERS

A. Gate valves, globe valves, check valves, and drain valves: Crane, Nibco, Stockham, Powell, Milwaukee, Hammond, or Grinnell equal to manufacturer's Figure number listed. Provide valves of same make for these services.

B. Other valves: acceptable manufacturers and Figure Number listed under each item.

### 2.2 WATER SYSTEM VALVES

A. General:
   1. Valves 2" and smaller in steel piping shall have threaded ends.
   2. Valves 2" and smaller in copper piping shall have solder ends.
   3. Provide valve stem extensions with sufficient length to allow for insulation where insulation is specified.
   4. All chilled water valves to be rated for 250 psig WOG working pressure.

B. Ball Valves:

1. 2" and Smaller: ASTM B584 bronze body, chrome plated brass/bronze or stainless steel ball, full port for 3/4" and smaller and conventional port for 1" and larger, Teflon seat rings, blowout-proof stem, 2-piece construction, 600 psi WOG, 150 psi SWP, Nibco Fig. T(S)-580-70, Apollo No. 70, Watts, Milwaukee BA-150, Hammond, Kitz or Anvil

C. Spring Loaded Check Valves:
   1. 2" and Smaller: bronze or iron body, Class 125 (250 psi WOG), Nibco Figure T(S)-480-Y, Mueller Figure 303-BP or Metraflex No. BSN.
   2. 2-1/2" and Larger: cast iron or ductile iron body, flanged or wafer type, 302/304 or 316 stainless steel spring, aluminum bronze, carbon steel or ductile iron totally encapsulated in EPDM disc, Buna-N or electroless nickel plated seat, Class 250/300 (400 psi WOG), Nibco Figure F-960 or W-960, Milwaukee 1800 or 1400, Metraflex No. 700, Mueller Sure Check Model No. 74, or Crane Duo-check II
   3. For valves 8" and larger, provide lifting lugs or threaded holes for lifting eye bolts.

D. Shut-Off Valves:
   1. 2" and Smaller: ball valves as specified in this Section
   2. 2-1/2" and Larger: butterfly valves as specified in this Section

E. Balancing Valves:
   1. 2" and Smaller: calibrated balancing valves:
      a. Variable orifice with multiple turn valve type as manufactured by Armstrong Series CBV or ABV, Tour & Andersson (Victaulic) Series 786 or 787, NIBCO 1709 or 1710, or fixed orifice with ball valve type as manufactured by Flow Design Inc. (FDI), Preso, Gerand, Nexus, HCi or Taco. Bronze or brass body, 250 psi maximum working pressure, 250°F maximum operating temperature. Furnish valve with adjustable memory stop and quick disconnect taps with built-in check valve for pressure differential measurement, integral valve setting index and memory locking device.
      b. Valves shall measure down to 0.3 gpm with accuracy of ±5%.
      c. Valves shall be leak-tight at full rated working pressure.
      d. Unless otherwise indicated, size balancing valves so that at design flow rate, pressure drop across balancing valve with valve approximately 50% open will be at minimum 25% of reading range of meter used for balancing.
   2. 2-1/2" and Larger: Armstrong Series CBV or Tour and Anderson (Victaulic) Series 788/789, ductile iron body, ASME/ANSI B16.42 Class 250/300 flange, 250 psi maximum working pressure, 250°F maximum operating temperature. Fixed orifice with ball valve or butterfly valve as manufactured by FDI, Presco or Gerand, Class 150 flange, 225 psi maximum working pressure, 250°F maximum operating temperature will be acceptable up to 4" size. Butterfly valves, as specified in this Section, together with averaging Pitot tube flow sensors, as specified in Section 23 2120 - Piping Specialties, under Flow Sensors and Meters between check valve and butterfly valve may be used when sizes for Armstrong or T/A valves are not available. Furnish butterfly valves with adjustable memory stops to limit return of valves to preset open position after shut-off.
   3. Furnish portable meter kit within durable case similar to Gerand Model "R". Furnish meter with minimum 4-1/2" diameter aluminum or brass body/brass internals with reading range of either 0" to 50" or 0" to 100" water column differential as appropriate, 200°F maximum temperature, 300 psi working pressure. Meter accuracy shall be ± 2% full scale. Provide in kit: equalizing valves, 10 ft purge hose and size devices specified. Meter shall become property of Owner.
   4. Contractor shall furnish meter for calibration and shall retain meter after final calibration.

F. Butterfly Valves:
   1. 2-1/2" and Larger:
      a. Manufacturers: DeZurik, Keystone, Nibco, Milwaukee, or Bray
      b. Ductile iron body, stainless steel shaft, aluminum-bronze disc, or Nylon 11 coated ductile iron disc, upper thrust bearing, EPDM resilient seat, rated at 200 psi bidirectional shut-off pressure , suitable for continuous operation at temperature up to 225°F, compatible to ANSI B16.1 Class 250/300 flange standards, conforming to MSS-SP-67.
         1). Weld flanges for chilled water butterfly valves can be 150# (class) on Chilled water piping 20” and smaller. Flanges shall still be rated for 250 psig Working pressure (cold water) and 250 psig bubble-tight shutoff, with 150 class weld companion flanges.
      c. Dead end pressure rating shall be 150 psi with no downstream flange/piping attached.
      d. For valves 6" and smaller, provide 10-position lever actuators with locking devices. For valves 8" and larger, provide rotary hand wheel operators with adjustable position stop and position indicators. Size hand wheel operators with no higher than 40 lb rim pull at full valve pressure rating.
      e. External disc-to-stem connections using screws or pins are not allowed.
      f. Valve necks shall be of sufficient length to allow for insulation where insulation is specified. Wheel shaft shall be sufficient length so wheel does not touch insulation.
      g. Provide full lug type valves permitting removal of down stream piping while using valve for system shut-off.
      h. Furnish valves used for balancing with adjustable memory stops.

G. Butterfly Valves (High Performance):
   1. Manufacturers: DeZurik Type BHP, Xomox, Jamesbury, Bray Series 40, or Posi-Seal
   2. Carbon steel or stainless steel body, ANSI Class 250/300 design rated for 275 psi at 100°F, bidirectional bubble-tight shut off at 275 psi, threaded lug type, upper and lower body bearings with thrust bearings, one piece single or double offset shaft of 316 stainless steel and centerless ground and polished to minimize bearing and packing wear, PTFE seats, PTFE adjustable V-ring packing, capable of service in temperature ranges of -100 to 300°F, 316 stainless steel discs and totally enclosed, factory lubed, handwheel rotary actuator with external disc position indication.
   3. Dead end pressure rating shall be 275 psi without downstream flanging.

H. Water Pressure Regulating Valves:
   1. Manufacturers: Thrush, Watts, Cash-Acme, Taco, or B & G
   2. Brass or bronze body, spring and diaphragm operated, pressure adjustable with check valve and inlet strainer and designed for maximum working pressure of 125 psig and maximum operating temperature of 160°F.

I. Lockshield Valves:
   1. Ball valves as specified above with locking handles for padlocking in open or closed position.

J. Drain Valves:
   1. Ball valve as specified above with threaded hose adapter and cap. Provide 3/4" minimum drain valve for piping larger than 1/2", except strainer blowdown valves shall be blowdown connection size. Provide 1/2" drain valve for 1/2" piping. If 3-piece ball valves are specified, use 2-piece ball valves with same construction.

K. Pressure Compensating Flow Control Valves:

1. All metal construction, factory set to automatically maintain flow rate within plus/minus 5% accuracy over operating pressure differential range of at least 14 times minimum required for control, self-contained spring loaded perforated cartridge control mechanism, passivated stainless steel internal working parts, rated for 200 psi pressure at 250°F.
2. Valves 2" and under to have threaded ends with ground joint union; 2-1/2"and larger to have flanged ends.
3. Each automatic flow control valve to have pressure tappings with quick disconnect fittings suitable for use with portable measuring instrument specified, to verify pressure differential across flow control orifice.
4. Certified performance data based on independent laboratory tests to be available.
5. Manufacturers: Griswold, Autoflow or Dole
6. Furnish to Owner portable pressure-temperature measuring kit consisting of 2 pressure gauges with 4-1/2" dial, air bleed device, hoses, quick-connect fittings, protected thermometer, instructions and carrying case. Kit to be used to read pressure drop across flow control orifice and temperature at that point.

## 2.3 DOMESTIC COLD WATER SYSTEM VALVES

A. General:
   1. Valves 2" and smaller in steel piping shall have threaded ends.
   2. Valves 2" and smaller in copper piping shall have solder ends.
   3. Provide valve stem extensions with sufficient length to allow for insulation where insulation is specified.

B. Ball Valves:
   1. 2" and Smaller: ASTM B584 bronze body, stainless steel ball, full port, Teflon seat rings, blowout-proof stem, 2-piece construction, 600 psi WOG, 150 psi SWP, Apollo No. 70, Watts, Milwaukee BA-150, Hammond, Kitz or Anvil

C. Spring Loaded Check Valves:
   1. 2" and Smaller: bronze or iron body, Class 125, Nibco Figure T(S)-480, Mueller Figure 303-AP or Metraflex No. 700
   2. 2-1/2" and Larger: cast iron or ductile iron body, flanged or wafer type, 302/304 or 316 stainless steel spring, aluminum bronze, carbon steel or ductile iron totally encapsulated in EPDM disc, Buna-N or electroless nickel plated seat, Class 125, Nibco Figure F-910 or W-910, Milwaukee 1800 or 1400, Metraflex No. 700, Stockham Figure WG-970, Mueller Sure Check Model No. 71, or Crane Duo-check II
   3. For valves 8” and larger, provide lifting lugs or threaded holes for lifting eye bolts.

D. Globe Valves: Class 150, bronze, soldered ends, union bonnet, renewable seat and disc. Powell 1823.

E. Shut-Off Valves:
   1. 2" and Smaller: ball valves as specified in this Section

F. 2-1/2" and Larger: butterfly valves as specified in this Section

## 2.4 LOW PRESSURE STEAM AND CONDENSATE SYSTEM VALVES (15 PSIG AND LOWER)

A. Gate Valves:
   1. 1-1/2" and Smaller: ANSI Class 800, forged steel body, constructed of ASTM A105, Grade 2 forged carbon steel with socket welded connections. Valves shall be integral or seal welded

outside screw and yoke design. Seat and wedges shall meet ASTM A-182-F6 chromium stainless steel. Seat rings shall be hard faced. Valves shall conform to ANSI B16-34 pressure-temperature rating. Valves shall be as manufactured by Vogt, Velan, or Powell.

a. For steam condensate system, ball valves may be used.

1). Class 1500, socket welded, 316 stainless steel ball and stem, full port, Teflon seat rings, blowout-proof stem, three-piece construction, Valves shall be as manufactured by Apollo, Watts, Milwaukee or Hammond.

2. Above specified ball valve is rated for 150 psig saturated steam and 350 °F. Ball valve option to be included unless Owner requires no ball valves to be used.

3. 2-1/2" and Larger: ASTM A216, WCB, steel body, OS&Y, stainless steel or 13% chromium hard faced wedge and seat ring, butt welded, bolted bonnet, Class 150, conforming to ASME B16.5, B16.10 and B16.34, Valve shall be as manufactured by Velan, Powell, Crane, or Williams.

4. Provide warm-up bypass around all shutoff valves 4" and larger. Warm-up bypass shall be provided within field piping for horizontal valve installations. Valves installed in vertical shall have integral drain tap.

B. Globe Valves:

1. 2" and Smaller: 800 psi socket welded body, forged steel OS&Y hard forced seat, stainless trim, bolted bonnet. Valves shall be as manufactured by Vogt, Velan, or Powell.

2. 2-1/2" and Larger: ASTM A216, WCB, steel body, stainless steel disc and seat rings, butt welded, bolted bonnet, Class 150, conforming to ASME B16.5, B16.10 and B16.34, Valve shall be as manufactured by Velan, Powell, Crane, or Williams.

C. Shut-Off Valves:

1. Use gate valves as specified above.

D. Drain Valves:

1. Threaded ball valve as specified above with hose thread adapter. Provide 3/4" minimum drain valve size except strainer blowdown valves to be blowdown connection size.

## 2.5 HIGH PRESSURE STEAM & CONDENSATE SYSTEM VALVES

A. Gate Valves:

1. 2" and Smaller: ASTM B61, bronze body, threaded, rising stem, solid bronze wedge, union bonnet, stainless steel seat rings, malleable iron handwheel, Class 300 (300 psi WP steam), conforming to MSS SP-80, Powell Fig. No. 2377

2. 2-1/2" and Larger: ASTM A216, WCB, steel body, OS&Y, stainless steel or 13% chromium hard faced wedge and seat ring, flanged, bolted bonnet, Class 300, (300 psi WP at 500 degrees F) conforming to ASME B16.5, B16.10 and B16.34, Stockham Figure 30-OF, Powell Fig. 3003N, Crane 33, Milwaukee 3050, Velan Fig. 1064C, or Williams 30F

B. Globe Valves:

1. 2" and Smaller: ASTM B61, bronze body, threaded, union bonnet, stainless steel plug disc and seat rings, malleable iron handwheel, Class 300 (300 psi WP steam), conforming to MSS SP-80, Powell Fig. No. 2612

2. 2-1/2" and Larger: ASTM A216, WCB, steel body, stainless steel disc and seat rings, flanged, bolted bonnet, Class 300, (300 psi WP steam at 500 degrees F), conforming to ASME B16.5, B16.10 and B16.34, Stockham Fig. 30-GSF, Powell Fig. 3031, Crane, Milwaukee 3060, Velan Fig. 1074C, or Williams 302

C. Swing Check Valves:

1. 2" and Smaller: ASTM B61, bronze body, threaded, regrinding, renewable TFE or cast bronze seat disc, Y pattern, Class 300 (300 psi WP steam), conforming to MSS SP-80, Nibco Fig. T-473.
2. 2-1/2" and Larger: ASTM A216, WCB, steel body, stainless steel seats and discs, bolted bonnet, Class 300, (300 psi WP steam at 500 degrees F), conforming to ASME B16.5, B16.10 and B16.34, Stockham Fig. 30-SF, Powell Fig. 3061, Crane, Milwaukee 3070, Velan Fig. 1114C, or Williams 301

D. Shut-Off Valves:
1. Use gate valves as specified above.

E. Drain Valves:
1. Gate valve as specified above with hose thread adapter and cap. Provide 3/4" minimum drain valve size, except strainer blowdown valves shall be blowdown connection size.

F. Triple Offset Valves (Isolation Valves)
1. Manufacturers: Adams, Zwick, Vanessa, or Quadax
2. Valves shall be triple offset design and constructed of all metal construction with no elastomers or polymers used for sealing. Seal rings shall consist of laminations of 316SS and graphite. Valves shall meet API 598 shut-off rate of zero leakage, bi-directional. Valve shall be designed for operation in 300PSIG steam at 500 deg F.
3. Valves shall be double flanged. Steam valves shall be ANSI Class 300. Condensate valves shall be Class 150. Valve body shall be one piece cast double flanged, welded bodies not permitted.
4. Body shall be carbon steel ASTM A216WCB. Disc shall be conical, constructed of 316 (CF8M) stainless steel. Disc shall have one or two hubs and stem shall not be exposed to the flow.
5. Stem shall be one-piece design. Stem shall be stainless steel. Stem shall be provided with blow-out prevention ring outside of the pressure boundary.
6. Packing shall be a multi-piece adjustable packing gland and be high density, high purity, dye formed graphite, designed to provide leakproof operation at design conditions. Bearings shall be designed to minimize the load and wear. Bearings shall include replaceable graphite seal.
7. Valve shall be tested in accordance with API 598 and have zero leakage. Written test certificates shall be included with valve submittal.
8. Manual gear actuators shall be sized for installation of valve in non-preferred flow direction. Maximum rim pull for valve operation shall not exceed 100 pounds. Gear operated valves shall be provided with self-locking gears. The actuator mounting bracket shall be rigidly dowel pinned to the body to absorb torque loads and shall be centered by machined register between bracket and body.

## 2.6 BOILER BLOWDOWN AND EQUIPMENT DRAIN

A. Gate Valves:
1. 1-1/2 Inch and Smaller: ANSI Class 800, forged steel body gate valve, constructed of ASTM A105, Grade 2 forged carbon steel with threaded connections. Valves shall be bolted bonnet outside screw and yoke design. Seat and wedges shall meet ASTM A-182-F6 chromium stainless steel. Seat rings shall be hard faced. Valves shall conform to ANSI B16-34 pressure-temperature rating. Valves shall be manufactured by Powell, Velan or Vogt.
2. 2 Inch and Larger: ANSI Class 150, flanged, cast steel body gate valve, constructed of ASTM designation A-216-GR-WCB carbon steel. Valves shall be bolted bonnet outside screw and yoke design with pressure-temperature rating conforming to ANSI B16-34-1977. Stems shall be 410 stainless steel. Wedge shall be flexible type and shall be A-216-WCB with 13% chromium overlay or equal. Seat ring shall be hard faced carbon steel or 13% chromium

A-182-F6 stainless. Handwheels and nuts shall be steel. Valves shall be manufactured by Crane, Velan or Powell.

B. Globe Valves:
   1. 1-1/2 Inch and Smaller: Full port, ANSI Class 800, forged steel body, constructed of ASTM A105, Grade 2 forged carbon steel with threaded connections. Valves shall be bolted bonnet outside screw and yoke design. Seat and wedges shall meet ASTM A-182-F6 chromium stainless steel. Seat rings shall be hard faced. Valves shall conform to ANSI B16-34 pressure-temperature rating. Valves shall be manufactured by Powell, Velan or Vogt.
   2. 2 Inch and Larger: ANSI Class 150, flanged, cast steel body, constructed of ASTM designation A-216-GR-WCB carbon steel. Valves shall be bolted bonnet outside screw and yoke design with pressure-temperature rating conforming to ANSI B16-34-1977. Stems shall be 410 stainless steel. Seat ring shall be hard faced carbon steel or 13% chromium A-182-F6 stainless. Handwheels and nuts shall be steel. Valves shall be manufactured by Crane, Velan or Powell.

C. Check Valves:
   1. 1-1/2 Inch and Smaller: 800 psi forged steel, renewable disc, bolted bonnet, threaded ends, swing type. Valves shall be manufactured by Powell, Velan or Vogt.
   2. 2 Inch and Larger: Class 150, flanged, cast steel body, bolted bonnet, universal trim, swing type. Valves shall be manufactured by Crane, Velan or Powell.

## 2.7 SOFTENED WATER VALVES

A. Ball Valves:
   1. 2 1/2 Inch and Smaller: Ball valve with stainless steel ball and stem, full port, 600 psi (4137 kPa) WOG, two-piece bronze body, soldered connections, TFE seats and packing, FS WW-V-35. Apollo 77 Series; Watts or Jamesbury equal.

B. Butterfly Valves
   1. 3 Inch and Larger: Butterfly Valves, lug type 316 stainless steel body and disc-stem, Teflon seat and seal. Provide manual gear operator on valves 6 inch (150 mm) and larger. Bray Series 41 or approved equal.

C. Check Valves:
   1. 2 1/2 Inch and Smaller: Class 125, 200 psi (1380 kPa), bronze, swing check, renewable bronze disc, soldered connections. Crane 134L
   2. 3 Inch and 4 Inch: Class 125, 200 psi, bronze, swing check, renewable bronze disc and plugs, flanged ends, Crane 373.

D. Globe Valves: Class 150, bronze, soldered ends, union bonnet, renewable seat and disc. Powell 1823.

E. Shut-Off Valves:
   1. Use ball and butterfly valves as specified above.

F. Throttling Valves
   1. Use globe valves as specified above.

G. Drain Valves:
   1. Gate valve as specified above with hose thread adapter. Provide 3/4" minimum drain valve size except strainer blowdown valves to be blowdown connection size.

## 2.8 STEAM SAFETY VALVES

A. Size 1 1/2 Inch and Smaller: Threaded ends, spring loaded, all brass construction, brass trimmed. Capacities ASME certified and labeled. Bushings shall not be used. Valves shall be manufactured by Consolidated, Kunkle, Crane or Spirax Sarco.

B. Size 2 Inch and Larger: Flanged, outlets may be threaded, spring loaded, cast steel construction, brass/bronze trimmed. Capacities ASME certified and labeled. Valves shall be manufactured by Consolidated, Kunkle, Crane or Spirax Sarco.

C. Steam pressure safety (relief) valve discharge shall be provided with a drip pan elbow.

D. Steam pressure safety (relief) valves to conform to State Requirements.

E. The pressure at which each steam pressure safety (relief) valve shall open is designated on the Drawings. When such valves are ordered by the Contractor, he shall definitely specify the pressure at which each steam pressure safety (relief) valve is to be set. Each valve shall have a metal tag attached stamped with the valve identification plus the pressure setting.

F. Steam pressure safety (relief) valves shall be provided with body drain.

## 2.9 DRIP PAN ELBOWS

A. Manufacturers: Anvil, Kunkle, Grinnell or Spirax/Sarco.

B. Size to suit safety relief valves. Provide drain connections at bottom of elbow and pan.

C. Extend elbow pipe a minimum of 6 inches inside vent pipe

D. Material: As specified for steam pressure safety (relief) valves.

E. Manufacturers: Spence, Leslie, Mason Neilan, Spirax Sarco, or Fisher.

F. Valve body shall be cast steel, threaded, with stainless steel valve seat, discs, stems and diaphragm. No springs shall be located in the steam space and no stuffing box.

G. Valve threaded ends shall be seal welded.

H. Furnish valves with capacity for entering psi and discharge psi as shown. Valve pressure range shall be manually adjustable. Provide automatic capacity control from 5 to 100% of rated capacity and guaranteed to control delivery pressure with a 2 psi plus or minus variation.

I. Unless otherwise noted, valves shall be self-operated, integral mount pilot type, single seat, normally closed, designed for dead end service, balanced construction, secoweld, condensing chamber.

J. Pressure reducing valve shall be able to provide 97% accuracy in downstream pressure control. Unless otherwise indicated, provide noise attenuating devices as required to meet current requirements of Occupational Safety and Health Act for 8 h noise exposure or as necessary to limit valve noise to 85 dbA at 3 ft from valve. Furnish supporting data for each valve indicating compliance with requirements. Insulation will not be considered as sound attenuating devices.

K. Furnish manufactured removable insulation/jacket valve cover, similar to Spence Insulcap Jacket, with each pressure reducing valve

### 2.10 GAUGE VALVES

A. Unless otherwise indicated, gauge valves for steam, steam condensate and feedwater services shall be gate valves. Gauge valves for all other services shall be needle valves, brass body, 2000 psig, 300°F, similar to Trerice Model 735. Gauge valve size shall match gauge pipe size as specified in Section 23 2116 - Pipe and Pipe Fittings.

### 2.11 CHAIN WHEEL OPERATORS

A. Similar to Babbitt cast iron or ductile iron adjustable sprocket rims and chain guides. Use galvanized or brass chain and chain closure links to form continuous loop of chain at each operator.

## PART 3 - EXECUTION

### 3.1 GENERAL

A. Install valves as shown on plans, details and according to manufacturer's installation recommendations.

B. After piping systems have been pressure tested and put into service, but before final adjusting and balancing, inspect valves for leaks. Adjust, replace packing or replace valves to stop leaks.

C. Install control valves furnished under Control Systems. Provide reducing fittings as required.

D. Refer to Section 23 2116, Part 3 for reducing fittings requirement for valves smaller than pipe size.

E. Provide chain operators for manually operated valves 4" and larger, located more than 8 ft above equipment room floor.

### 3.2 SHUT-OFF VALVES

A. Provide shut-off valves at all equipment and at each automatic valve for servicing.

B. Install steam system shut-off valves in horizontal piping. Shut-off valves are not allowed in vertical piping.

### 3.3 BALANCING VALVES

A. Provide balancing valves where indicated on drawings and as required for complete balancing of water systems.

B. Provide straight inlet and outlet pipe length in accordance with manufacturer's recommendation.

C. For buildings with multiple stories, provide balancing valve in return line at riser take-offs at each floor. Provide shut off valve in supply line at each riser take-off.

### 3.4 GAUGE VALVES

A. Provide gauge valves at each pressure gauge as shown and at each pressure tapping where pressure sensing tubing is connected.

### 3.5 DRAIN VALVES

A. Provide drain valves at all low points of piping systems for complete drainage of systems.

## 3.6 SPRING LOADED CHECK VALVES

A. Provide spring loaded check valve in each pump discharge line.

## 3.7 STEAM SAFETY VALVES

A. Provide steam safety valves where indicated on the drawings.

B. Provide vent to outside of building.

C. If drip pan elbow is specified or indicated, install drip pan elbow at base of vertical discharge pipe and as close to safety valve outlet as possible. Support pipe to keep weight of pipe and accessories from resting on safety valve or drip pan elbow. Run drain lines from drip pan elbow to nearest drain point.

D. Pitch horizontal discharge pipes minimum 1/8” per foot in direction of flow, and provide for complete condensate drainage through drip legs and thermostatic traps at points in discharge pipe where condensate will collect. Pipe outlet of thermostatic trap to nearest drain point.

E. Pipe safety valve tapped body drains to nearest drain point.

F. If "closed" connection to safety valve is indicated (directly hard piped or safety valve connected to discharge pipe through flexible connection) anchor discharge pipe immediately at outlet of safety valve, or immediately downstream of flexible connection. Support pipe to keep weight of pipe and accessories from resting on safety valve

**END OF SECTION**

# SECTION 23 2120 PIPING SPECIALTIES

## PART 1 - GENERAL

### 1.1 RELATED WORK

A. Section 23 0594 - Water Systems Test Adjust Balance

B. 23 0901A Control Systems

C. Section 23 2118 - Valves

### 1.2 REFERENCE

A. Work under this Section is subject to requirements of Contract Documents including General Conditions, Supplementary Conditions, and sections under Division 01 General Requirements.

### 1.3 REFERENCE STANDARDS

A. Metal bellows expansion joints shall be constructed and applied in accordance with "Standards of the Expansion Joint Manufacturer's Association", 8th Edition, 2003.

### 1.4 SUBMITTALS

A. Shop Drawings for all items in this Section including, but not limited to, the following:
   1. Manufacturer's name and model number
   2. Identification as referenced in the Documents
   3. Materials of construction
   4. Dimensional data
   5. Capacities/ranges
   6. Temperature/pressure ratings
   7. Pressure drop
   8. Expansion joint schedule indicating joint tag no., system, proximity to rotating or reciprocating equipment, required movement in all planes, service pressure, test pressure, service temperature, fluid velocity and cycles to failure (both thermally and seismically, if applicable).
   9. All other appropriate data.

## PART 2 - PRODUCTS

### 2.1 MATERIALS

A. Unless otherwise specified, select devices for highest pressures and temperatures existing in respective systems in accordance with ANSI Specifications.

B. Piping specialties in copper piping shall have bronze or brass body with solder ends.

### 2.2 BOILER BLOWOFF TANK

A. Manufacturers: Madden, Pennsylvania Separator Co., Cleaver-Brooks with size, capacity and operation characteristics as indicated on plans and/or as scheduled. Vessel shall be suitable for

not less than 250 psig construction per ASME Section VIII with National Board Number and “U” stamp

B. Furnish unit with inlet, vent and drain connections and stainless steel striking plate.

C. Furnish unit complete with floor supports, aftercooler, automatic temperature water regulator valve sized for 65 deg F city water, water pressure regulator sized for 80 psig city water, gauge glass, strainer and 2-1/2" dial remote mounted thermometer.

D. Aftercooler shall have a stainless steel baffle to mix the cooling water from the temperature regulating valve with the hot blowdown water.

E. Unless otherwise indicated, inlet size of blow off tank shall be as indicated within the equipment schedule.

**2.3** CONTINUOUS BLOWDOWN HEAT EXCHANGER

A. Manufacturers: Madden, Cleaver-Brooks, Bryan or Penn Separator with size, capacity and operation characteristics as indicated on plans and/or as scheduled. Minimum of 250 psig construction per ASME Section VIII with National Board Number and “U” stamp

B. Unit shall be prepiped and mounted with heat exchanger.

C. All components and accessories shall be assembled and a channel frame in a manner which allows gravity drainage. Entire assembly shall be primed and painted with standard factory finish.

D. Aftercooler sized to maintain leaving blowdown temperature below 120°F. Provide iron body internal balanced pressure double seated drain valve with stainless steel trim and hardened seats with stainless steel float.

E. Heat exchanger vessel shall be welded 304 stainless steel mounted directly beneath flash tank. Heat exchanger coil shall be vertical coil type of stainless steel with threaded or flanged connections for make-up, inlet, outlet, and temperature wells in all three connections. Shell side water pressure drop to be no greater than 2 psig for its design flow rate. Provide with drop out coil design for easy cleaning. Provide thermometer gauge panel to display inlet, outlet, and blow down temperatures. Provide liquid filled gauges.

F. Accessories shall include a gauge glass, pressure gauge, ASME safety relief valve, tank inspection port, clean out valve, high level alarm switch with contacts for remote monitoring, audible high-level alarm, support legs, and discharge fitting with temperature bulb.

**2.4** STEAM TRAPS:

A. Manufacturers: Spirax/Sarco, Armstrong and Hoffman.

B. Thermodynamic Traps: 600 psi rated, all stainless-steel construction, integral strainer.

**2.5 THERMOMETERS**

A. Manufacturers: Taylor, Trerice, Weksler, Miljoco, Winters, or Weiss

B. Pipeline mounted thermometers: 9" scale cast aluminum case and frame, clear acrylic plastic window front, permanently stabilized glass tube with mercury free indicating fluid, adjustable angle stem, extended neck suitable for insulated piping as required, and compatible with sockets as specified herein.

C. Panel or remote mounted thermometers: vapor actuated dial type with remote bulb, 4-1/2" minimum diameter cast metal casing with double front. Sensing bulbs shall be of length to suit pipe diameter with extended necks as required for insulated piping, suitable for insertion in separable brass sockets as specified herein.

D. Duct type thermometers: dial type with minimum dial size of 4-1/2" and maximum graduations of 2°F, complete with swivel mounting arrangement to permit up to 45° rotation for easy reading.

E. Range of thermometers shall be:

| Service | Scale Range | Increment |
|---|---|---|
| Chilled Water | 0°F to 100°F | 1°F |
| Condenser Water | 30°F to 130°F | 1°F |
| Steam Condensate | 30°F to 300°F | 2°F |

F. Thermometers by temperature control manufacturer meeting above Specification will be acceptable.

## 2.6 THERMOWELLS AND TEST WELLS

A. Brass construction for carbon steel piping with threaded connections suitable for thermometer bulbs and control sensing devices, well length suitable for pipe diameter with extended neck as required to suit pipe insulation. Trerice 5550 Series or approved equal.

B. For test wells for stainless steel piping, use same material as piping.

## 2.7 PRESSURE GAUGES

A. Manufacturers: Ashcroft, U.S. Gauge, Marsh, Trerice, Miljoco, Marshalltown, Weksler, Winters or Weiss equal to Trerice 600 Series

B. Minimum 4-1/2" diameter die cast aluminum case, glass or acrylic plastic window, phosphor bronze bourdon tube with bronze bushed movement, recalibration from front of gauge dial and 1/4" NPT forged brass socket.

C. Gauge accuracy shall meet ANSI B40.100 Grade 1A (±1% full scale).

D. Reading range of gauges shall be:

| Service | Scale Range |
|---|---|
| Chilled Water | 0 to 100 psig |
| Low Pressure Steam | 30" mercury vacuum to 30 psig |
| High Pressure Steam | 0 to 150 psig for maximum steam pressure of 80 psig. |
| High Pressure Steam | 0 to 250 psig for maximum steam pressure of 180 psig. |
| Softened Water | 0 to 100 psig |

E. Pressure Snubbers:

1. 1/4" or 1/2" size, matching gauge pipe size as specified in Section 23 2116 - Pipe and Pipe Fittings, 1000 psig WP. Brass for carbon steel pipe or copper pipe. Stainless steel for stainless steel pipe.

F. Coil Syphons:

1. 1/4" or 1/2" size, matching gauge pipe size as specified in Section 23 2116, 500 psig WP. Material shall match gauge pipe material.

## 2.8 PRESSURE/TEMPERATURE TEST STATIONS

A. Pete's plugs made by Peterson Equipment Company, Sisco, Super Seal by Flow Design Inc. (FDI), or approved equal.

B. Test plugs shall be 1/4" or 1/2" NPT, brass body and cap, 1-1/2" length for non-insulated pipe and 3" length for insulated pipe, with Nordel self-closing valve cores, rated at 500 psig at 275°F, and shall receive either temperature or pressure probe with 1/8" OD.

C. Furnish portable test kit within durable case containing the following:
   1. A compound pressure gauge,3-1/2" dial, 30" Hg – 100 psi, field calibration screw, surge protector and stainless steel gauge adapter with 1/8" diameter probe (2% accuracy of mid range).
   2. Two pocket testing thermometers, 1-3/4" dial, 5" long stainless steel stem, 0 - 220°F and 25 - 125°F ranges with external calibration (1% accuracy of entire scale).

## 2.9 PIPELINE STRAINERS

A. Manufacturers: Metraflex, Mueller Steam Specialty, Hoffman, Eaton (formally Hayward), Sarco, Keckley, Armstrong, Wheatley, Conbraco or Streamflo

B. Liquid System:
   1. 2" and Smaller: full pipeline size, Y-type, with removable screen caps, cast iron, Class 250 (400 psi/150°F WOG), threaded ends for carbon steel piping and bronze, Class 150 (200 psi/150°F WOG),, solder ends for copper piping. Screen caps shall have threaded blowdown connection.
   2. 2-1/2" and Larger: full pipeline size, Y-type, Class 125(200 psi/150°F WOG), cast iron, flanged ends. Furnish strainer with bolted screen retainer and off-center blowdown connection.
   3. Strainers manufactured by grooved coupling manufacturer will be acceptable where grooved pipe connection system is allowed.
   4. Liquid Service Screens: stainless steel with screen perforation as indicated below. For strainers serving equipment where manufacturer requires specific screen perforation, provide per manufacturer requirements. Maximum pressure drop shall be 4 ft WG through clean strainer.

| Pipe Size | Closed System | Open System |
|---|---|---|
| 2" and smaller | 1/32" (20 mesh) | 1/8" |
| 2-1/2" to 4” | 1/16” | 1/8" |
| 5" and over | 1/8" | 1/8" |

**2.10**

## 2.10 AIR SEPARATORS

A. Manufacturers: Bell and Gossett, Amtrol, Armstrong or Taco

B. 1-1/2” and Smaller: Cast iron construction with steel diffuser tube, bottom and side threaded inlet connections, bottom and top threaded outlet connections, threaded top connection for air elimination, designed for maximum 125 psig WP.

C. 2" and Larger:
   1. Centrifugal type, cast iron or carbon steel construction, flanged connection, threaded connections acceptable for 3" and smaller, perforated stainless steel air collector tube to direct air toward air elimination connection at top of unit, inlet and outlet connections tangential to vessel shell, bottom blow down connections, constructed and stamped in accordance with ASME Boiler and Pressure Vessel Code for 125 psig design pressure at 350°F.
   2. Vessel shell diameter shall be at least 3 times nominal inlet/outlet pipe diameter.
   3. Manufacturer's data sheet shall include air collection efficiency and pressure drop at design flow scheduled.

## 2.11 AIR VENTS

A. Manual Air Vents:
   1. Manufacturers: Bell & Gossett Model 4V, 125 psig at 210°F or approved equal. Use 1/2" ball valve for main pipes.

B. Automatic Air Vents:
   1. Manufacturers: Amtrol, Watson McDaniel, B&G, or Hoffman
   2. Metal construction, non-corrosive working parts, 150 psig WP at 240°F
   3. Normal capacity vent shall be similar to B&G Model 87
   4. High capacity vent shall be float actuated and shall have minimum air elimination rate of 10 cfm at 100 psig, similar to B&G Model 107A.

C. Thermostatic Air Vents:
   1. Balanced pressure type, cast bronze body, bronze bellows caged in stainless steel, stainless steel valve and seat, 1/2" threaded connection, 125 psig WSP, equal to Armstrong Model TV-2.

## 2.12 STRAIGHTENING VANES

A. Manufacturers: Daniel Industries, Inc., Houston, Texas or approved equal

B. Straightening vane assembly shall consist of series of carbon steel pipes firmly welded together and to line size pipe. Furnish vanes with class 150 psi flanges for insertion into piping system.

## 2.13 CENTRIFUGAL SEPARATORS

A. Manufacturers: Lakos Separators, Griswold, or approved equal

B. Vertical centrifugal vortex design shall remove 98% of solids 74 microns and larger. Unit shall be designed with tangential entry into acceptance chamber, then drawn through internal tangential slots and accelerated into reduced diameter separation cylinder. Solids heavier than water shall be deposited into collection chamber. Collected solids shall be drawn off through bottom outlet. Furnish units with removable heads on each end for complete serviceability and cleaning.

C. Furnish separate bag filter housing and filter to collect up to 25 lbs of filtered debris larger than 40 microns. Housing to have inlet and outlet connections. Furnish one extra filter bag per filter housing.

D. Separator and filter housings shall be constructed of standard carbon steel for 125 psig WP constructed in accordance with ASME Code. Connections larger than 2" shall have 150 lb 150 psi weld flange connections. Factory paint housings with 2 coats of enamel based paint, plus metal primer coat.

E. Submit independent lab test report indicating separator efficiency.

## PART 3 - EXECUTION

### 3.1 GENERAL

A. Install piping specialties as indicated on plans, details and according to manufacturer's recommendations.

### 3.2 BOILER BLOW DOWN SEPARATOR AND BLOW DOWN HEAT RECOVERY UNITS

A. Install separators on structural steel framework as shown. Extend vent lines as indicted on the drawings.

B. Install aftercooler, valves, piping specialties and associated piping including cold water piping from branch pipe provided by the Contractor.

C. Demonstrate proper operation of aftercooler temperature controls.

### 3.3 INSTALLATION, STEAM SYSTEM VALVES AND SPECIALTIES

A. Trap sizing assumes condensate at steam temperature, with a 3 to 1 safety factor for equipment, and 2 to 1 safety factor for steam piping drips using 10 percent flow.

B. Where steam load is not indicated, make trap sizes same as adjoining pipe.

C. Traps used on steam mains and branches shall be minimum 3/4-inch size.

D. Use thermodynamic traps to drain condensate from stream main headers and branch lines.

E. Provide trap stations as shown and as follows:
   1. Base of risers.
   2. Changes in elevation.
   3. Ends of mains.
   4. Before control valves.
   5. At intervals of 100 feet on mains with pressures of 100 psi and below.
   6. At intervals of 250 feet on mains with pressures above 100 psi.

F. Traps 1 inch and smaller shall have union connections. Traps 1 1/4 to 2 1/2 inch shall have threaded flange connections. All other traps shall have welded flanges.

G. Remove thermostatic elements from steam traps during temporary and trial usage, and until system has been operated and dirt pockets cleaned of sediment and scale.

H. Pipe safety relief valves to outdoors. Provide drip pan elbow with drain connection to nearest floor drain.

I. When several safety relief valve vents are connected to a common header, header cross section area shall equal sum of individual vent outlet areas

### 3.4 THERMOMETERS

A. Install thermometers in thermowells in locations indicated.

## 3.5 THERMOMETER TEST WELLS

A. Install test wells in locations as shown and at each point where temperature-sensing device is required under Control Systems.

## 3.6 PRESSURE GAUGES

Install gauges for services other than steam with pressure snubbers and gauge valves.

## 3.7 PRESSURE GAUGE TAPPING

A. Install tappings with gauge valves at each point where sensing device is required under Control Systems and at gauge locations as shown.

B. Use threadolets or tee fittings to mount gauge tappings or test stations. Install fittings for side mounting to avoid collection of air or dirt.

## 3.8 PRESSURE/TEMPERATURE TEST STATIONS

A. Pete's plug may be used in lieu of thermometer test well and pressure gauge tappings.

B. Use threadolets or tee fittings to mount gauge tappings or test stations. Install fittings for side mounting to avoid collection of air or dirt.

## 3.9 PIPELINE STRAINERS

A. Provide drain valve at each strainer blowdown connection with hose threaded adapter and cap. Valve size shall be same as blowdown connection size.

B. Install strainers in water systems on suction side of all pumps, entering side of automatic control valves of heating and cooling coils of air handling units, and as indicated elsewhere.

C. Install clamped cover basket strainers in condenser water system as indicated.

## 3.10 AIR SEPARATORS

A. Provide valved blow down connections and extend drain piping to nearest floor drain.

## 3.11 AIR VENTS

A. Install manual air vents at all high points in water systems where air may collect and where shown on drawings.

B. Install automatic air vent at top of air separator and where shown on drawings. Provide shut-off valve to isolate air vent from system. Pipe automatic air vent to the nearest floor drain.

C. Install high capacity automatic air vent at air separator.

## 3.12 THERMOSTATIC AIR VENTS

A. Install thermostatic air vents where shown. Install vents at the highest points of steam chambers. Locate vents higher than outlet connections to chambers.

## 3.13 STRAIGHTENING VANES

A. Provide straightening vanes where flow sensor manufacturer's installation instructions require greater length of straight upstream piping than can be obtained in available space.

**END OF SECTION**

# SECTION 23 2123 PUMPS

## PART 1 - GENERAL

### 1.1 RELATED WORK

A. Section 20 0513 - Motors

B. Section 23 0550 - Vibration Isolation

C. Section 23 2120 - Piping Specialties

### 1.2 REFERENCE

A. Work under this Section is subject to requirements of Contract Documents including General Conditions, Supplementary Conditions, and sections under Division 01 General Requirements.

### 1.3 SUBMITTALS

A. Shop Drawings including, but not limited to, the following:
   1. Manufacturer's name and model number
   2. Identification as referenced in the documents
   3. Capacities/ratings
   4. Pump curves with operating point clearly indicated. For parallel pump applications, indicate operating point of combined case as well as operating point of only one pump.
   5. Motor data (refer to Section 20 0513 - Motors)
   6. Seals
   7. Materials of construction
   8. Dimensions and weights
   9. Manufacturer's installation instructions
   10. All other appropriate data

### 1.4 DESIGN CRITERIA

A. Pump sizes, capacities, pressures and operating characteristics shall be as scheduled.

B. Pumps shall meet or exceed operating efficiencies scheduled.

C. Furnish pumps complete with motors, impellers, drive assemblies, bearings and accessories as hereinafter specified. Furnish pump couplings with OSHA compliant coupling guards.

D. Select motor with sufficient hp rating for non-overloading operation over entire pump curve.

E. Furnish each pump and motor with nameplate giving manufacturer's name, serial number of pump, capacity in gpm and head in ft at design condition, hp, voltage, frequency, speed and full load current.

F. Test pumps hydraulically at 150% of rated pressure per Hydraulic Institute Standards, clean and paint before shipment. Manufacturer shall certify all pump ratings.

G. Pumps shall operate without objectionable noise or vibration.

H. After completion of balancing, if water balancing results in pump discharge balancing valve being closed 50% or more, replace or trim impeller so that balancing valve is opened at least 75% to maintain design flow rate. Where pumps are driven by VFDs, balancing should be performed with pumps at design speed.

I. Furnish one spare seal for each pump to Owner.

## PART 2 - PRODUCTS

### 2.1 SEPARATELY COUPLED, VERTICALLY MOUNTED, TURBINE CENTRIFUGAL PUMPS

A. Manufacturers: Subject to compliance with requirements, available manufacturers offering products that may be incorporated into the Work include, but are not limited to, the following:
   1. American-Marsh Pumps.
   2. Aurora Pump; Division of Pentair Pump Group.
   3. Bell & Gossett
   4. Crane Pumps & Systems.
   5. Flowserve Corporation.
   6. Mepco, LLC.
   7. PACO Pumps.
   8. Patterson Pump Co.; a subsidiary of the Gorman-Rupp Co.
   9. Peerless Pump Company.
   10. Pentair Water; Fairbanks Morse.

B. Description: Factory-assembled and -tested, multistage, centrifugal, impeller-betweenbearings, end-suction pump; designed for installation with pump and motor shafts mounted vertically and projecting into a sump.

C. Pump Construction:
   1. Pump Bowl: Cast iron, with cone or basket strainer, replaceable bronze wear ring, and suction bell.
   2. Impeller: ASTM B 584, cast bronze; statically and dynamically balanced and keyed to shaft. For pumps not frequency-drive controlled, trim impeller to match specified performance.
   3. Pump Shaft: Stainless steel sized according to manufacturer's requirements.
   4. Pump Bearings: Water-lubricated bronze and rubber sleeve bearings in cast-iron housing.
   5. Pump Column: ASTM A 53/A 53M, Grade B steel pipe.
   6. Seal: Mechanical seal consisting of carbon rotating ring against a ceramic seat held by a stainless-steel spring, and Buna-N bellows and gasket. Include water slinger on shaft between motor and seal.
   7. Seal: Packing seal consisting of stuffing box with a minimum of four rings of graphite impregnated braided yarn with bronze lantern ring between center two graphite rings, and bronze packing gland.

D. Shaft Coupling: Keyed with locking collets

E. Discharge Head: ASME B16.1, Class 125 or Class 250 (see schedule) discharge flange with threaded gage tapping. Top of discharge head shall have a registered fit to accurately locate the driver.

F. Drive Ratchet: Nonreversing ratchet.

G. Hollow Shaft Motor: Single speed and secured to discharge head.
   1. Electrical Components, Devices, and Accessories: Listed and labeled as defined in NFPA 70, by a qualified testing agency, and marked for intended location and application.
   2. Comply with NEMA designation, temperature rating, service factor, and efficiency requirements for motors specified in Section 230513 "Common Motor Requirements for HVAC Equipment."
      a. Enclosure: Open, dripproof.
      b. Enclosure Materials: Cast iron or Rolled steel.
      c. Motor Bearings: Grease lubricated.

## PART 3 - EXECUTION

**3.1** INSTALLATION

A. Install pumps in strict accordance with manufacturer's instructions to avoid any stress and misalignment.

B. Install pumps to provide access for periodic maintenance including removing motors, impellers, couplings, and accessories.

C. Independently support pumps and piping so weight of piping is not supported by pumps and weight of pumps is not supported by piping.

D. Fill under base plates of vertical turbine pumps with non-shrinking grout in accordance with manufacturer's recommendation and Hydraulic Institute Standards.

E. Install full line size spring loaded check valve and balancing valve in pump discharge piping.

F. Where pump connection size and indicated line sizes are not identical, provide necessary concentric reducers/increasers for vertical piping at pump connection and eccentric reducers/increasers for horizontal piping at pump connection. Install eccentric reducers/increasers with top of pipe level. Valves and piping specialties shall be full line size as indicated on drawings.

**3.2** STARTUP

A. Verify that piping system has been flushed, cleaned and filled.

B. Prime pump, vent air from casing and verify that rotation is correct. To avoid damage to mechanical seals, never start or run pump in dry condition.

C. Verify lubrication of motor and pump bearings and lubricate properly in accordance with manufacturer’s recommendation and Section 20 0000, Part 3, under LUBRICATION.

D. After several days' operation, verify removal of disposable startup strainer in suction diffuser and turn them over to Owner.

**END OF SECTION**

**SECTION 23 2514 CHEMICAL TREATMENT SYSTEMS AND FINAL SYSTEM FILL**

## PART 1 - GENERAL

### 1.1 RELATED WORK

A. Section 23 2116 - Pipe and Pipe Fittings

### 1.2 REFERENCE

A. Work under this Section is subject to requirements of Contract Documents including General Conditions, Supplementary Conditions, and sections under Division 01 General Requirements**.**

### 1.3 SUBMITTALS

A. Shop Drawings for each system including, but not limited to, the following:
   1. Manufacturer's name and model number
   2. Capacities/ratings
   3. Chemicals; description of chemicals, its composition and function
   4. Operating sequence
   5. Composite wiring diagrams
   6. Materials of construction
   7. Dimensions and weights
   8. Manufacturer's installation instructions
   9. All other appropriate data

B. Coordinate with Owner and Owner’s chemical treatment representative and submit overall installation diagram for each system locating chemical injecting points, bleed-off assemblies, drains, water meters, number of tanks and pumps, and field piping.

C. Submit directly to Owner, Material Safety Data Sheets (MSDS) for all chemicals used in chemical treatment systems. Include with MSDS written notice of Owner's responsibility to notify its employees of the use of those chemicals.

### 1.4 DESIGN CRITERIA

A. Chemicals for pipe cleaning shall be suitable for pipe material, fluid medium and intended treatment.

B. Materials of construction for equipment used shall be compatible with water treatment chemicals provided.

### 1.5 GENERAL

A. Provide flushing and drain connections for complete flushing and drainage of the entire system.

B. Remove strainers, open all valves and continuously flush the system with clean domestic water until all foreign matter is removed.

C. After hydrostatic pressure testing, Owner shall provide final fill of the system using water. Owner shall provide chemical treatment required for this final system fill.

## PART 2 - PRODUCTS

### 2.1 MANUFACTURERS

A. Manufacturers:
   1. GE Water & Process Technologies (formerly Betz-Dearborn)
   2. Bluegrass KESCO

### 2.2 PIPING SYSTEM CLEANER

A. Use cleaning compound to remove organic soil, hydrocarbons, flux, pipe mill varnish, pipe compounds, iron oxide, and like deleterious substances, with or without inhibitor, suitable for system metals without deleterious effects. Cleaner shall not contain phosphate.

## PART 3 - EXECUTION

### 3.1 PIPE CLEANING

A. General:
   1. Contractor shall coordinate with Owner and Owner's chemical treatment representative during construction to provide taps and other coordination items to assist final chemical treatment of these systems.
   2. Piping systems shall be cleaned before they are used for any purpose except pressure tests, which shall be conducted before cleaning.
   3. The expected procedure to clean the 36" chilled water piping in the spline will be:
      a. Contractor is to provide water pipes to fill pipes for hydrostatic pressure testing. Contractor shall provide valves/taps to have means of inserting water into pipe. Suggest that contractor to provide 1" hose connection. Contractor shall be able to use a domestic water line from the plant with city water and perform hydrostatic testing with this water.
      b. After successfully hydrostatic pressure test, contractor shall drain pipes completely. Owner to witness draining and if pipe is completely drained Owner to witness contractor flushing with city water for a short amount of time, determine by Owner.
      c. Contractor shall then refill pipes and leave completely full.
      d. Two days prior to UK putting the piping into service, contractor is to drain pipes completely.
      e. Owner will fill and flush piping. As the piping is filling, Owner will supply chemicals to chemically treat the water before putting pipe into use.

**END OF SECTION**

# SECTION 23 3114 DUCTWORK

## PART 1 - GENERAL

### 1.1 RELATED WORK

A. Section 20 0529 - Mechanical Supporting Devices

### 1.2 REFERENCE

A. Work under this Section is subject to requirements of Contract Documents including General Conditions, Supplementary Conditions, and sections under Division 01 General Requirements**.**

### 1.3 SUBMITTALS

A. For each duct system, submit schedule utilizing reinforcement tables from SMACNA HVAC Duct Construction Standards Metal and Flexible where applicable. Each duct system schedule shall include, but not be limited to, the following:
   1. Name of Contractor/manufacturer fabricating each duct system
   2. Material and gauge
   3. Pressure class
   4. Transverse joint type and length and reinforcement rigidity class with designated joint T number or proprietary duct connection if utilized for each system
   5. Certified test results of proprietary joint products, if used, tested in accordance with SMACNA procedures
   6. Intermediate reinforcement spacing and rigidity class with metal angle dimensions and gauge
   7. Type of longitudinal seam
   8. Fitting construction details
   9. Support methods including spacing, upper attachments, and lower attachments
   10. Sealant and gasket
   11. Sealing class

B. Duct leakage testing methods, apparatus and apparatus certification signifying meter is in conformance with ASME Requirements for testing meters.

### 1.4 DELIVERY, STORAGE AND HANDLING

A. Protect duct and fittings from damage due to normal handling during shipment and storage. Protection shall be applied to ends of duct to prevent dirt and moisture from entering ducts and fittings.

### 1.5 DESCRIPTION

A. Furnish and erect ductwork free of objectionable vibration, chatter, and pulsations. Verify dimensions at site, making field measurements and drawings necessary for fabrication and erection.

B. Duct sizes indicated are net inside dimensions.

C. Where size for a duct segment is not indicated, the duct segment size shall be equal to the largest duct segment to which it is connected. Transition to smaller size shall occur on side of fitting where smaller size is indicated.

### 1.6 DESIGN CRITERIA

A. All products shall conform to NFPA 90A, and shall possess flame spread rating of not over 25 and smoke developed rating no higher than 50.

B. Unless otherwise indicated, construct all ductwork of galvanized sheet metal for pressure class not less than 2" WG for positive pressure ductwork and not less than -2" WG for negative pressure ductwork.

C. Ductwork shall comply with Local, State and Federal requirements.

D. Unless otherwise indicated, pressure class for constant air volume system ductwork shall be equal to external static pressure (fan entrance or discharge pressure minus associated unit internal component pressure drop), but not less than ± 2" WG.

E. Duct transverse joints and reinforcement material, including angle ring flanges and stiffeners, shall be of same material as duct.

F. Except as modified in this Section of specifications or on drawings, use material, weight, thickness, gauge, construction and installation methods as outlined in the following SMACNA publications:
   1. HVAC Duct Construction Standards Metal and Flexible, 3rd Edition, 2005, for rectangular and round ductwork up to positive 10" WG and negative 10" WG and flat oval ductwork up to positive 10" WG.
      a. Tie rods shall be 1/2" or 3/4", galvanized steel EMT/conduits with bolt assembly consisting of rubber washer and friction anchored threaded insert similar to Ductmate Easyrod or PPI Condu-Lock.
      b. Midpanel tie rods are not allowed.
   2. Round Industrial Duct Construction Standards, 2nd Printing 1999
   3. Round Industrial Duct Construction Standards, 2nd Edition, September, 1999
   4. Rectangular Industrial Duct Construction Standards, 2nd Edition, 2004
   5. Accepted Industry Practice for Industrial Duct Construction, 2nd Edition, 2008, for round ductwork -4" to 20" WG (Table 1-A) and for rectangular ductwork -4" to 20" WG (Table 2-A).
   6. Adhesives and sealants used on installation of ducts shall comply with South Coast Air Quality Management District (SCAQMD) Rule #1168; Indoor Environmental Quality Section, Credit IEQ-4.1.

## PART 2 - PRODUCTS

### 2.1 GALVANIZED STEEL SHEET

A. Lock Former Quality (LFQ), cold rolled, open hearth soft steel sheet capable of double seaming without fracture, ASTM A924/A924M or ASTM A653/A653M. Galvanized coating shall be G90.

B. Use G90 Galvaneal or Zincgrip where painting is specified.

## 2.2 MANUAL BALANCING DAMPERS

A. Manufacturers: Ruskin, Greenheck, Vent Products, Pottorff or Air Balance, constructed in accordance with SMACNA HVAC Duct Construction Standards, except as modified below.

B. Rectangular Dampers:
   1. For low pressure ductwork, for damper blade height up to 12”, use single blade type with minimum 22 ga galvanized steel blade with minimum 3/8” rod for blade width up to 18”, and with minimum 18 ga galvanized steel blade with minimum 1/2” continuous rod for blade width from 19” to 48”. For damper blade height more than 12”, use multiple blade type with minimum 16 ga galvanized steel channel frames, opposed blade linkage operation, with blades minimum 16 ga and 6” to 8” maximum blade width, minimum 1/2” continuous rod and 1/2” x 1/2" galvanized steel angle blade stops. Bearings shall be nylon or molded synthetic.

C. Single Blade Round Dampers:
   1. For low pressure ductwork, damper shall have blade 24 ga, but no less than two gauges more than duct gauge. Rod shall be minimum 3/8” diameter or square continuous. Bearings shall be nylon or molded synthetic.

D. Provide damper operators with locking devices and damper position indicators. Sheet metal screws are not allowed in construction or installation of dampers. Use rivets or tack welds.

E. Dampers shall be properly stiffened and fabricated to prevent vibration, flutter or other noise.

# PART 3 - EXECUTION

## 3.1 GENERAL

A. Install ductwork parallel to building walls and ceilings and at such heights not to obstruct any portion of ceiling, window, doorway, stairway, or passageway. Install ductwork to allow adequate access and service space for equipment. Refer to drawings and/or manufacturer's recommendations. Install vertical ductwork plumb. Where interferences develop in field, offset or reroute ductwork as required to clear such interferences. In all cases, consult drawings for exact location of duct spaces, ceiling heights, door and window openings or other architectural details before installing ductwork.

B. Make allowances for beams, pipes or other obstructions in building construction and for work of other contractors. Check plans showing work of other trades and consult with Engineer in event of interference. Transform, divide, or offset ducts as required, in such a manner as to maintain same cross sectional area of duct as indicated on drawings. Where it is necessary to install pipes or similar obstructions through ducts, consult with Engineer and obtain written approval from Engineer and Owner. If approved, provide streamlined encasement or collar designed in accordance with SMACNA Standards and seal to prevent air leakage.

C. Ductwork shall be free of kinks and dents.

D. Fabricate and install duct, fittings, joints, seams, reinforcement, supports, sealing, liner, etc., in sizes indicated on drawings and in accordance with manufacturer's published data and SMACNA Standards except as modified in this section of specifications or on drawings.

E. Provide transitions where different size or different shape ductwork segments are connected. Use concentric transitions unless otherwise shown. Unless otherwise indicated, make diverging

transitions with maximum angle of 15° per side (30° total diverging) and converging transitions with maximum angle of 25° per side (50° total converging).

F. Provide transitions at ductwork system components and connections to equipment.

G. Refer to ductwork symbols list on drawings for additional and dimensional requirements for fittings.

H. Seal duct seams and joints to meet SMACNA Class A as minimum for all ductwork including low-pressure ductwork.

I. Construct ductwork so that interior surfaces are smooth. Internal duct hangers and internal bracing are not allowed. Refer to Part 1, Design Criteria for internal tie rods.

J. Install motor operated dampers and connect to or install equipment furnished by others. Provide necessary blank-off plates or transitions to mount control dampers as specified in Section 23 0901 - Control Systems Integration.

K. Do not install ductwork over electrical panelboards, switchgear, switchboards or motor control centers.

L. When original galvanized finish is altered or damaged, apply field galvanizing paint as follows:
   1. Prepare surface with use of power sanders or wire brushes to remove rust, paint, etc.
   2. Apply cold galvanizing material equal to ZRC Products, Inc.

## 3.2 ELBOWS

A. Rectangular Duct (EA):
   1. Use radius elbows with centerline radius to width ratio of 1.5 (SMACNA Type RE 1).
   2. Where 1.5 centerline radius elbows do not fit, use radius elbows with centerline radius to width ratio of 1.0 (SMACNA Type RE 3).
   3. Where 1.0 centerline radius elbows do not fit, use radius elbows with centerline radius to width ratio of 0.75 (SMACNA Type RE 3) or 45° throat with radius heel elbows (SMACNA Type RE 8).
   4. Use splitter vanes for 1.0 radius elbows, 0.75 radius elbows and 45° throat with radius heel elbows as follows;
      a. No vanes for duct with width less than 24”
      b. Single vane for duct with width 24” to 36”
      c. Two vanes for duct with width over 36”
   5. Fabricate splitter vanes in accordance with SMACNA HVAC Duct Construction Standards, Chart 4-1, (p. 4.11) and Figure 4-9 (p. 4.13).
   6. Square throat elbows with or without turning vanes are not allowed unless specifically indicated. Square throat elbows without turning vanes may be used for transfer air ducts.

B. Round and Oval Duct:
   1. Unless specific type is indicated, use radius elbows with centerline radius to diameter ratio of 1.5 regardless of duct velocity. Where 1.5 radius elbows do not fit, use 1.0 radius elbows.

## 3.3 LONGITUDINAL SEAM

A. Rectangular Duct:

1. Unless otherwise indicated, use Pittsburgh lock seam.
2. Seal longitudinal seams with approved sealant or pre-sealed with encapsulated mastic.
3. Button punch snap lock construction (SMACNA L-2) may be used for ductwork that is both 2" WG (+ or -) and lower, and 36" and smaller in width or height. For ductwork over 24" in width or height, add screw 4" from each end.
4. Button punch snap lock construction is not allowed for ductwork in chases and areas above inaccessible ceiling.
5. Button punch snap lock construction is not allowed on aluminum ductwork.

B. Round and Oval Duct:
1. Unless otherwise indicated, longitudinal seams shall be in accordance with SMACNA HVAC Duct Construction Standards with the following exceptions.
a. SMACNA seam types RL-3, 6A, 6B, 7 and 8 shown in Figure 3-2 are not allowed.

**3.4** TRANSVERSE JOINT

A. Rectangular Duct:
1. Transverse joints shall be in accordance with SMACNA HVAC Duct Construction Standards.
2. Ductmate 25/35 connection systems with corner clips or optional nuts and bolts may be used. Incorporate use of all Ductmate accessories to ensure integrity of transverse connection. Install joints in strict accordance with the latest edition of Ductmate 25/35 Assembly and Installation Instruction Manual and Duct Construction Standards. Nexus or WDCI will be acceptable.
3. Lockformers TDC or Engles TDF may be used in accordance with T-25 flanges of SMACNA HVAC Duct Construction Standards Metal and Flexible, 2005, provided that corner pieces with bolts are used. If TDF/TDC flanges are damaged, replace the damaged joint(s) by straightening and reinforcing with minimum 1-1/2" x 1-1/2" x 1/4" angle at each side of transverse joint.
4. Refer to Detail for non-externally insulated outdoor ductwork.

B. RoundDuct:
1. Unless otherwise indicated, use beaded sleeve joints (SMACNA RT-1) with minimum 2" insertion length or flange joints (SMACNA RT-2 or RT-2A).
2. Connection systems manufactured by Ductmate Industries (Spiralmate and Ovalmate) or McGill AirFlow (Uni-flange) may be used for supply air ductwork.
3. AccuFlange connected systems may be used with gaskets specified in Part 2 of this Section.

**3.5 DUCT SUPPORTS**

A. Unless otherwise indicated, use straps or Z bar hangers with 3/8" rods to support rectangular ducts 60" wide and smaller and trapeze hangers with rods or angles to support rectangular ducts over 60" wide.
1. Use trapeze hangers to support externally insulated ductwork with weight bearing inserts. Refer to Section 20 0700 – Mechanical Systems Insulation and details.

B. For round ducts 24" diameter or smaller, use single hanger.
1. Cable Suspension System may be used up to 24" diameter at spaces higher than 8 ft above floor or platform.
2. Round Duct Strap Bracket by Ductmate Industries may be used up to 24" diameter.

C. For round ducts 25” diameter or larger, use 2 minimum 3/8” rods, with trapeze in accordance with the following schedule:

| Duct Size | Trapeze (Half Round) |
|---|---|
| 25” to 36” | 1-1/2” x 1-1/2” x 1/8" |
| 37” to 48” | 1-1/2” x 1-1/2” x 1/4" or 2” x 2” x 1/8" |
| 49” to 60” | 2” x 2” x 1/4" |
| 61” to 84” | 2-1/2” x 2-1/2” x 1/4" |

D. Refer to Section 20 0700 - Mechanical Systems Insulation for ductwork insulation, weight bearing inserts and insulation protection shield requirements.

E. Support ducts located on roof as detailed.

F. Support vertical ducts at every floor, but not exceeding 12 ft.

G. The following upper attachments, upper attachment devices, lower hanger attachments, hanger devices, and/or hanger attachments are not allowed except where specifically indicated:
   1. Hook or loop
   2. Nailed pin fasteners
   3. Expansion nails without washers
   4. Powder actuated fasteners (forced entry anchors). Forced entry anchors may be used for upper attachments of flexible ductwork supports.
   5. Beam or "C" clamps without retaining clips or friction clamps (provide retaining clips for "C" clamps)
   6. Non-factory manufactured upper attachments for metal pan deck including wire coil and double circle (Items 16 and 17 of Fig 5-4 of SMACNA HVAC Duct Construction Standards 2005)
   7. Wire hanger
   8. Trapeze hangers supported by wires or straps
   9. Rods, straps or welded studs directly attached to metal deck
   10. Drilled hole with attachment to structural steel
   11. Lag screw expansion anchor
   12. Rivets
   13. Non-metallic hangers or straps

H. Supporting devices shall be standard products of manufacturers having published load ratings.

I. Refer to Section 20 0529 - Piping and Equipment Supporting Devices for additional support requirements including attachments to structures.

J. Unless Architectural Documents indicate the required framing, provide angle iron framing around roof opening where duct penetrates through roof decking, to maintain roof decking structural integrity in accordance with roof decking manufacturer's recommendations. This is not required for concrete decking. For concrete decking, consult with the project structural engineer for location and size of opening prior to execution of Work.

## 3.6 PROTECTION OF DUCTWORK

A. Protect ductwork during construction against entry of foreign matter and construction dirt.

B. Keep ductwork capped when work is complete for the day or when duct is not being worked on or added to. Use of polyvinyl (VISQUEEN) with duct tape wrap is an adequate measure as long as it is secure with no openings or tears in product.

C. If ductwork is not protected, remove dirt and foreign matter from the duct system and obtain inspection and approval from Engineer upon completion of cleaning before operating fans.

## 3.7 LOW PRESSURE DUCT CONSTRUCTION (PRESSURE CLASS 2" WG AND UNDER)

A. Use welds, rivets or nuts, and bolts for fabricating ductwork. Fully threaded sheet metal screws may be used on duct hangers, transverse joints and other SMACNA approved locations if screw does not extend more than 1/2" into duct. Sheet metal "TEK" screws 3/4" in length may be used as fasteners in conjunction with factory made transverse joints.

B. Unless otherwise indicated, construct branch take-off fittings as follows:

1. For branch take-offs including branch ducts serving more than one diffuser or grille, use 45° entry fittings. For supply air ducts, conical taps may be used.
2. For take-offs serving single diffuser, register or grille, use straight spin-in collars with manual balancing dampers.

C. Splitter dampers and/or extractors are not allowed.

## 3.8 MANUAL BALANCING DAMPERS

A. Install manual balancing dampers in exhaust branch ducts, as shown on drawings and as required to regulate airflow to meet air balance requirements.

B. Install dampers as close as possible to take-offs.

C. Install balancing dampers so as not to flutter or vibrate and as far as possible upstream from the air outlet.

**END OF SECTION**

**SECTION 23 6000 PRIMARY COOLING EQUIPMENT**

## PART 1 - GENERAL

### 1.1 RELATED WORK

A. Section 20 0513 - Motors

B. Section 20 0700 - Mechanical Systems Insulation

C. Section 23 0550 - Vibration Isolation

D. Section 23 0901A - Control Systems

E. Section 23 0993 - Control Sequences

### 1.2 REFERENCE

A. Work under this Section is subject to requirements of Contract Documents including General Conditions, Supplementary Conditions, and sections under Division 01 General Requirements.

### 1.3 SUBMITTALS

A. Shop Drawings for all items in this Section including, but not limited to, the following:
   1. Manufacturer's name and model number
   2. Identification as referenced in the documents
   3. Type of chiller - principle of operation
   4. Performance data
   5. Sound ratings
   6. General arrangement drawing
   7. Materials of construction
   8. Disassembled unit dimensions
   9. Assembled unit dimensions
   10. Individual component weights
      a. Evaporator (without marine water box)
      b. Condenser (without marine water box)
      c. Marine Water Boxes
      d. Motor
      e. Compressor
      f. Assemble Driveline.
   11. Installed Weight loadings and distribution
      a. Assemble unit and individual leg point loads
      b. Refrigerant Weight
      c. Operating Weight
   12. Required clearances for maintenance and operation, including working clearances for mechanical controls and electrical equipment
   13. Size and location of field connections

14. Structural supports
15. Piping installation requirements.
16. Motor data
17. Medium-Voltage Variable Frequency Drive Data
18. Auxiliary equipment descriptions
19. Details of power and control wiring. Differentiate between manufacturer-installed and field-installed wiring.
20. List and quantification of all utilities required for operation including but not limited to, domestic water, instrument air, electric, etc.
21. Controls description
22. Wiring and interlocking diagrams including, but not limited to, chiller, control panel, starter, cooling towers, pumps, automatic valves, flow switches, etc. Prepare diagram specific to this project. Any incomplete diagrams and shop drawings will be returned without review.
23. BACNET MS/TP object list to the Owner for each chiller.
24. All other appropriate data

B. Provide refrigeration piping drawings prepared for each specific system. Drawings shall indicate location of major equipment, pipe sizes, configuration, lengths, elevations, circuitry of evaporators, and location and capacity data for refrigeration specialties.

C. Provide letter from equipment manufacturer that they have reviewed proposed refrigeration equipment and piping drawings and Construction Documents (including Sections 23 0993 and 23 6000) and certify that proposed system meets design and functional intent of Construction Documents.

D. Maintenance Data: Manufacturer shall submit maintenance/operational manuals, and parts list for each water chiller, control, and accessory; including "trouble-shooting" maintenance guide. Manufacturer shall include current service, and repair and overhaul manuals and include owner on mailing list to receive any published related materials.

## 1.4 QUALITY ASSURANCE

A. Regulatory Requirements
   1. International Mechanical Code as adopted by Kentucky Building Code.
   2. ARI Compliance: Provide certified capacity ratings for water chiller in accordance with Air-Conditioning and Refrigeration Institute (ARI) Standard 550-98. NOTE: Also, exceptions to ARI 550-98 values in selection and testing requirements.
   3. ASHRAE Compliance: Construct refrigerating system of water chiller in accordance with American Society of Heating, Refrigerating, and Air Conditioning Engineers (ASHRAE) Standard ANSI/ASHRAE 15 "Safety Code for Mechanical Refrigeration". Include on the chiller and piping all proposed safety features and/or devices required by ASHRAE for refrigerants declared to be toxic.
   4. ASME Compliance: Construct and test water chiller in accordance with American Society of Mechanical Engineers (ASME) Boiler and Pressure Vessel Code, Section VIII. Chiller must carry the ASME stamp.
   5. Years in Service: The style of chiller being offered shall have been manufactured and in service for a minimum of 4 years.

## 1.5 CERTIFICATES

A. Secure registration and installation permits required by the State and local authorities and complete these requirements before system is placed in operation.

## 1.6 COORDINATION

A. Intent of plans and Specifications is to provide for complete installation meeting all functional and applicable Code requirements including ASHRAE 15 Safety Code Requirements. Design and drawings are based on one of acceptable manufacturers listed in this Specification.

B. Where requirements of equipment provided, differs from equipment on which design is based, this Contractor shall be responsible for coordinating requirements of equipment with other Contractors involved. This Contractor shall be responsible for any additional costs incurred due to such requirements.

C. Equipment manufacturer shall review control sequences specified in Section 23 0993 - Control Sequences and provide all necessary hardware and/or software required for proper operation of the equipment.

D. The chiller manufacturer’s representative shall meet with the contractor and their professional rigging subcontractor and visit the site prior to the arrival of the chiller to determine the best means of rigging the chiller in place. Once the chiller is installed by the contractor, the chiller manufacturer shall provide a factory trained service technician to leak test, test refrigerant pressure, perform evacuation, perform dehydration, charge the chiller with refrigerant, start-up, test and adjust units for proper operation. All activities shall be coordinated with the Contractor.

## 1.7 OPERATION AND MAINTENANCE DATA

A. Manufacturer shall provide for services of factory-trained service engineer to supervise and approve installation; start-up, test and adjust unit for proper operation. After chiller has been thoroughly tested and is running, the factory engineer will provide 24 hours operation based on three 8-hour days for each chiller. The factory service engineer shall log all operating conditions each hour during the 24 hours of operation and submit the logs to the Engineer for his review and approval. The 24 hours will include instructing the Owner's representative and familiarizing the Owner in the correct means of logging all pressures and temperatures in connection with the chiller. The manufacturer's service engineer shall visit the job three (3) times per year during the Warranty period: summer, spring, or fall and winter after acceptance for any adjustments necessary for proper operation. One of the three visits shall be at the start of each cooling season. The manufacturer's representative will have a service engineer close enough to service any breakdown in 24 hours after notification and the number of trips will not be limited during the warranty. Training sessions shall be video recorded and turned over to owner with Operation and Maintenance Manuals..

B. Before acceptance by Owner, manufacturer shall approve, in writing, complete installation, including piping and wiring connections, and proper functioning of all operational and safety controls.

C. Equipment electrical connection points shall be labeled with Listed electrical short circuit current rating (SCCR shall not be less than interrupting rating of upstream overcurrent device as shown on electrical drawings). SCCR shall be marked on equipment control enclosure in accordance with UL508, or other acceptable, accredited third-party testing agency standards.

## 1.8 WARRANTY

A. The manufacturer shall provide a five year parts and labor warranty for the entire compressor assembly. Include coverage for compressor casting, compressor motor, impellers, speed increasing gears, inlet guide vanes, bearings, shafts, shaft seal on open drive designs, motor alignment, gaskets and O-rings, lubrication system, refrigerant and oil containment system, suction elbow and discharge volute. Any refrigerant or oil leaks at the shaft seal shall be repaired at no cost to the Owner. The warranty shall commence upon substantial completion for each chiller.

B. The manufacturer shall provide a one year parts and labor warranty for the complete chiller assembly including structural frame, lubrication system, refrigerant containment system, compressor motor starter, compressor, compressor motor, speed increasing gears, purge (low pressure chiller), pump-out system, condenser and evaporator tube bundles and tubes, control panel, chiller controls and safeties, microprocessor boards, gauges, water boxes, refrigerant relief valves and rupture disks (low pressure chiller). The warranty shall commence upon substantial completion for each chiller.

C. Manufacturer shall stock complete refrigerant charge at factory for 5 years, marked for this chiller. If, at any point during the 5-year period refrigerant is needed for this unit, the refrigerant shall be restocked for the remainder of the 5-year period (no re-stock limit). At the end of 5 years, the refrigerant shall be turned over to the university. Refrigerant loss due to negligence of the owner will0 not be a part of this warranty.

## 1.9 FIVE YEAR MAINTENANCE AGGREEMENT

A. The chiller manufacturer shall include a five-year maintenance agreement for chiller(s). The maintenance agreement shall include a minimum of three, eight (8) hour inspections each year of operation for the chiller(s), by factory maintenance engineer. One of three inspections shall be at the start of each cooling season. Additional the cost for all materials, parts, oil, oil filters, refrigerant, gaskets, shaft seals, O-rings, couplings, etc., for each year maintenance agreement shall be borne by the chiller manufacturer. Each inspection shall include a standardized service and maintenance written report indicating all items checked and serviced. Signed reports shall be submitted to the Owner for review and approval at the end of each inspection. Reports shall note any irregularities in operation of each system and tracked over time in an attempt to predict component replacement and/or downtime.

B. Each year maintenance agreement shall include the following:
   1. Electrical System Check - Operational verification of relays, overload dashpot fluid level, starter 48 contacts, tightening of power wiring, and megohmeter test of compressor motor(s), and overload 49 calibration.
      a. Machine Safety Control Check - Calibration of all unit safety control devices.
   2. Lubrication System Service (after end of first cooling season and each year thereafter) - All oil filter 54 changes, inspection of oil heater, oil cooler, pressure regulator, and heater controls.
   3. Purge Service - Pressurize the purge tank, test the solenoid valves to insure proper sealing, check 3 purge tank sight glass and remove any water if present, lift the purge tank body from the base plate to visually inspect the purge tank coil and all internal parts and clean where necessary, inspect the tank drain valve and line to insure it is free of any debris, replace the tank gasket, and install new filter drier cores, put tank back in place, pressurize, and check for leaks.
   4. Shaft Seal Service - The compressor motor shaft seal(s) of open motor driven chiller shall be tested for refrigerant leaks and oil leaks in the presence of the Owner at each of the specified inspections.

5. Drive Alignment Service - The alignment of open drive chiller and couplings shall be checked at each of the specified inspections.

   Speed Increasing Gear Set Service - The speed increasing gear set shall be checked at each of the specified inspections.
6. Refrigerant Charge Service - The chiller shall be checked for proper refrigerant charge at each of the specified inspections. Refrigerant shall be added as required at no charge to the Owner.
7. Condenser Tube Service - The condenser heads shall be removed at both ends of the chiller. The tubes and tube sheets shall be inspected for fouling.
8. Provide follow-up personnel training during service period.
9. Operator's Log - A review of the operator's logs and the operator's experience with recent operation shall be done at each of the specified inspections to address any concerns.
10. Unit Log - A log of all temperatures, pressures, amperage, and voltage shall be done at each of the specified inspections.
11. The following items shall be done at each of the specified inspections while the chiller is operational:
    a. Adjust operating and safety controls as required and record settings
    b. Complete operating log of temperatures, pressures, voltages, and amperages to determine unit operating efficiency
    c. Check operation of purge system
    d. Check operation of control circuit
    e. Check operation of lubrication system including oil pump and oil pressure regulator. The chiller manufacturer's field supervisor shall submit a written report
    f. Check operation of motor and motor starter
    g. Check customer's log with operator and discuss operation of the chiller(s) in general
    h. Provide chilled water and condenser water analysis and make recommendations on chemical treatment modifications
    i. An ASHRAE Guideline Report shall be reviewed with the Owner at each of the specified inspections by the manufacturer's field supervisor. The report shall be signed by the chiller manufacturer's field supervisor and given to the Owner for his records.
    j. Oil Analysis Service - After the first cooling season, and annually thereafter, an analysis of the oil shall be performed annually measuring acid, moisture, and wear metals content. The manufacturer's field supervisor shall make a review of the laboratory results and a written report shall be submitted
    k. Refrigerant Analysis Service - An analysis of the refrigerant shall be performed annually measuring acid, moisture content, and check for system contamination. The manufacturer's field supervisor shall make a review of the laboratory results and a written report shall be submitted.

## PART 2 - PRODUCTS

### 2.1 REFRIGERATION MACHINES (CENTRIFUGAL TYPE)

A. Manufacturers
   1. York

B. General:

1. Packaged centrifugal refrigeration machine shall be pre-purchased by owner, to be installed in location and orientation as indicated on plans. Refer to schedules and attached submittal for performance information.

## PART 3 - EXECUTION

### 3.1 INSTALLATION

A. Install equipment as shown on drawings, and in accordance with manufacturer's installation instructions.

B. Maintain manufacturer's recommended clearances for service and maintenance, with the exception of tube bundle pull space. Space normally required to pull tube bundle will not be required for this installation. See drawing for additional information.

C. Electrical: Furnish electrical field-wiring diagrams to Design Engineer, in AutoCAD format, for power wiring to water chiller, purge/pump out system, oil pump (and any other field wired components) and control wiring for field-mounted controls. Wiring work is not a part of this section. Any items not turned over or coordinated with the engineer shall be field wired at the manufactures cost.

1. Chiller Manufacturer shall coordinate lug arrangement, quantities, and sizes with installing contractor. Provide terminal box with adequate space for cable entry and terminations.

D. Install all necessary auxiliary water piping, pneumatic control tubing, control devices, and drain and vent piping as shown and required by units.

E. Install necessary piping with insulation for lubricating system cooler if required.

F. Pipe refrigerant relief devices to building exterior. Discharge pipe shall not be less than relief device outlet size. Discharge from more than one relief device per refrigeration machine may be combined into a common header, provided cross-sectional area of common header is at least sum of the cross-sectional areas of the connected pipes. When length of discharge piping exceeds 50 ft, piping shall be increased one pipe size.

### 3.2 VIBRATION TEST

A. Vibration shall be measured on site by independent third-party testing agency obtained by cooling tower manufacturer. Submit name of third party testing agency to Owner for review and comments. Measured vibration shall not be more than the following:

| Fan Speed (rpm) | Maximum Vibration Displacement | Maximum Vibration Velocity |
|---|---|---|
| 100 - 200 | 10.0 mils | 0.080”/sec. |
| 200 - 300 | 6.0 mils | 0.080”/sec. |
| 300 - 400 | 4.0 mils | 0.080”/sec. |

REFRIGERATION MACHINE DATA SHEET

**General**

- Project _____
- Identification _____
- Manufacturer _____
- Model Number _____
- Nominal Size _____
- Unit Length _____
- Unit Height _____
- Unit Width _____
- Shipping Weight _____
- Operating Weight _____
- Refrigerant Charge (lb.) _____
- Refrigerant Type _____
- Marine Water Boxes _____

**Performance**

- **kW/ton** of Refrigeration _____
- **kW/ton** (Full load) _____
- **kW/ton** (IPLV value) _____
- Evaporator Fluid Flow _____
- Evaporator Fluid Type _____
- Evaporator EWT _____
- Evaporator LWT _____
- Evaporator Pressure Drop _____
- Evaporator Fouling Factor _____
- Evaporator Passes _____
- Condenser Fluid Flow _____
- Condenser Fluid Type _____
- Condenser EWT _____
- Condenser LWT _____
- Condenser Pressure Drop _____
- Condenser Fouling Factor _____
- Condenser Passes _____
- Sound Pressure Level _____

**Motor Data**

- Actual KW (Full load) _____
- Voltage _____
- Amps _____
- Service Factor _____
- Nominal Efficiency _____
- Nominal Power Factor _____
- Motor Type _____
- Enclosure Type _____
- Frame Type _____

**Starter Data**

- Manufacturer _____
- Type _____

REFER TO APPENDIX-
Submittal Package :
23 6000 CHILLER - Approved as Noted dated 2017.04.03

# Review Comments

APPENDIX to Section 23 6000 PRIMARY COOLING

**Affiliated Engineers, Inc.**

10 S. LaSalle Street
Chicago, IL 60603
Tel 312.977.2800 • Fax 312.977.2801

| | |
|---|---|
| University of Kentucky – Research Building 2 Spline Infrastructure 2425.4 | 15576-02 |
| Project Name | Project Number |
| Chiller | 2017.04.03 |
| Description | Date |
| 23 6000 | |
| Submittal Identification Number | |
| Chris Augustyn | 1 of 1 |
| Reviewer | Page |

**Action:**

- ☐ Approved as Submitted
- ☒ Approved as Noted (Refer to Individual Items Below)
  - ☒ Resubmittal Not Required
  - ☐ Resubmit Noted Portions Only
  - ☐ Resubmit
- ☐ Not Approved
- ☐ Reviewed Only/No Approval Action Required
- ☐ Review Not Required by Contract Documents
- ☐ Other

Reviewed only for general conformance with design concept and information given in the Contract Documents. Corrections or comments made by reviewer on the submittal do not relieve the contractor from compliance with of the Contract Documents. Approval of a specific item shall not infer approval of an assembly of which the item is a component. The contractor is responsible for all dimensions, field conditions, coordination with other trades, and information that pertains solely to the fabrication process.

**Comments:**

1. Page 1 of 7 "YK MAXE Chiller UK-PAV A Chiller" – "…submersible 2 HP oil pump and 3000 watt oil heater". Per discussion with JCI, rep the pump/heater has a 480v feed comes from the drive, however this a floor mounted VFD so all that wiring needs to be done in the field.
2. Page 3 of 7 "YK MAXE Chiller UK-PAV A Chiller" – "When needed Hot Gas Bypass in available as an option". Per discussion with JCI rep, Hot Gas Bypass is not included.
3. Page 5 of 7 "YK MAXE Chiller UK-PAV A Chiller" – Factory Performance Testing is notes. Contractor to coordinate with JCI to determine if factory testing is preferred by Owner.

Johnson Controls Inc
9410 Bunsen Parkway
Louisville, KY 40220
Tel. 502-493-2149
FAX 502-499-6210

# TRANSMITTAL LETTER

| | | | |
|---|---|---|---|
| TO: | Mr. Bob Williams | Date: | March 24, 2017 |
| | University of Kentucky | Project Name: | UK PAV-A Chiller - CH-2 |
| | 411 S Limestone Street, | Project #: | UK-1567-15 2500 TR Chiller |
| | Lexington, KY 40506 | Customer PO#: | 7500103153 |

**We are sending you:** ☒ **Enclosed/Attached** ☐ **Under Separate Cover**

| | | |
|---|---|---|
| ☒ Shop Drawings | ☒ Product Data Sheets | ☐ Copy of Letter |
| ☐ Plans | ☐ Copy of Letter | ☒ Submittals |
| ☒ Specifications | ☐ Samples | ☐ Operations & Maint. Manuals |
| ☐ Damper Schedules | ☐ Room Schedules | ☐ Device Schedules |
| ☐ Valve Schedules | ☐ Door Schedules | ☐ |

**This material/information is being sent:**

| | | |
|---|---|---|
| ☐ Per your Request. | ☐ For your Record and File | ☐ For Correction & Resubmittal. |
| ☒ For your Review and Approval. | ☐ Approved as Submitted. | ☐ For issue to Subcontractors. |
| ☐ For your Review and Comment. | ☐ Approved as Noted. | ☐ Final Distributions |
| ☐ | ☐ | ☐ |

**We have detailed these Submittals based on our interpretation of the contract drawings & specifications**

☒ Return 1 Approved Copy
☒ Fabrication Held for Approval & Written Release
☐ Equipment is being fabricated and any changes may create a delay in shipment and a possible increase in price.

**Please have your detailing department look carefully at the attached submittals. We cannot be held responsible for any cost or lead time changes incurred for modifications once the equipment has been released for fabrication.**

| Item | Description / Comments | Document # / Ref | Rev | # of Sets |
|---|---|---|---|---|
| 1 | SECTION 15700 - PRE-PURCHASED WATER CHILLER | CH-2 | 1 | Digital |
| 2 | | | | |
| 3 | | | | |
| 4 | | | | |
| 5 | | | | |
| 6 | | | | |
| 7 | | | | |
| 8 | | | | |

**Message/Comments:**

Delivered by: Warren Grobbelaar Date: 3/24/17

Received by: Date: 3/24/17

| CC to: | # of Copies |
|---|---|
| | |
| | |

**TRANSMITTED BY:**
**Sam Garcia Jr.**

FORM 160.75-EG1 (914)

# MODEL YK CENTRIFUGAL LIQUID CHILLERS STYLE G

250 THROUGH 3000 TONS
(879 through 10,500 kW)
Utilizing HFC-134a

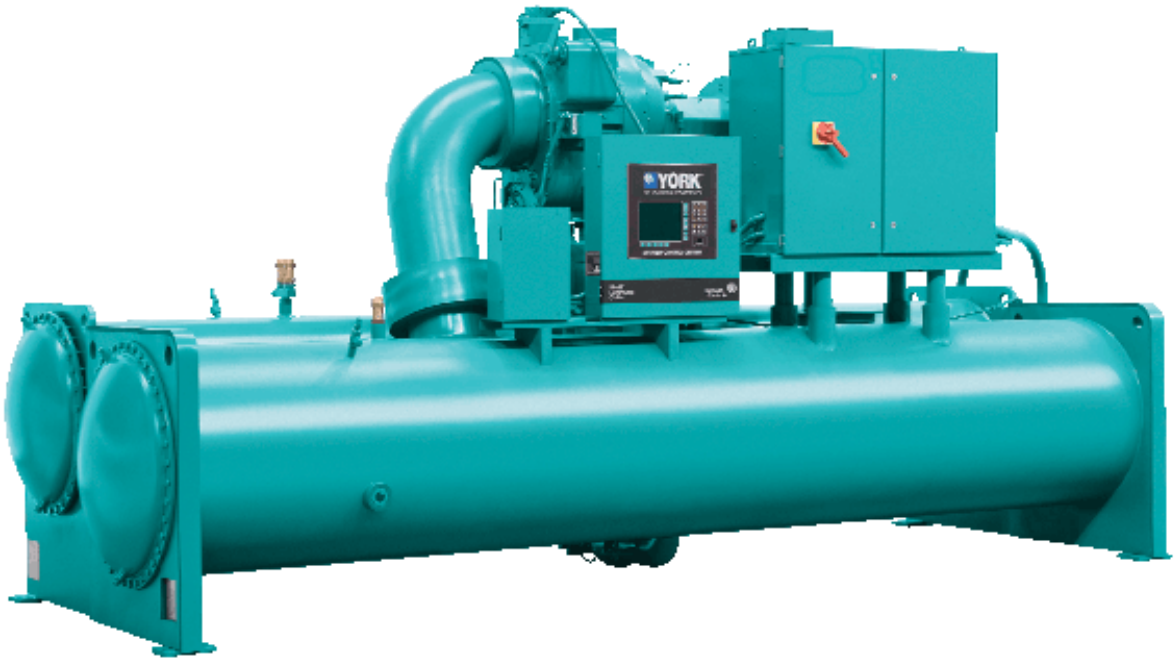


YORK®
BY JOHNSON CONTROLS

| YORK BY JOHNSON CONTROLS | MEDIUM VOLTAGE VARIABLE SPEED DRIVE | |
|---|---|---|
| **INSTALLATION** | NEW RELEASE | Form 160.00-N6 (311) |

# MEDIUM VOLTAGE 500-2500 HP, 2300V, 3300V, 4160V & 6600V, 60HZ 3300V & 6600V 50HZ VARIABLE SPEED DRIVES for YK CHILLER APPLICATIONS

LD12421

Issue Date:
March 11, 2011

## GENERAL

Furnish YORK MaxE Centrifugal Liquid Chilling-Unit(s) as indicated on the drawings.

Each unit shall produce a capacity of 2518 tons, cooling 4110 gpm of WATER from 54.65 to 40.00 °F when supplied with 7707 gpm of condenser water at 85.00°F. Power input shall not exceed 1452 KW with an NPLV of 0.383. The cooler shall be selected for 0.00010 fouling factor and a maximum liquid pressure drop of 26.6 ft. Water side shall be designed for 300 psig working pressure. The condenser shall be selected for 0.00025 fouling factor and maximum liquid pressure drop of 7.9 ft. Water side shall be designed for 150 psig working pressure. Power shall be supplied to the compressor motor at 4160 volts – 3 phase - 60 Hertz and controls at 115 volts – 1-phase - 60 Hertz. The chiller shall use R-134A.

Each unit will be completely factory-packaged including evaporator, condenser, sub-cooler, compressor, open motor, lubrication system, Optiview control center, and all interconnecting unit piping and wiring. The chiller will be painted prior to shipment.

Ratings outside the scope of AHRI Standard 550/590. Only chillers that are listed in the AHRI Certification Program for Centrifugal and Rotary Screw Water Chillers are acceptable.

The initial charge of refrigerant and oil will be supplied, shipped in containers and cylinders for field installation or factory charged in the chiller.

## COMPRESSOR

The compressor will be a single-stage centrifugal type powered by an open-drive electric motor. The housing will be fully accessible with vertical circular joints, with the complete operating assembly removable from the compressor and scroll housing. Compressor castings will be designed for 235 psig working pressure and hydrostatically pressure tested at 355 psig for R-134A units. The rotor assembly will consist of a heat-treated alloy steel drive shaft and impeller shaft with a cast aluminum, fully shrouded impeller. The impeller will be designed for balanced thrust, dynamically balanced and overspeed tested for smooth, vibration-free operation. Insert-type journal and thrust bearings will be fabricated of aluminum alloy, precision bored and axially grooved.

Internal single helical gears with crowned teeth will be designed so that more than one tooth is in contact at all times to provide even load distribution and quiet operation. Each gear will be individually mounted in its own journal and thrust bearings to isolate it from impeller and motor forces. Shaft seal shall be provided in double bellows, double-seal, cartridge type. A gravity-fed oil reservoir will be built into the top of the compressor to provide lubrication during coastdown in the event of a power failure.

Capacity control will be achieved by use of prerotation vanes to provide fully modulating control from maximum to minimum load. The unit will be capable of operating with lower temperature cooling tower water during part-load operation in accordance with AHRI Standard 550/590. Prerotation vane position will be automatically controlled by an external electric actuator to maintain constant leaving chilled water temperature.

## LUBRICATION SYSTEM

Lubrication oil shall be force-fed to all compressor bearings, gears, and rotating surfaces by an external variable speed oil pump. The oil pump shall vary oil flow to the compressor based on operating and stand-by conditions, ensuring adequate lubrication at all times. The oil pump shall operate prior to start-up, during compressor operation and during coastdown. Compressor shall have an auxiliary reservoir to provide lubrication during coastdown in the event of a power failure.

An oil reservoir, separate from the compressor, shall contain the submersible 2 HP oil pump and a 3000 watt oil heater, thermostatically controlled to remove refrigerant from the oil. The oil reservoir shall be designed in accordance with applicable pressure vessel code and listed as part of the chiller by a nationally recognized testing laboratory.

Oil shall be filtered by an externally mounted ½ micron replaceable cartridge oil filter equipped with service valves. Oil cooling shall be done via a refrigerant cooled oil cooler, with all piping factory installed. Oil side of the oil cooler shall be provided with service valves. An automatic oil return system to recover any oil that may have migrated to the evaporator shall be provided. Oil piping shall be completely factory installed and tested.

**MOTOR DRIVELINE**

The compressor motor will be an open drip-proof, squirrel cage, induction type operating at 3570 RPM.

The open motor shall be provided with a D-flange, bolted to a cast iron adapter mounted on the compressor to allow the motor to be rigidly coupled to the compressor to provide factory alignment of motor and compressor shafts.

Motor drive shaft will be directly connected to the compressor shaft with a flexible disc coupling. Coupling will have all metal construction with no wearing parts to assure long life, and no lubrication requirements to provide low maintenance.

For units utilizing remote electro-mechanical starters, a large steel terminal box with gasketed front access cover will be provided for field connected conduit. Overload/overcurrent transformers will be furnished with all units. (For units furnished with factory packaged Solid State Starters, refer to the options section.)

**EVAPORATOR**

Evaporator will be of the shell-and-tube, flooded type designed for 180 psig working pressure on the refrigerant side. Shell will be fabricated from rolled carbon steel plate with fusion welded seams; have carbon steel tube sheets, drilled and reamed to accommodate the tubes; and intermediate tube supports spaced no more than four feet apart. The refrigerant side will be designed, tested and stamped in accordance with ASME Boiler and Pressure Vessel Code, Section VIII- Division 1 . Tubes shall be high-efficiency, internally and externally enhanced type having plain copper lands at all intermediate tube supports to provide maximum tube wall thickness at the support area. Each tube will be roller expanded into the tube sheets providing a leak-proof seal, and be individually replaceable. Water velocity through the tubes will not exceed 12 fps. Two liquid level sight glasses will be located on the side of the shell to aid in determining proper refrigerant charge. Aluminum mesh eliminators will be located above the tube bundle to prevent liquid refrigerant carryover to the compressor. The evaporator will have a refrigerant relief device sized to meet the requirements of ASHRAE 15 Safety Code for Mechanical Refrigeration.

Water boxes and cover plates will be removable to permit tube cleaning and replacement. Stubout water connections having flanged connection will be provided. Vent and drain connections with plugs will be provided on each water box.

**CONDENSER**

Condenser will be of the shell-and-tube type, designed for 235 psig working pressure on the refrigerant side. Shell will be fabricated from rolled carbon steel plate with fusion welded seams; have carbon steel tube sheets, drilled and reamed to accommodate the tubes; and intermediate tube supports spaced no more than four feet apart. The refrigerant side will be designed, tested and stamped in accordance with ASME Boiler and Pressure Vessel Code, Section VIII- Division 1. Tubes shall be high-efficiency, internally and externally enhanced type having plain copper lands at all intermediate tube supports to provide maximum tube wall thickness at the support area. Each tube will be roller expanded into the tube sheets providing a leak-proof seal, and be individually replaceable. Water velocity through the tubes will not exceed 12 fps.

Water boxes and cover plates will be removable to permit tube cleaning and replacement. Stubout water connections having victaulic grooves will be provided. Vent and drain connections with plugs will be provided on each water box.

**REFRIGERANT FLOW CONTROL**

Refrigerant flow to the evaporator will be controlled by a variable orifice for improving unloading capabilities.

**GRAPHIC CONTROL CENTER**

**General:** The chiller shall be controlled by a stand-alone microprocessor based control center. The chiller control panel shall provide control of chiller operation and monitoring of chiller sensors, actuators, relays and switches.

**Control panel:** The control panel shall include a 10.4 in. diagonal color liquid crystal display (LCD) surrounded by “soft” keys which are redefined based on the screen displayed at that time. This shall be mounted in the middle of a keypad interface and installed in a locked enclosure. The screen shall detail all operations and parameters, using a graphical representation of the chiller and its major components. Panel verbiage shall be available in other languages as an option with English always available. Data shall be displayed in either English or Metric units. Smart Freeze Point

Protection shall run the chiller at 36.00°F leaving chilled water temperature, and not have nuisance trips on low water temperature. The sophisticated program and sensor shall monitor the chiller water temperature to prevent freeze up. When needed Hot Gas Bypass is available as an option. The panel shall display countdown timer messages so the operator knows when functions are starting and stopping. Every programmable point shall have a pop-up screen with the allowable ranges, so that the chiller can not be programmed to operate outside of its design limits.

The chiller control panel shall also provide:

1. System operating information including:
    a. return and leaving chilled water temperature
    b. return and leaving condenser water temperature
    c. evaporator and condenser saturation temperature
    d. differential oil pressure
    e. percent motor current
    f. evaporator and condenser pressure
    g. compressor discharge temperature
    h. oil reservoir temperature
    i. compressor thrust bearing positioning and oil temperature
    j. operating hours
    k. number of compressor starts

2. Digital programming of setpoints through the universal keypad including:
    a. leaving chilled water temperature
    b. percent current limit
    c. pull-down demand limiting
    d. six-week schedule for starting and stopping the chiller, pumps and tower
    e. remote reset temperature range

3. Status messages indicating:
    a. system ready to start
    b. system running
    c. system coastdown
    d. system safety shutdown-manual restart
    e. system cycling shutdown-auto restart
    f. system prelube
    g. start inhibit

4. The text displayed within the system status and system details field shall be displayed as a color coded message to indicate severity: red for safety fault, orange for cycling faults, yellow for warnings, and green for normal messages.

5. Safety shutdowns enunciated through the display and the status bar, and consist of system status, system details, day, time, cause of shutdown, and type of restart required. Safety shutdowns with a fixed speed drive shall include:
    a. evaporator – low pressure
    b. evaporator – transducer or leaving liquid probe
    c. evaporator – transducer or temperature sensor
    d. condenser – high pressure contacts open
    e. condenser – high pressure
    f. condenser – pressure transducer out of range
    g. auxiliary safety – contacts closed
    h. discharge – high temperature

i. discharge – low temperature
j. oil – high temperature
k. oil – low differential pressure
l. oil – high differential pressure
m. oil – sump pressure transducer out of range
n. oil – differential pressure calibration
o. oil – variable speed pump – pressure setpoint not achieved
p. control panel – power failure
q. motor or starter – current imbalance
r. thrust bearing – proximity probe clearance
s. thrust bearing - proximity probe out – of – range
t. thrust bearing – high oil temperature
u. thrust bearing – oil temperature sensor
v. watchdog – software reboot

5.1 Safety shutdowns with a VSD Shall include:
a. VSD shutdown – requesting fault data
b. VSD – stop contacts open
c. VSD – 105% motor current overload
d. VSD – high phase A, B,C inverter heatsink temp.
e. VSD – high converter heatsink temperature

6. Cycling shutdowns enunciated through the display and the status bar, and consists of system status, system details, day, time, cause of shutdown, and type of restart required. Cycling shutdowns with a fixed speed drive shall include:
a. multiunit cycling – contacts open
b. system cycling - contacts open
c. oil - low temperature differential
d. oil – low temperature
e. control panel - power failure
f. leaving chilled liquid - low temperature
g. leaving chilled liquid - flow switch open
h. motor controller – contacts open
i. motor controller – loss of current
j. power fault
k. control panel - schedule
l. starter – low supply line voltage
m. starter – high supply line voltage
n. proximity probe – low supply voltage
o. oil - variable speed pump - drive contacts open

6.1 Cycling shutdowns with a VSD shall include:
a. VSD shutdown – requesting fault data
b. VSD – stop contacts open
c. VSD initialization failed
d. VSD - high phase A,B,C instantaneous current
e. VSD – phase A,B,C gate driver
f. VSD – single phase input power
g. VSD – high DC bus voltage
h. VSD – pre charge DC bus voltage imbalance
i. VSD – high internal ambient temperature
j. VSD – invalid current scale selection

k. VSD – low phase A, B, C inverter heatsink temp.
l. VSD – low converter heatsink temperature
m. VSD – pre-charge - low DC bus voltage
n. VSD – logic board processor
o. VSD – run signal
p. VSD – serial communications

7. Security access to prevent unauthorized change of setpoints, to allow local or remote control of the chiller, and to allow manual operation of the prerotation vanes and oil pump. Access shall be through ID and password recognition, which is defined by three different levels of user competence: view, operator, and service.

8. Trending data with the ability to customize points of once every second to once every hour. The panel shall trend up to 6 different parameters from a list of over 140, without the need of an external monitoring system.

9. The operating program stored in non-volatile memory (EPROM) to eliminate reprogramming the chiller due to AC power failure or battery discharge. Programmed setpoints shall be retained in lithium battery-backed RTC memory for a minimum of 11 years with power removed from the system.

10. A fused connection through a transformer in the compressor motor starter to provide individual over-current protected power for all controls.

11. A numbered terminal strip for all required field interlock wiring.

12. An RS-232 port to output all system operating data, shutdown / cycling message, and a record of the last 10 cycling or safety shutdowns to a field-supplied printer. Data logs to a printer at a set programmable interval. This data can be preprogrammed to print from 1minute to 1day.

13. The capability to interface with a building automation system to provide:
    a. remote chiller start and stop
    b. remote leaving chiller liquid temperature adjust
    c. remote current limit setpoint adjust
    d. remote ready to start contacts
    e. safety shutdown contacts
    f. cycling shutdown contacts
    g. run contacts

**STARTUP AND OPERATOR TRAINING**

The services of a factory trained, field service representative will be provided to supervise the final leak testing, charging and the initial startup and conduct concurrent operator instruction.

**FACTORY INSULATION**

Factory-applied, anti-sweat insulation will be attached to the cooler shell, flow chamber, tube sheets, suction connection, and (as necessary) to the auxiliary tubing. The insulation will be a flexible, closed-cell plastic type, 1 1/2 inches thick, applied with vapor-proof cement. The insulation will normally prevent sweating in environments with relative humidities up to 90% and dry bulb temperatures ranging from 50 to 90 °F.

**FACTORY PERFORMANCE TESTING**

A factory performance test will be performed in accordance with the most recent ARI Standard. This is a test to demonstrate submitted unit performance.

**ISOLATION MOUNTING**
Included with the unit are 8 vibration isolation mounts, consisting of 1" thick neoprene isolation pads, for field mounting. The pads are to be mounted under the steel mounting pads on the tube sheets. Suitable for ground floor installation.

**SHIPMENT FORM #2**
The unit shall be completely assembled, with all main, auxiliary and control piping installed, controls wired, leak and air run test completed, and charged with dry nitrogen (2 to 3 psig). The oil charge and miscellaneous materials shall be packed separately. The refrigerant charge shall be shipped concurrently or separately in cylinders for field evacuation and charging of unit.

**COMPRESSOR MOTOR STARTER**
The Variable Speed Drive will be remote floor mounted. It will vary the compressor motor speed by controlling the frequency and voltage of the electrical power to the motor. The adaptive capacity control logic shall automatically adjust motor speed and compressor pre-rotation vane position independently for maximum part-load efficiency by analyzing information fed to it by sensors located throughout the chiller.

Drive will be PWM type utilizing IGBT's with a power factor of 0.95 or better at all loads and speeds.

The variable speed drive will contain two control power transformers, a 115V single phase nominal 2.0KVA transformer will be supplied for the Optiview Control Center and a 460v three phase 60Hz up to 3KVA transformer will be supplied for chiller oil pump operation.

The following features will be provided:

Door interlocked circuit breaker capable of being padlocked.
UL listed ground fault protection.
Over voltage and under voltage protection.
3-phase sensing motor over current protection.
Single phase protection.
Insensitive to phase rotation.
Over temperature protection.
Digital readout at the chiller unit control panel of output frequency, output voltage, 3-phase output current, input Kilowatts and Kilowatt-hours, self-diagnostic service parameters. Separate meters for this information will not be acceptable.

KW Meter - The unit's input power consumption will be measured and displayed digitally via the unit's control panel. The KW meter accuracy is typically +/- 3% of reading. KW meter scale is 0 - 788 KW .

KWh Meter – The unit's cumulative input power consumption is measured and displayed digitally via the unit's control panel. The KWh meter is resetable and it's accuracy is typically +/- 3% of reading. KWh meter scale is 0 – 999,999 kWh.

Ammeter – Simultaneous three-phase true RMS digital readout via the unit control panel. Three current transformers provide isolated sensing. The ammeter accuracy is typically +/- 3% of readming. Ammeter scale is 0 - 545 A RMS .

Voltmeter – Simultaneous three-phase true RMS digital readout via the unit control panel. The voltmeter accuracy is typically +/- 3% of reading. Voltmeter scale is 0 – 670 VAC.

Elapsed Time Meter – Digital readout of the unit's elapsed running time (0 – 876,600 hours, resetable) is displayed via the unit control panel.

A 24 pulse input transformer filter that limits electrical power supply distortion for the variable speed drive to comply with the guidelines of IEEE Std. 519-1992 will be provided. The transformer will be mounted within the same NEMA-1 enclosure and will be UL listed. The following digital readouts shall be provided at the chiller unit control panel as part of the package; input KVA, total power factor, 3 phase input voltage, 3 phase input current, self diagnostic service parameters. Separate meters for this information will not be acceptable.

# SPECIAL QUOTE SUMMARY

| Unit Tag | Quantity | Capacity (TR) |
|---|---|---|
| CH-2 | 1 | 2,518.0 |

**Unit PIN**

YKWTWSK7-
DJGSMUYPB5VVB2518598383CRARS3MEFXXW00XG1MFGBDW00XXXXXXA1XAUNXXXXXQSMXYXXBBXAXXBXXXQQWXXFXXKXEJXSX XXXX

| Unit Tag | Quantity | Capacity (TR) |
|---|---|---|
| CH-2 | 1 | 2,518.0 |
| **SQ Drawings** | | |


| Unit Tag | Quantity | Capacity (TR) |
|---|---|---|
| CH-2 | 1 | 2,518.0 |
| **SQ Drawings** | | |


| Unit Tag | Quantity | Capacity (TR) |
|---|---|---|
| CH-2 | 1 | 2,518.0 |
| **SQ Drawings** | | |
| Unit Drawing None | Electrical Drawing None | |

| PIN Location(s) | SQ Number | SQ Weight (lbs) | Expiration Date | AE Approved |
|---|---|---|---|---|
| 92, 93 | SQ - TBD | 0.0 | | Yes |
| 75 | SQ - TBD | 0.0 | | Yes |

| PIN Location(s) | SQ Number | SQ Resolution $ MLP/Unit |
|---|---|---|
| 92, 93 | SQ - TBD | VIBRATION level and report during witnessed factory performance test at 100% only:<br>Includes vibration analysis testing at full load during factory performance testing at customer design conditions. Vibration measurements shall be taken vertical, horizontal, and axial on the driveline assembly. Total of nine ( 9 ) data points shall be established on driveline. Report to be generated by JCI Predictive Diagnostics Service Team. Report shall contain highest level of primary diagnostic frequencies observed on driveline and major components. Report shall validate acceptable run levels in order to provide the customer with baseline reference point for future diagnostic analysis. All diagnostic reporting shall be permanently stored in Milwaukee database for easy accessibility for future analysis. |
| 75 | SQ - TBD | Paint chiller, using manufacturer's standard procedures, except comply with the following minimum requirements:<br>1. Provide at least one coat of spray (conventional or airless), enamel primer.<br>2. Spray (conventional or airless), enamel finish with a total dry film thickness of at least 1 mils. One coat of the conventional Wildcat Univ. of Kentucky Blue.<br><br>MUST include the following in your FOF order: Following ESG acceptance of the paint, field sales shall furnish the following application data specifically related to the powder for the color:<br>(a) Color and/or Munsell Number<br>(b) Supplier's Formula Number<br>(c) Flash Point<br>(d) Gloss<br>(e) Specific Gravity<br>(f) Curing Schedule<br>(g) APPROVED SOURCES OF SUPPLY: Rohm & Haas; Farboil Co.; DuPont OR Titan. MUST be one of these manufacturers. |

| | | | |
|---|---|---|---|
| Project Name: | UK-PAV A Chiller | York Contract No.: | |
| Unit Folder: | YK-VSD | Last Modified Date: | |




| Unit Tag | Quantity | Capacity (TR) |
|---|---|---|
| CH-2 | 1 | 2,518.0 |
| **SQ Drawings** | | |

# YK MAXE CHILLER
# PERFORMANCE SPECIFICATION

| Unit Tag | Qty | Model No. | Net Capacity (tons) | Power | Refrigerant |
|---|---|---|---|---|---|
| CH-2 | 1 | YKWTWSK7-DJGS | 2518 | 4160/3/60 | R-134A |

**PIN**

YKWTWSK7-DJGSMUYPB5VVB2518598383CRARS3MEFXXW00XG1MFGBDW00XXXXXXA1XAUNXXXXXQSMXYXXBBXAXXBXXXQQWXXFXXKXEJXSXXXXX

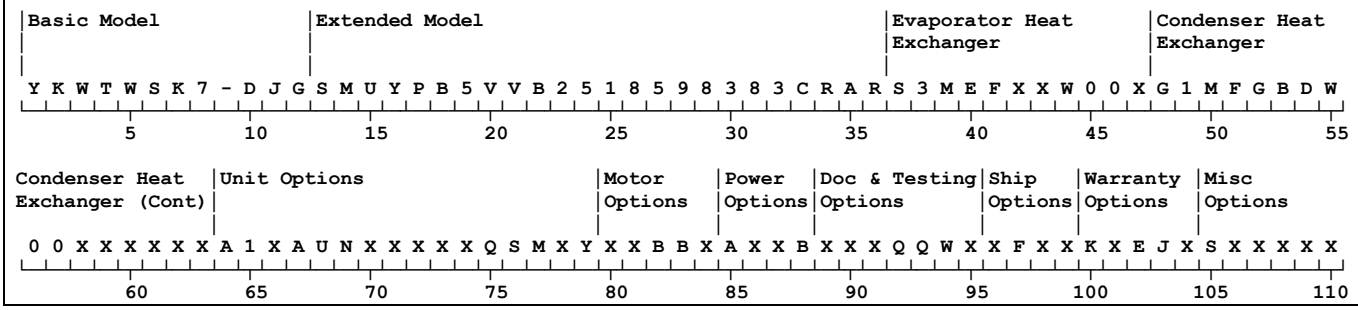


| Unit Data | Evaporator | Condenser |
|---|---|---|
| EWT (°F): | 54.65 | 85.00 |
| LWT (°F): | 40.00 | 94.09 |
| Flow Rate (gpm): | 4110 | 7707 |
| Pressure Drop (ft): | 26.6 | 7.9 |
| Fluid Type (%): | WATER | WATER |
| Circuit No. of Passes: | 2 | 1 |
| Fouling Factor (ft² °F hr / Btu): | 0.00010 | 0.00025 |
| Tube No. / Description: | 372 - 0.028" Turbo-ESP Copper (3/4") | 262 - 0.035" CSL Enhanced Copper |
| Design Working Pressure (psig): | 300 | 150 |
| Entering Water Nozzle @ Location: | 7 | 11 |
| Leaving Water Nozzle @ Location: | 8 | 16 |
| Water Box Weight, ea (lb)(1): | 2427* | 1224 |
| Cover Plate Weight , ea (lb): | 3104 | 1800 |
| Return Head Weight (lb): | 1069 | N/A |
| Water Weight (lb): | 8194 | 10785 |
| Water Volume(gal): | 984 | 1295 |

| Performance Data | | Electrical Data | | Other | |
|---|---|---|---|---|---|
| Job KW: | 1507 | Job FLA: | 227 | Operating Wt. (lb): | 122817 |
| Motor KW: | 1452 | Motor FLA: | 226 | Per Isolator (lb): | 15352 |
| KW/Ton: | 0.598 | LRA: | 1736 | Refrigerant Wt. (lb): | 6895 |
| NPLV: | 0.383 | | | Oil Charge (gal): | 20 |
| Gear Code: | MU | Min Circuit Ampacity (Amps): | 284 | Motor Wt. (lb): | 8500 |
| OptiSound Cntrl: | YES | Max Fuse/Breaker: | 500 | Compressor Wt. (lb): | 9100 |
| Shaft HP: | 1870 | | | Starter Wt. (lb): | N/A |
| Isolation Valves: | YES | | | Ship Wt (lb): | 96943 |
| Oil Cooler Type: | Standard | | | | |
| Condenser Inlet: | Standard | | | | |
| | | Type Starter: Variable Speed Drive | | | |

YORK
BY JOHNSON CONTROLS

**Project:**
**Engineer:**
**Customer:**

**Rating Program:** LTC v1_141.idd
**Software Version:** YW 15.01
**Date:**

## SALES REPORT

| Unit Specifications | | | |
|---|---|---|---|
| **Model** | YKWTWSK7-DJG | **Refrigerant** | R134A |
| **Rated Net Capacity (Tons)** | 2518 | **Refrigerant Charge (lb)** | 6895 |
| **Specified Net Capacity (Tons)** | 2518 | **A-Weighted SPL (dBA)** | 85 |
| **Full Load (kW/Ton)** | 0.598 | **NPLV (kW/Ton)** | 0.383 |
| **Input Power (kW)** | 1507 | **Max Motor Load (kW)** | 1516 |
| **Voltage / Hz** | 4160 / 60 | **Gear Code** | MU |
| **FLA (Amps)** | 227 | **OptiSound Control** | Y |
| **LRA (Amps)** | 1736 | **Isolation Valve** | Y |
| | | **Variable Orifice** | VALVE:5 |
| **Min Circuit Ampacity** | 284 | **Max Circuit Breaker Amps** | 500 |
| **Condenser Gas Inlet Type** | Baffle | **Oil Cooler** | Refrig clr |
| **Starter Type** | VSD w/ Filter | | |

| | Evaporator | Condenser |
|---|---|---|
| **Fluid** | WATER* | WATER* |
| **Tube MTI No.** | 372* | 262* / 262 |
| **Passes** | 2* | 1* |
| **Fouling Factor (hr-ft²-°F/Btu)** | 0.00010* | 0.00025* |
| **Entering Fluid Temp (°F)** | 54.65 | 85.00* |
| **Leaving Fluid Temp (°F)** | 40.00* | 94.09 |
| **Fluid Flow (gpm)** | 4110.4* | 7707.0* |
| **Fluid Pressure Drop (ft)** | 26.6 | 7.9 |

(*) Designates User Specified Input

Certified in accordance with the AHRI Water-Cooled Water Chilling Packages Using Vapor Compression Cycle Certification Program, which is based on AHRI Standard 550/590 (IP) and AHRI Standard 551/591 (SI). Certified units may be found in the AHRI Directory at www.ahridirectory.org.
Compliant with ASHRAE 90.1 - 2004.
Compliant with ASHRAE 90.1 - 2007.
Compliant with ASHRAE 90.1 - 2010.
Compliant with the requirements of the LEED Energy and Atmosphere Enhanced Refrigerant Management Credit (EAc4).
Materials and construction per mechanical specifications - Form 160.75-EG1.
Auxiliary components included in total KW - oil pump & heater, chiller controls.

YORK
BY JOHNSON CONTROLS

**Project:**
**Engineer:**
**Customer:**

**Rating Program:** LTC v1_141.idd
**Software Version:** YW 15.01
**Date:**

| Partload Data (Factory Test) | | | | | | | | |
|---|---|---|---|---|---|---|---|---|
| % Load | Net Capacity (Tons) | % Power | Input Power (kW) | EEFT (°F) | ELFT (°F) | CEFT (°F) | CLFT (°F) | kW/Ton |
| 100 | 2518 | 100 | 1507.0 | 54.65 | 40.00 | 85.00 | 94.09 | 0.598 |
| 77 | 1927 | 58 | 867.0 | 51.20 | 40.00 | 75.00 | 81.71 | 0.450 |
| 51 | 1285 | 28 | 423.0 | 47.47 | 40.00 | 65.00 | 69.33 | 0.329 |
| 26 | 642 | 17 | 258.0 | 43.73 | 40.00 | 65.00 | 67.18 | 0.402 |
| 15 | 385 | 9 | 130.0 | 42.24 | 40.00 | 55.00 | 56.28 | 0.337 |
| 102 | 2569 | 53 | 802.0 | 54.95 | 40.00 | 55.00 | 63.62 | 0.312 |

Certified in accordance with the AHRI Water-Cooled Water Chilling Packages Using Vapor Compression Cycle Certification Program, which is based on AHRI Standard 550/590 (IP) and AHRI Standard 551/591 (SI). Certified units may be found in the AHRI Directory at www.ahridirectory.org.
Compliant with ASHRAE 90.1 - 2004.
Compliant with ASHRAE 90.1 - 2007.
Compliant with ASHRAE 90.1 - 2010.
Compliant with the requirements of the LEED Energy and Atmosphere Enhanced Refrigerant Management Credit (EAc4).
Materials and construction per mechanical specifications - Form 160.75-EG1.
Auxiliary components included in total KW - oil pump & heater, chiller controls.

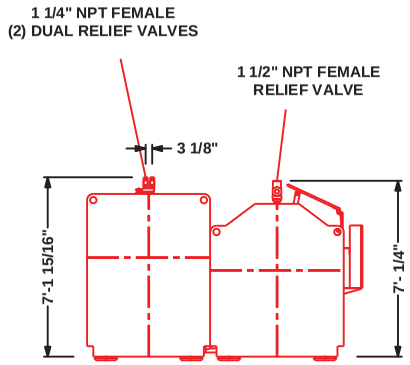


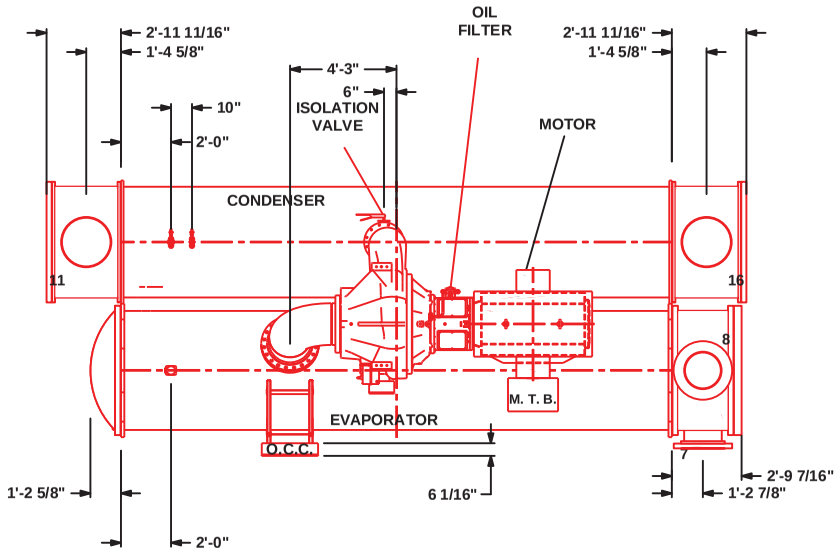


NOZZLE LEGEND

EVAPORATOR INLET "7" 2 PASS 18 DIA. (300 Psig DWP)
EVAPORATOR OUTLET "8" 2 PASS 18 DIA. (300 Psig DWP)
CONDENSER INLET "11" 1 PASS 24 DIA. (150 Psig DWP)
CONDENSER OUTLET "16" 1 PASS 24 DIA. (150 Psig DWP)

---
Victaulic Grooved Nozzles (per ANSI / AWWA C-606)
---
Optional water box hinges not shown.
Overall unit width and inlet nozzle length may increase.

TUBE PULL AREA DETAIL

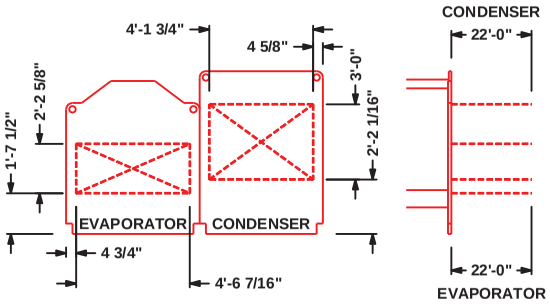


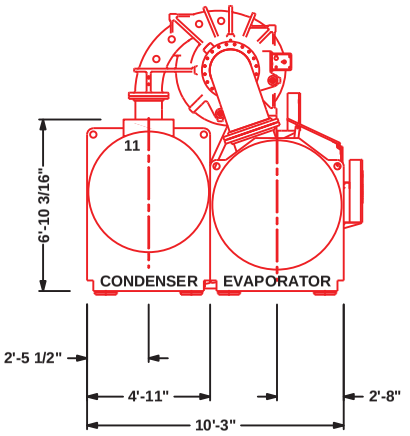


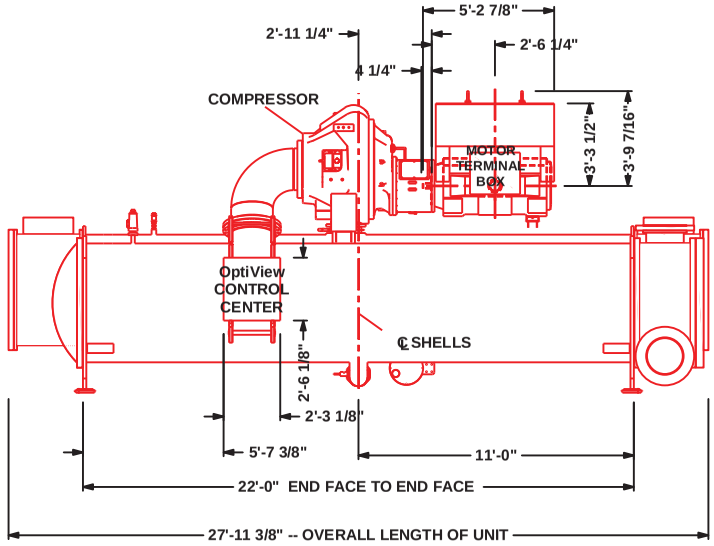


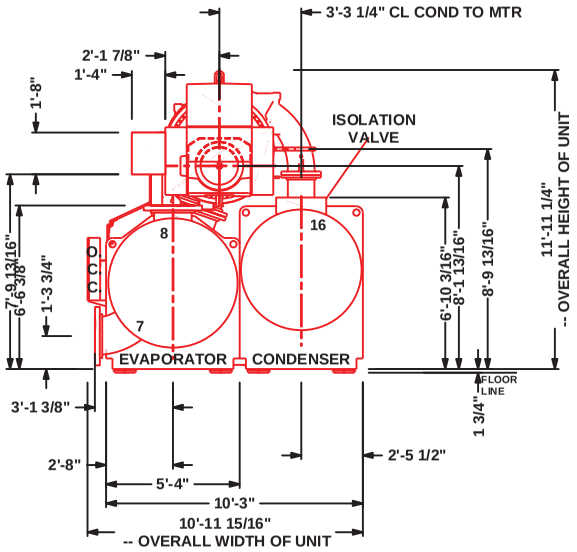


SHIPPING WT.: 96943 LBS, OPERATING WT. 122817 LBS, LOAD PER ISOLATOR 15352 LBS

# PRODUCT DRAWING

MaxE Centrifugal Liquid Chiller
MODEL YK WT WS K7 - DJ G
NOT FOR CONSTRUCTION

Project Name : UK-PAV A Chiller
Location :
Engineer :
Contractor :
For :

Sold To :
Cust Purch Order# :
York Contract#

UNIT TAG: **CH-2**

Date : 10/29/2015 14:25:3
Rev. Date : 12:55 PM
Form: 160.75-EG1
Dwg. Lev. : 1006
Dwg. Scale : NTS

YORK®
A JOHNSON CONTROLS COMPANY

# 4000V F1
# 4160V F1

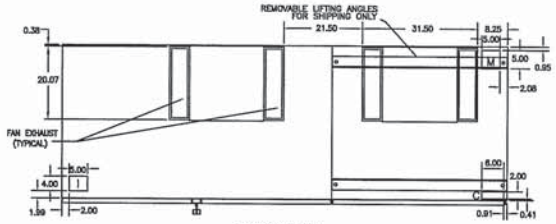


TOP VIEW

LH VIEW

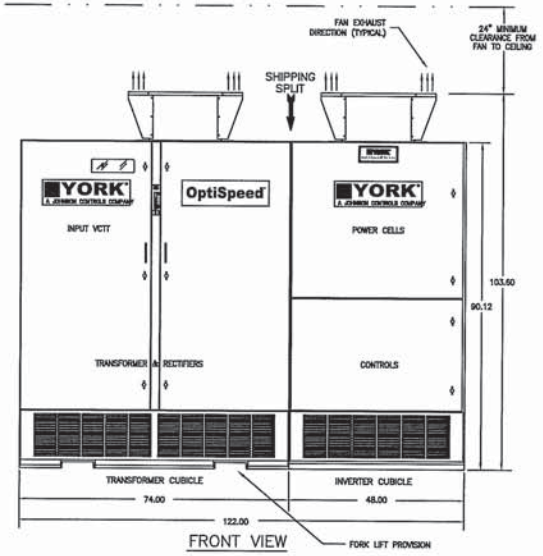


FRONT VIEW

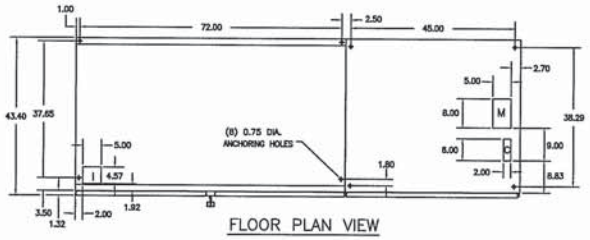


FLOOR PLAN VIEW

| CABLE TERMINATIONS | | | |
|---|---|---|---|
| ENTRY | INCOMING CABLES | MOTOR LEADS | CONTROL WIRE |
| TOP | I | M | C |
| BOTTOM | I | M | C |
| INCOMING TERMINATIONS USE NEMA 4-HOLE PATTERN<br>MOTOR TERMINATIONS USE NEMA 4-HOLE PATTERN | | | |

NOTES
1. ENCLOSURE TYPE: NEMA 1 W/GASKETED DOORS
2. ALL WEIGHTS ARE APPROXIMATE
3. ALL DIMS ARE IN INCHES
4. POWER CELLS NEED TO BE REMOVED FOR ACCESS

| | DA | DB, DC | DD, DE, DF | DH | DJ |
|---|---|---|---|---|---|
| TRANSFORMER CUBICLE | 8,500 lbs | 7,700 lbs | 8,500 lbs | 9,400 lbs | 10,000 lbs |
| INVERTER CUBICLE | 2,500 lbs | 2,500 lbs | 2,500 lbs | 2,500 lbs | 2,500 lbs |

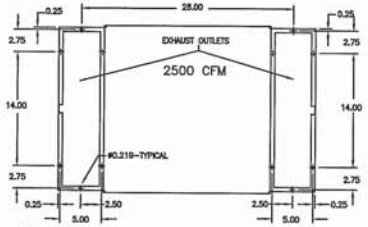


TYPICAL EXHAUST FAN HOLE PATTERN FOR CUSTOMER DUCTWORK (TOP VIEW)

# PRODUCT DRAWING

**Medium Voltage OptiSpeed VSD**

**NOT FOR CONSTRUCTION**

YORK®
A JOHNSON CONTROLS COMPANY

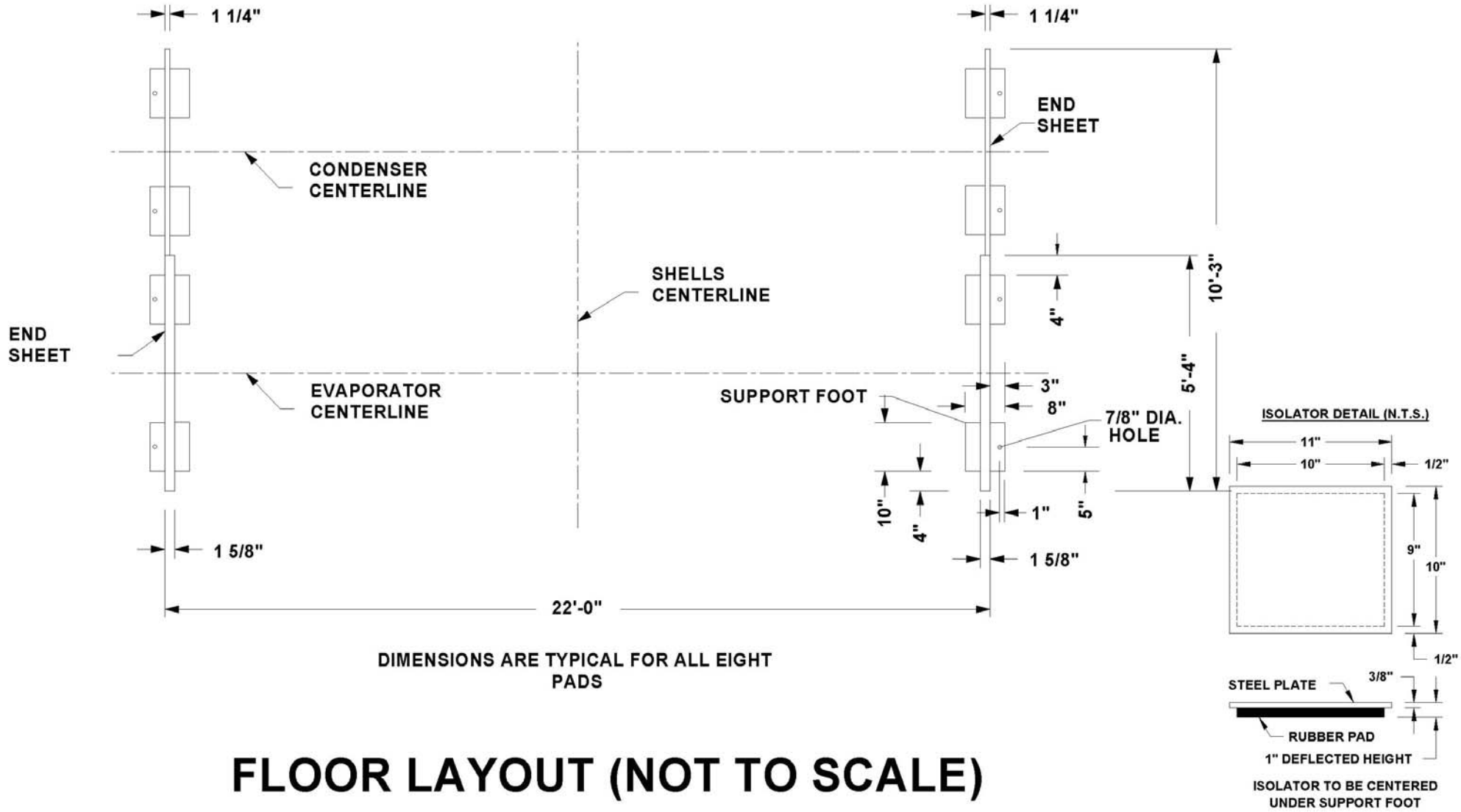


DIMENSIONS ARE TYPICAL FOR ALL EIGHT PADS

# FLOOR LAYOUT (NOT TO SCALE)

| | | | |
|---|---|---|---|
| **PRODUCT DRAWING**<br>FLOOR LAYOUT W/NEOPRENE ISOLATORS<br>MODEL YK WT WS K7 - DJ G<br>NOT FOR CONSTRUCTION | Project Name : UK-PAV A Chiller<br>Location :<br>Engineer :<br>Contractor :<br>For : | Sold To :<br>Cust Purch Order# :<br>York Contract# :<br>UNIT TAG: **CH** | Date : 4/29/2015 9:15:3<br>Rev. Date : 10:45 AM<br>Form: 160.75-EG1<br>Dwg. Lev. : 1006<br>Dwg. Scale : NTS |

YORK®
A JOHNSON CONTROLS COMPANY

# THERMAL INSULATION DRAWING

NOTES:

1. ALL SURFACE AREAS TO BE INSULATED SHALL BE CLEANED FREE OF OIL, DIRT AND DUST PRIOR TO INSULATING.
2. ALL SEAMS AND JOINTS IN INSULATION TO BE CUT SQUARE, GLUED, TAPED AND SEAL GLUED. THIS INCLUDES FORM TO METAL JOINTS WHICH ARE ACCESSIBLE.
3. PRIMARILY 2" WIDE TAPE IS TO BE USED THROUGH-OUT WITH EXCEPTION TO 90° SEAMS AND JOINTS ON CONTOURED SURFACES WHERE 3/4" WIDE TAPE IS TO BE USED.
4. INSULATE EVERYTHING SHOWN IN HEAVY OUTLINE.
5. ALLOW VALVE ACCESS.
6. INSULATE PANEL SUPPORTS (SEE SECTION A-A), COMPRESSOR SUPPORT, SOLID STATE STARTER SUPPORTS AND VARIABLE SPEED DRIVE SUPPORTS OUT TO 4" FROM EVAPORATOR O.D.
7. ALL 1-1/2" APPLICATIONS TO HAVE 3/4" INSULATION ON:
   A - EDGES OF TUBE HEADS
   B - EDGES OF FLANGES
   C - PANEL AND MISC. SUPPORTS

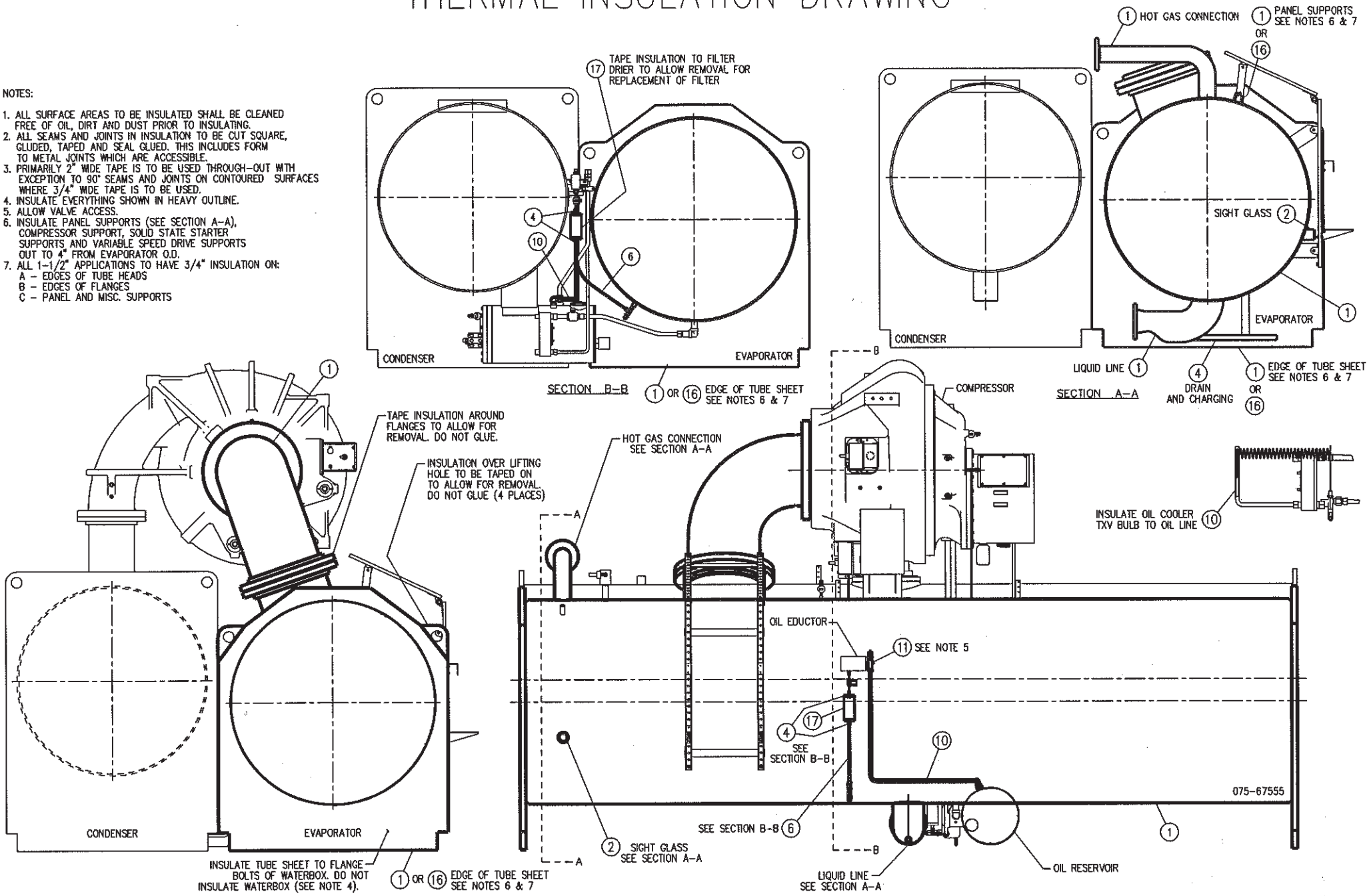

# YK MOD G - THERMAL INSULATION RECOMMENDATIONS ( I, K - Z SHELLS, WITH/ K COMPRESSORS )

## 1-1/2" INSULATION - WITHOUT/HOT GAS BY-PASS --- English

| ITEM NO. | DESCRIPTION | COOLER CODE | | | | | | | | | | |
|---|---|---|---|---|---|---|---|---|---|---|---|---|
| | | I | K | M | N | P | Q | R | S | X | W | Z |
| 1 | INSULATION - 1-1/2" thick - SHELL ONLY - (SQ. FT.) | 343 | 343 | 354 | 398 | 398 | 398 | 409 | 476 | 608 | 541 | 619 |
| | 42" to 49" width x 65" long x 1-1/2" thick (EA.) | 15.5 | 15.5 | 16 | 18 | 18 | 18 | 18.5 | 21.5 | 27.5 | 24.5 | 28 |
| | COOLER WITH: (SQ. FT.) | | | | | | | | | | | |
| | COMPACT WATER BOXES (150#) | 387 | 387 | 413 | 457 | 457 | 457 | 477 | 544 | 676 | 618 | 696 |
| | COMPACT WATER BOXES (300#) | 392 | 392 | 411 | 455 | 463 | 463 | 481 | 548 | 680 | 624 | 702 |
| | MARINE WATER BOXES (150#) | 428 | 428 | 454 | 498 | 515 | 515 | 537 | 604 | 736 | 684 | 762 |
| | MARINE WATER BOXES (300#) | 434 | 434 | 460 | 504 | 523 | 523 | 547 | 614 | 746 | 694 | 772 |
| | WATER BOXES ONLY: (SQ. FT.) | | | | | | | | | | | |
| | COMPACT WATER BOXES (150#) | 44 | 44 | 59 | 59 | 59 | 59 | 68 | 68 | 68 | 77 | 77 |
| | COMPACT WATER BOXES (300#) | 49 | 49 | 57 | 57 | 65 | 65 | 72 | 72 | 72 | 83 | 83 |
| | MARINE WATER BOXES (150#) | 85 | 85 | 100 | 100 | 117 | 117 | 128 | 128 | 128 | 143 | 143 |
| | MARINE WATER BOXES (300#) | 91 | 91 | 106 | 106 | 125 | 125 | 138 | 138 | 138 | 153 | 153 |
| 2 | INSULATION RD - 2.500 I.D. x 3/4" wall thk. x 6 ft. long (EA.) | 0.75 | N/A | 0.5 | 0.5 | 0.5 | 0.5 | 0.5 | N/A | N/A | N/A | N/A |
| 3 | INSULATION - 2-7/8" I.D. x 3/4" wall thk. x 6 ft. long (FT.) | 0.5 | 0.5 | 1 | 1 | 1 | 1 | N/A | 0.5 | 0.5 | 0.5 | 0.5 |
| 4 | INSULATION - 1-3/8" I.D. x 3/4" wall thk. x 6 ft. long (FT.) | 3 | 2.5 | 2.5 | 2.5 | 2.5 | 2.5 | 2.5 | 2.5 | 2.5 | 2.5 | 2.5 |
| 5 | N/A | N/A | N/A | N/A | N/A | N/A | N/A | N/A | N/A | N/A | N/A | N/A |
| 6 | INSULATION - 3/8" I.D. x 3/4" wall thk. x 6 ft. long (FT.) | 3.25 | 3 | 3 | 3 | 3 | 3 | 3 | 4 | 4 | 4 | 4 |
| 7 | ELECTRICAL TAPE - 2" wide x .007 thk. x 108 ft. long (FT.) | 100 | 139 | 151 | 151 | 151 | 151 | 151 | 166 | 171 | 171 | 171 |
| 8 | ELECTRICAL TAPE - 3/4" wide x .007 thk. x 66 ft. long (FT.) | N/A | 114 | 117 | 117 | 117 | 117 | 117 | 119 | 124 | 124 | 124 |
| 9 | ADHESIVE SCOTCH GRIP - gallon (GL.) | 1.3 | 1.3 | 1.3 | 1.3 | 1.3 | 1.3 | 1.3 | 1.7 | 1.7 | 1.7 | 1.7 |
| 10 | INSULATION - 3/4" I.D. x 3/4" wall thk. x 6 ft. long (FT.) | 6.25 | 6 | 6 | 6 | 6 | 6 | 6 | 12 | 12 | 12 | 12 |
| 11 | INSULATION - 2-3/8" I.D. x 3/4" wall thk. x 6 ft. long (FT.) | 1 | 1 | 1 | 1 | 1 | 1 | N/A | 1 | 1 | 1 | 1 |
| 16 | INSULATION - 42" to 49" width x 65" long x 3/4" thick (SQ.FT.) | N/A | N/A | 33 | 33 | 33 | 33 | 33 | N/A | N/A | N/A | N/A |
| | (EA.) | N/A | N/A | 1.5 | 1.5 | 1.5 | 1.5 | 1.5 | N/A | N/A | N/A | N/A |
| 17 | INSULATION - 2-1/2" I.D. x 3/4" wall thk. x 6 ft. long (FT.) | N/A | N/A | 1 | 1 | 1 | 1 | 1 | N/A | N/A | N/A | N/A |

# WIRING DIAGRAM FIELD CONNECTIONS (ELECTRO MECHANICAL STARTER)

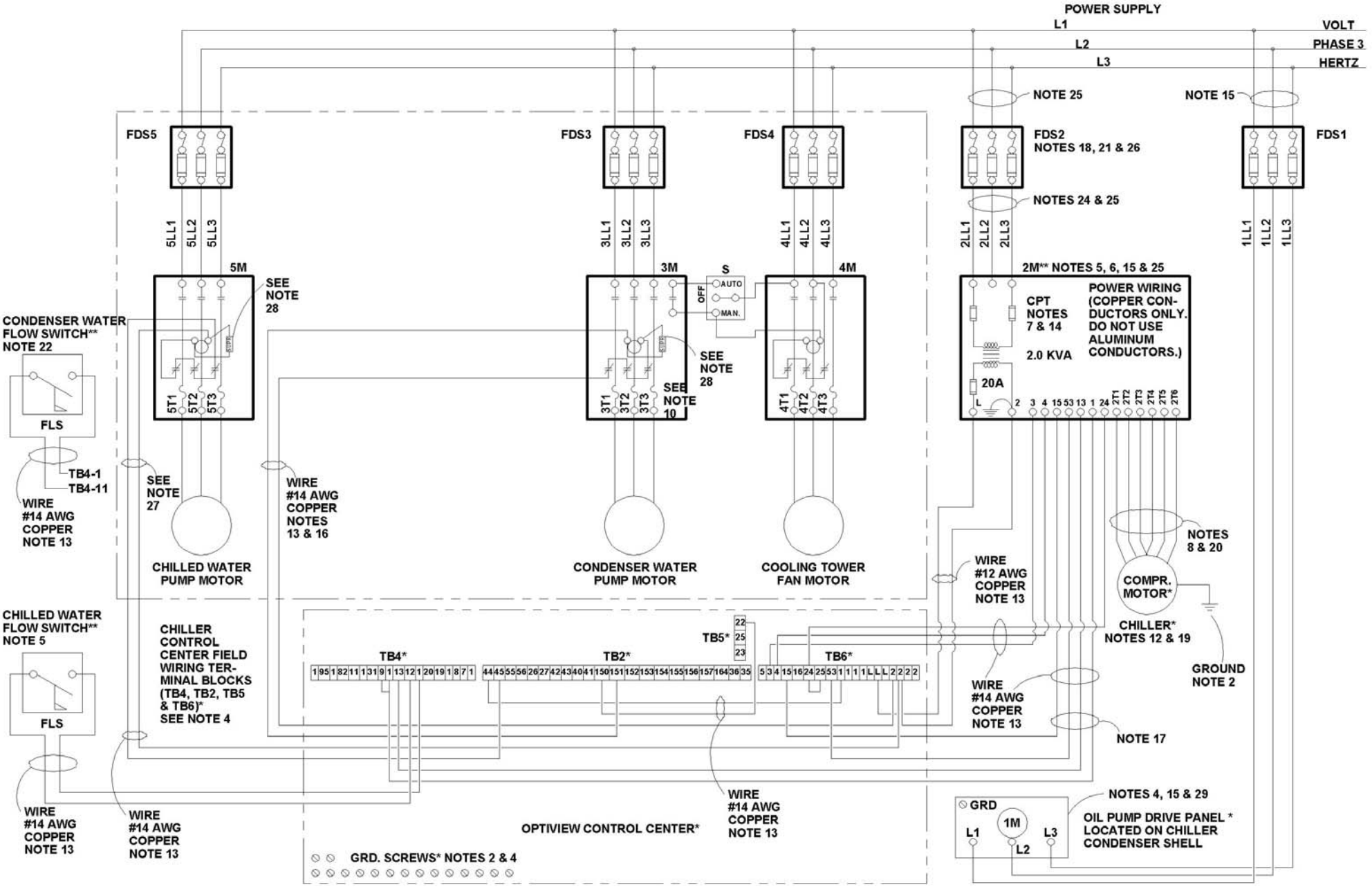


| | | | |
|---|---|---|---|
| **PRODUCT DRAWING**<br>OPTIVIEW CONTROL Center<br>WITH ELECTRO-MECHANICAL STARTER<br>NOT FOR CONSTRUCTION | Project Name : UK-PAV A Chiller<br>Location :<br>Engineer :<br>Contractor :<br>For : | Sold To :<br>Cust Purch Order# :<br>York Contract# :<br>UNIT TAG: **CH** | Date : 4/29/2015 9:15:3<br>Rev. Date : 10:45 AM<br>Form No.: 160.75-PW1<br>Dwg. Lev. : 1006<br>Dwg. Scale : NTS |

YORK®
A JOHNSON CONTROLS COMPANY

BY JOHNSON CONTROLS

Supersedes: 160.75-PW3 (311) Form 160.75-PW3 (513)

# FIELD CONNECTIONS FOR YK CHILLER (STYLE G) OPTIVIEW CONTROL CENTER WITH REMOTE MEDIUM VOLTAGE VSD

## WIRING DIAGRAM

| | |
|---|---|
| CONTRACTOR _____ | PURCHASER _____ |
| ORDER NO. _____ | JOB NAME _____ |
| YORK CONTRACT NO. _____ | LOCATION _____ |
| YORK ORDER NO. _____ | ENGINEER _____ |

☐ REFERENCE DATE _____ ☐ APPROVAL DATE _____ ☐ CONSTRUCTION DATE _____

**JOB DATA:**

CHILLER MODEL NO. YK_____NO. OF UNITS _____

COMPRESSOR MOTOR _____VOLTS, 3-PHASE _____ HZ

OIL PUMP MOTOR _____VOLTS, 3-PHASE _____ HZ

MEDIUM VOLTAGE VARIABLE SPEED DRIVE, MODEL NO. MVVSD_____R _____- _____

OPTIONAL FACTORY INSTALLED OIL PUMP POWER SUPPLY _____VOLTS, 3 PHASE __ HZ, __AMPS

Issue Date:
May 30, 2013

# IMPORTANT!

## READ BEFORE PROCEEDING!

### GENERAL SAFETY GUIDELINES

This equipment is a relatively complicated apparatus. During installation, operation maintenance or service, individuals may be exposed to certain components or conditions including, but not limited to: refrigerants, materials under pressure, rotating components, and both high and low voltage. Each of these items has the potential, if misused or handled improperly, to cause bodily injury or death. It is the obligation and responsibility of operating/service personnel to identify and recognize these inherent hazards, protect themselves, and proceed safely in completing their tasks. Failure to comply with any of these requirements could result in serious damage to the equipment and the property in which it is situated, as well as severe personal injury or death to themselves and people at the site.

This document is intended for use by owner-authorized operating/service personnel. It is expected that this individual posseses independent training that will enable them to perform their assigned tasks properly and safely. It is essential that, prior to performing any task on this equipment, this individual shall have read and understood this document and any referenced materials. This individual shall also be familiar with and comply with all applicable governmental standards and regulations pertaining to the task in question.

***External wiring, unless specified as an optional connection in the manufacturer's product line, is not to be connected inside the OptiView cabinet. Devices such as relays, switches, transducers and controls and any external wiring must not be installed inside the micro panel. All wiring must be in accordance with Johnson Controls' published specifications and must be performed only by a qualified electrician. Johnson Controls will NOT be responsible for damage/problems resulting from improper connections to the controls or application of improper control signals. Failure to follow this warning will void the manufacturer's warranty and cause serious damage to property or personal injury.***

### CHANGEABILITY OF THIS DOCUMENT

In complying with Johnson Controls' policy for continuous product improvement, the information contained in this document is subject to change without notice. While Johnson Controls makes no commitment to update or provide current information automatically to the manual owner, that information, if applicable, can be obtained by contacting the nearest Johnson Controls Service office.

Operating/service personnel maintains the responsibility of the applicability of these documents to the competitive equipment the kit is installed on. If there is any question regarding the applicability of these documents, the technician should verify whether the equipment has been modified and if current literature is available with the owner of the equipment prior to performing any work on the chiller.

## NOTES

1. All field wiring shall be in accordance with the current edition of the National Electrical Code (N.E.C.) as well as all other applicable codes and specifications.
2. Medium Voltage Variable Speed Drive and Compressor motor frame shall be grounded in accordance with the 2005 N.E.C. (Paragraph 250-118) for equipment grounding. When a separate grounding conductor is required, it must be a copper conductor only and sized per the 2005 N.E.C. (Table 250-122). Per 2005 N.E.C. [Paragraph 250-120 (f)(1)], where multiple (parallel) conduits are used each must contain a grounding conductor.
3. Wiring, electrical conduit, junction boxes, fused disconnect switches (FDS), or circuit breakers, starters (M), push-button stations (PB), manual-off-automatic switch (S), flow switch (FLS), and control relays furnished by others unless otherwise specified.
4. Items marked (*) furnished by Johnson Controls.
5. Items marked (**) available from Johnson Controls at additional cost.
6. Control Center power supply 115V-50/60 Hz, 2.0KVA capacity for control center only, is supplied by a control power transformer (1T) mounted within the Medium Voltage Variable Speed Drive as standard.
7. Motor power conduit connection location, motor full load amperes (FLA) and inrush amperes per Product Drawing Form 160.54-PA1. Multiple conduits shall contain an equal number of wires from each phase in each conduit to prevent overheating per 2005 N.E.C. (Paragraph 300-20 (a)). Use copper conductors only; DO NOT USE aluminum conductors. Flexible final connections should be used to provide vibration isolation.
8. A removable cover plate without knockouts is supplied for connection of power supply conduits. See *Table 1* for Frame information.
9. Condenser water pump motor starter (3M) holding coil to be furnished for 115V-50/60 Hz. The power requirements for the water pump starter (3M) must be a max. of 1 Amp holding and 10 Amps inrush. If power requirements exceed this value, furnish coil for line voltage, and control relay with 115V coil.
10. Wire #14 AWG copper for one way distance of less than 175 feet. Wire #12 AWG copper for one way distance of more than 175 feet, but less than 300 feet.
11. Wiring diagram for YORK OptiView Control Center Form 160.73-PW5. Field wiring modifications per Form 160.73-PW4. Wiring diagram for YORK Medium Voltage Variable Speed Drive Form 160.00-PW6.
12. The following interconnecting wires are field supplied when a YORK Medium Voltage Variable Speed Drive is used. (See Form 160.73-PW5.)
    A. 120 vac power – control panel Wire; single conductor, stranded, 10-12 awg, 600v, 75-90°C, THWN or UL style 1028/1015,UL listed and CSA approved, insulation shall be moisture resistant thermoplastic (pvc).

    Sys fault /run command - control panel Wire; single conductor, stranded, 14-18 awg, 600v, 75-90°C, THWN or UL style 1015,UL listed and CSA approved, insulation shall be moisture resistant thermoplastic (PVC)

    B. Drive to oil pump motor starter – wire; 3-conductor + ground cable, stranded 14 AWG, 600V 75-90°C, THHN/THWN in conduit UL Listed and CSA approved. Building wire per current N.E.C.

    C. Mod bus comms – Drive to control panel; 025 28701 003 Wire; 3 conductor w/foil shield and drain wire 20 AWG 300v, 80 °C, UL style 2464, UL listed and CSA approved; Alpha 5463, Belden 9364, Quabbin 022 or equivalent. Range 18-22 AWG.
13. Oil pump/drive power supply 460V-60Hz 400V-5Hz is supplied by a control power transformer mounted within the medium voltage variable speed drive as standard.

| 3 PHASE VOLTAGE | HZ | OIL PUMP DRIVE PANEL (AMPS) 2HP | CONTROL POWER (1T) TRANSFORMER (AMPS) | FDS1 OIL PUMP DRIVE PANEL FUSE |
|---|---|---|---|---|
| 460 | 60 | 3.6 | 4.5 | 6 |
| 400 | 50/60 | 4.3 | 5.3 | 7 |

14. The YORK Medium Voltage Variable Speed Drives (2300 to 4160 volts) have high interrupting capacity current limiting fuses plus an integral non-load disconnect function and thus do not require the use of FDS2, provided the Medium Voltage Variable Speed Drive is placed in sight of the chiller. If the FDS2 is required minimum ampere

rating shall be 1.15X (compressor motor amps and control power amps and oil pump amps). See note 13 for additional information for oil pump and control transformer amps.

15. The York Medium Voltage Variable Speed Drive input power wiring ampacity shall be calculated as follows.

    Model YK minimum circuit ampacity:

    Ampacity = 1.25X (Compressor Motor FLA) + Oil Pump Drive Panel Amps + Control Power Transformer Amps, where 125% factor is per 2005 N.E.C. Para. 440-33); FLA is per Note 7; Oil Pump Panel and Control Transformer Amps per Note 13. Oil Pump Panel and Control Transformer Amps value used, to be adjusted by ratio of (120/(MVVSD nameplate voltage). Oil pump amps to be included if MV VSD optional oil pump power supply is included.

16. Medium voltage (2300 to 4160 volts) motors have three leads. Motor leads are furnished with a crimp type connector having a clearance hole for a 3/8" bolt. Motor terminal lugs are not supplied.

17. Starter to motor power wiring ampacity shall be calculated as follows:

- Minimum circuit ampacity per conductor (one of three): Ampacity = 1.25 x compressor motor amps. Where 125% factor is per 2005 NEC (para 440-33); Compressor motor amps (See Note 7) are FLA.

18. The Condenser Flow Switch is optional. If not present, a jumper must be installed between TB4-11 and TB4-1.

19. The interrupting capacity of the YORK Medium Voltage Variable Speed Drive is 50 KA RMS symmetrical amperes at the nameplate voltage. The YORK MVVSD is suitable for use on a circuit capable of delivering not more than 50KA RMS symmetrical amperes at the nameplate voltage.

20. Three phase oil pump motor must be properly phased. L1, L2 and L3 corresponding to phase sequence A, B and C.

21. Control circuit wiring for 3M condenser water pump motor starter is shown for cooling only application. For units with Flash Miniature Card Software Version C.MLM.01.00 through C.MLM.01.03, the condenser water pump should be wired to terminal 164 of TB2 instead of terminal 151, and the wire from terminal 22 of TB5 to terminal 150 of TB2 shall not be installed. For software version C.MLM.01.04 and higher, the condenser water pump connection should be as shown in the figure.

22. The main power transformer should be adequately sized such that the transformer voltage drop does not exceed 10% during unit start-up. The supply voltage, at starter input terminals, during start-up must be maintained above the minimum value specified in the table below. Note that while the YORK chiller will perform acceptably during startup with this amount of voltage drop, the performance of other equipment connected to the supply transformer could be adversely affected.

| THREE PHASE VOLTAGE | HZ | MINIMUM VOLTAGE AT DRIVE INPUT TERMINALS DURING START-UP |
|---|---|---|
| 4160 | 60 | 3536 |
| 2300 | 60 | 1955 |
| 3300 | 50 | 2805 |

23. Automatic control of the chilled water pump by the OptiView Control Center is shown. Chilled water pump motor starter (5M) holding coil to be furnished for 115V-50/60 Hz. The power requirements for the water pump starter (5M) must be a maximum of 1 Amp holding and 8 Amps inrush. If power requirements exceed this value, furnish coil for line voltage, and control relay with 115V coil.

    The pumps operate during oil pump prerun, during compressor operation and during cycling shutdown.

24. Each 115VAC field-connected inductive load, i.e. relay coil, motor starter coil, etc. shall have a transient suppressor wired (by others) in parallel with its coil, physically located at the coil. Spare transient suppressors are factory supplied in a bag attached to the keypad cable clamp in the Control Center.

30. The OptiView Control Center has a single output for condenser pump control. When using this control output for heat recovery an additional control means is needed to select operation of tower water condenser pump or heating water condenser pump. The diagram depicts use of a 3 position selector switch which may be added near the chiller for such purposes. Alternatively, a BAS control scheme may be used to control operation of the two condenser water pumps.

31. For heat recovery applications, the heating condenser is provided with a thermal type flow sensor. If an optional mechanical type flow switch is used instead, it is connected between terminal [1] on TB6 (lower right area of the panel) and terminal [1] of TB20 on the LTC I/O board in the upper right side of the control cabinet.

## **TABLE 1 -** FRAME INFORMATION

### FRAME 0

| MVVSD Model Number | MVVSD Hp | Voltage | Hz | Applicable Motor Codes | Transformer Cubical Weight | Inverter Cubical Weight | Max Input Conduit | Max Motor Conduit |
|---|---|---|---|---|---|---|---|---|
| MVVSD0500RK-92 | 500 | 3300 | 50 | 5CW, 5CX | | | (1) 4” | (2) 3” or (1) 4” |
| MVVSD0600RK-92 | 600 | 3300 | 50 | 5DB, 5DC | 8000 | 2500 | (1) 4” | (2) 3” or (1) 4” |
| | | | | | | | | |
| MVVSD0500RK-84 | 500 | 4160 | 60 | CR, CS | 6500 | 2500 | (1) 4” | (2) 3” or (1) 4” |
| MVVSD0600RK-84 | 600 | 4160 | 60 | CT, CU | 7700 | 2500 | (1) 4” | (2) 3” or (1) 4” |
| MVVSD0700RK-84 | 700 | 4160 | 60 | CV, CW, CX | 8500 | 2500 | (1) 4” | (2) 3” or (1) 4” |
| MVVSD0800RK-84 | 800 | 4160 | 60 | CY, CZ | 9400 | 2500 | (1) 4” | (2) 3” or (1) 4” |
| MVVSD0900RK-84 | 900 | 4160 | 60 | CA, CB | 10000 | 2500 | (1) 4” | (2) 3” or (1) 4” |

### FRAME 1

| MVVSD Model Number | MVVSD Hp | Voltage | Hz | Applicable Motor Codes | Transformer Cubical Weight | Inverter Cubical Weight | Max Input Conduit | Max Motor Conduit |
|---|---|---|---|---|---|---|---|---|
| MVVSD0500RK-80 | 500 | 2300 | 60 | CR, CS | 3700 | 2500 | (1) 4” | (2) 3” or (1) 4” |
| MVVSD0600RK-80 | 600 | 2300 | 60 | CT, CU | 4000 | 2500 | (1) 4” | (2) 3” or (1) 4” |
| MVVSD0700RK-80 | 700 | 2300 | 60 | CV, CW, CX | 4800 | 2500 | (1) 4” | (2) 3” or (1) 4” |
| MVVSD0800RK-80 | 800 | 2300 | 60 | CY, CZ | 5300 | 2500 | (1) 4” | (2) 3” or (1) 4” |
| MVVSD0900RK-80 | 900 | 2300 | 60 | CA, CB | 5800 | 2500 | (1) 4” | (2) 3” or (1) 4” |
| MVVSD1000RK-80 | 1000 | 2300 | 60 | DA | 6200 | 2500 | (1) 4” | (2) 3” or (1) 4” |
| | | | | | | | | |
| MVVSD0800RK-92 | 800 | 3300 | 50 | 5CT, 5CU, 5CV | 5500 | 2500 | (1) 4” | (2) 3” or (1) 4” |
| MVVSD0900RK-92 | 900 | 3300 | 50 | 5CW, 5CX | 6450 | 2500 | (1) 4” | (2) 3” or (1) 4” |
| MVVSD1000RK-92 | 1000 | 3300 | 50 | 5DA | 7200 | 2500 | (1) 4” | (2) 3” or (1) 4” |
| MVVSD1250RK-92 | 1250 | 3300 | 50 | 5DB, 5DC | 8000 | 2500 | (1) 4” | (2) 3” or (1) 4” |
| MVVSD1500RK-92 | 1500 | 3300 | 50 | 5DD, 5DE, 5DF | 8500 | 2500 | (1) 4” | (2) 3” or (1) 4” |
| | | | | | | | | |
| MVVSD1000RK-84 | 1000 | 4160 | 60 | DA | 6500 | 2500 | (1) 4” | (2) 3” or (1) 4” |
| MVVSD1250RK-84 | 1250 | 4160 | 60 | DB, DC | 7700 | 2500 | (1) 4” | (2) 3” or (1) 4” |
| MVVSD1500RK-84 | 1500 | 4160 | 60 | DD, DE, DF | 8500 | 2500 | (1) 4” | (2) 3” or (1) 4” |
| MVVSD1750RK-84 | 1750 | 4160 | 60 | DH | 9400 | 2500 | (1) 4” | (2) 3” or (1) 4” |
| MVVSD2000RK-84 | 2000 | 4160 | 60 | DJ | 10000 | 2500 | (1) 4” | (2) 3” or (1) 4” |

### FRAME 2

| MVVSD Model Number | MVVSD Hp | Voltage | Hz | Applicable Motor Codes | Transformer Cubical Weight | Inverter Cubical Weight | Max Input Conduit | Max Motor Conduit |
|---|---|---|---|---|---|---|---|---|
| MVVSD1750RK-92 | 1750 | 3300 | 50 | 5DG, 5DH | 11200 | 4500 | (2) 4” | (2) 4” |
| MVVSD2000RK-92 | 2000 | 3300 | 50 | 5DJ | 12000 | 4500 | (2) 4” | (2) 4” |
| | | | | | | | | |
| MVVSD2250RK-84 | 2250 | 4160 | 60 | DK | 11200 | 4500 | (2) 4” | (2) 4” |
| MVVSD2500RK-84 | 2500 | 4160 | 60 | DL | 12000 | 4500 | (2) 4” | (2) 4” |

### FRAME 3

| MVVSD Model Number | MVVSD Hp | Voltage | Hz | Applicable Motor Codes | Transformer Cubical Weight | Inverter Cubical Weight | Max Input Conduit | Max Motor Conduit |
|---|---|---|---|---|---|---|---|---|
| MVVSD1250RK-80 | 1250 | 2300 | 60 | DB, DC | 8800 | 4500 | (2) 4” | (3) 4” |
| MVVSD1500RK-80 | 1500 | 2300 | 60 | DD, DE, DF | 9500 | 4500 | (2) 4” | (3) 4” |
| MVVSD1750RK-80 | 1750 | 2300 | 60 | DH | 10000 | 4500 | (2) 4” | (3) 4” |
| | | | | | | | | |
| MVVSD2250RK-92 | 2250 | 3300 | 50 | 5DK | 12700 | 5500 | (2) 4” | (3) 4” |
| MVVSD2500RK-92 | 2500 | 3300 | 50 | 5DL | 13500 | 5500 | (2) 4” | (3) 4” |

### FRAME 4

| MVVSD Model Number | MVVSD Hp | Voltage | Hz | Applicable Motor Codes | Transformer Cubical Weight | Inverter Cubical Weight | Max Input Conduit | Max Motor Conduit |
|---|---|---|---|---|---|---|---|---|
| MVVSD2000RK-80 | 2000 | 2300 | 60 | DJ | 12500 | 6000 | (2) 4” | (2) 4” |
| MVVSD2250RK-80 | 2250 | 2300 | 60 | DK | 12500 | 6000 | (2) 4” | (2) 4” |
| MVVSD2500RK-80 | 2500 | 2300 | 60 | DL | 12500 | 6000 | (2) 4” | (2) 4” |

# FIELD CONNECTIONS

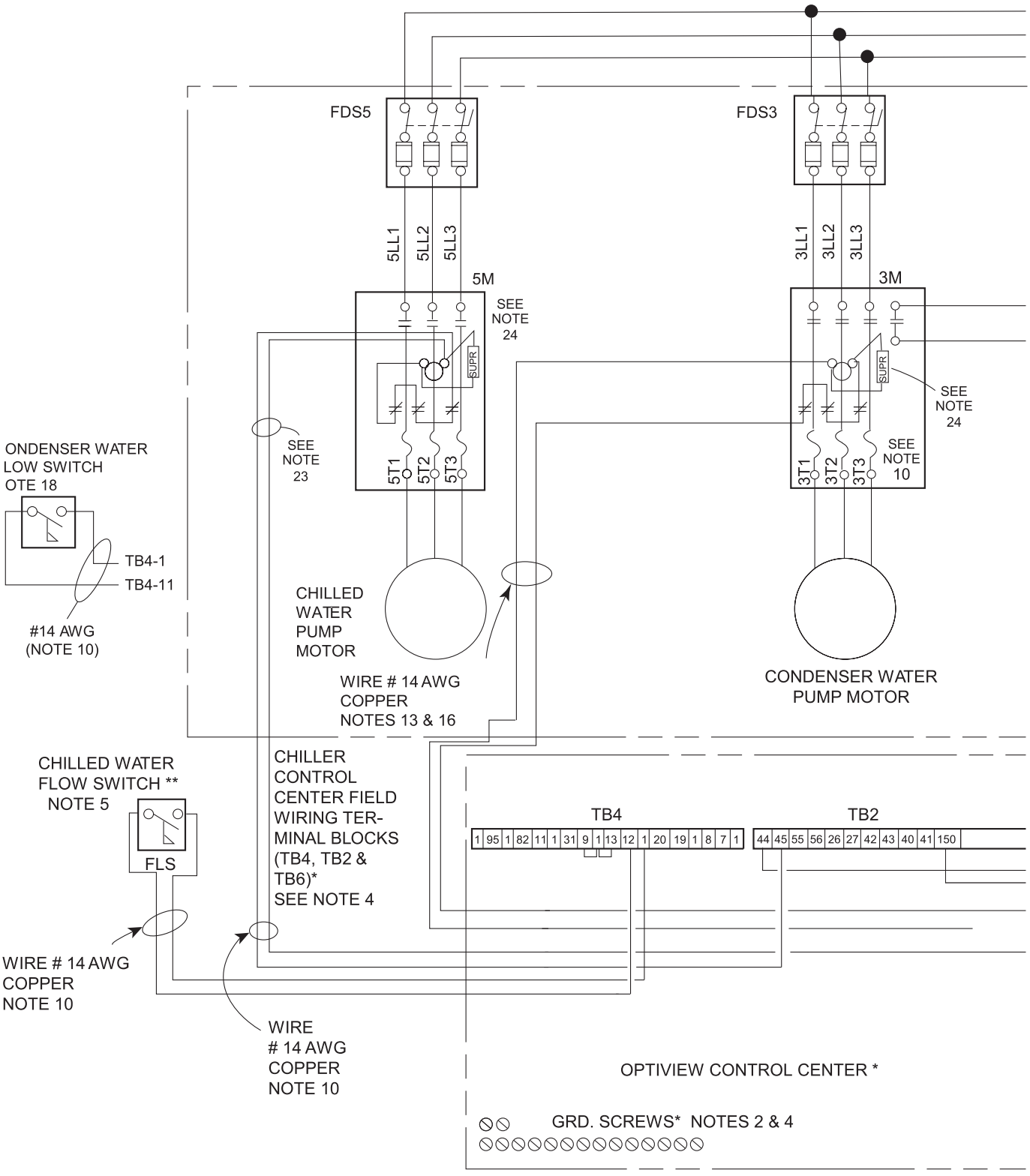


LD13210

**FIGURE 1 -** FIELD CONNECTIONS

# FIELD CONNECTIONS (CONT'D)

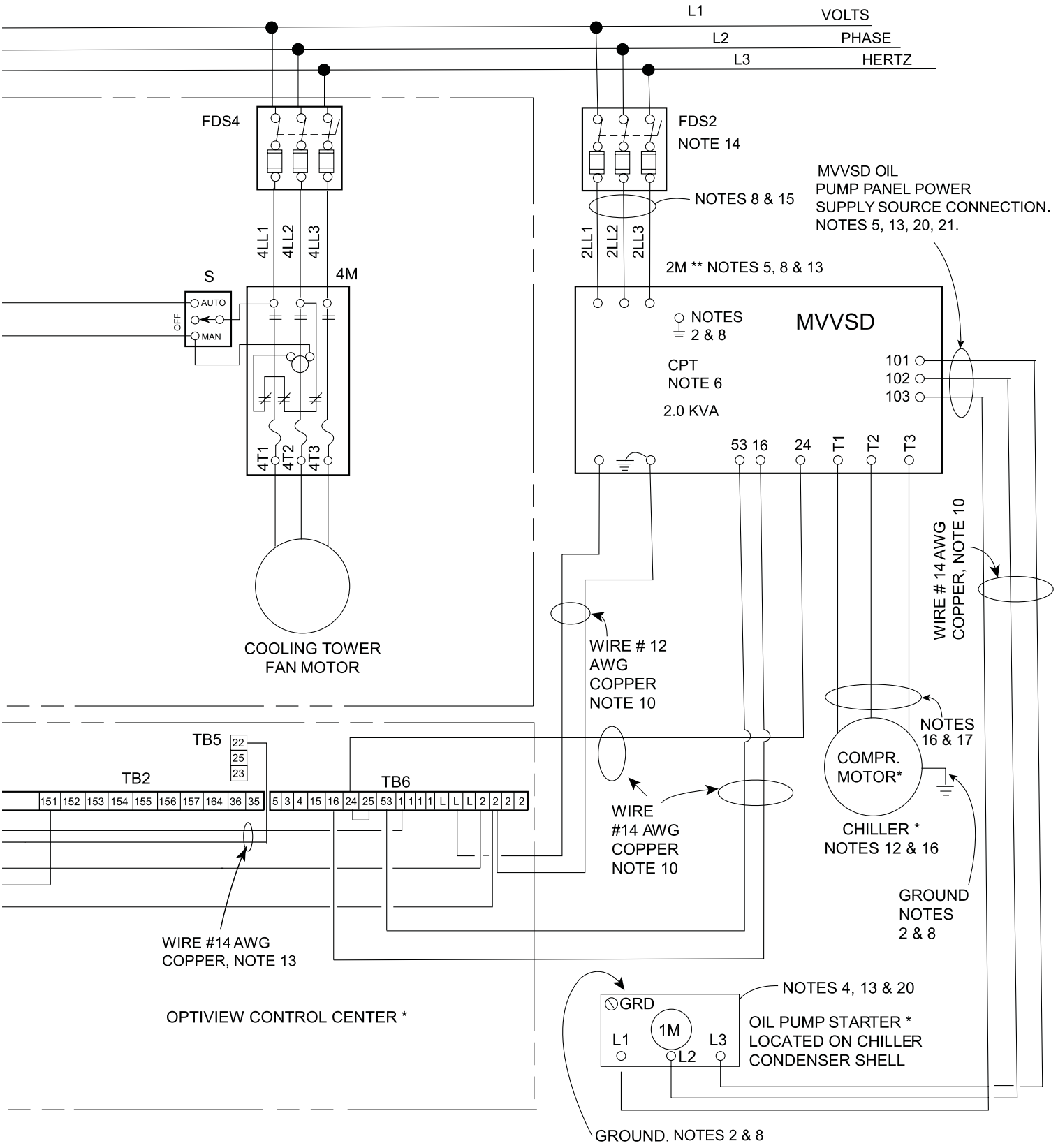


LD13211a

FIGURE 1 - FIELD CONNECTIONS (CONT'D)

# FIELD CONNECTIONS
# HEAT RECOVERY SUPPLEMENT

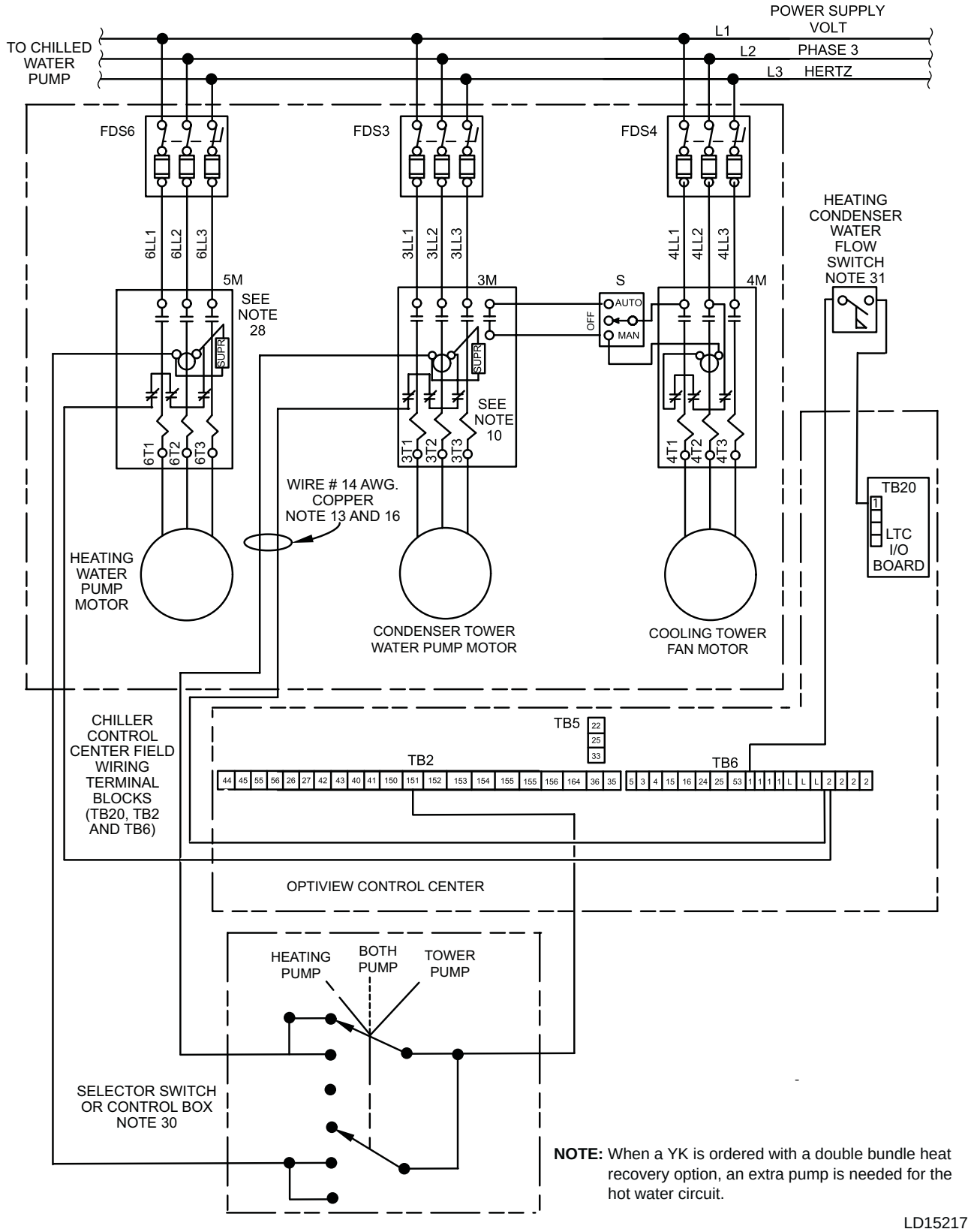


**NOTE:** When a YK is ordered with a double bundle heat recovery option, an extra pump is needed for the hot water circuit.

LD15217

**FIGURE 2 -** FIELD CONNECTIONS HEAT RECOVERY SUPPLEMENT

| Johnson Controls | STANDARD LIMITED WARRANTY ENGINEERED SYSTEMS EQUIPMENT | |
|---|---|---|
| SERVICE POLICY | Supersedes: 50.05-NM2 (812) | Form 50.05-NM2 (1212) |

## POLICY STATEMENT

Johnson Controls (JCI) warrants all equipment and associated factory supplied materials or start-up services performed by Johnson Controls in connection therewith, against defects in workmanship and material for a period of eighteen (18) months from date of shipment, or twelve (12) months from date of start up, whichever occurs first. Subject to the exclusions listed below, Johnson Controls, at its option, will repair or replace, FOB point of shipment, such products or components as it finds defective.

Except for reciprocating replacement compressors, which Johnson Controls warrants for a period of twelve (12) months from date of shipment, Johnson Controls warrants Johnson Controls reconditioned or replacement materials, or installation or start-up services performed by Johnson Controls in connection therewith, against defects in workmanship and material for a period of (90) days from date of shipment.

The above represents the minimum warranty policy Johnson Controls will extend to customers. Additional product specific coverage is provided as outlined in related warranty policies. No warranty repairs or replacements will be made until payment for all equipment, materials, or components has been received by Johnson Controls.

## EXCLUSIONS:

Unless specifically agreed to in the contract documents, this warranty does not include the following costs and expenses:

1. Labor to remove or reinstall any equipment, materials or components.
2. Shipping, handling or transportation charges, including cranes, safety walks or other safety requirements specific to jobsites.
3. Cost of refrigerant.
4. Freight damage.
5. Field applied coatings added to any surface or heat exchanger.
6. Rental Chillers.

## ALL WARRANTIES ARE VOID IF:

1. Equipment is used with refrigerants, oil, additives, or antifreeze agents other than those authorized by supplying factory.
2. Equipment is used with any material or any equipment such as evaporators, tubing, other low side equipment or refrigerant controls not approved by supplying factory.
3. Equipment has been damaged by freezing because it was not properly protected during cold weather or damaged by fire or any other conditions not ordinarily encountered.
4. Equipment is not installed, operated, maintained and serviced in accordance with instructions issued by Johnson Controls.
5. Equipment is damaged due to dirt, air, moisture, or other foreign matter entering the refrigerant system.
6. Equipment is not properly stored, protected, or inspected by the customer during the period from date of shipment to date of initial start-up.
7. Field coating of coil has occurred.
8. Equipment is damaged due to acts of god, abuse, including shipping damage, neglect, sabotage, or acts of terrorists.
9. Equipment has modifications carried out that have an effect on the original design of the product without such work being authorized by the factory. Any on site design changes or unit modification/replacement shall be authorized in advance by the factory.

THIS WARRANTY IS IN LIEU OF ALL OTHER WARRANTIES AND LIABILITIES, EXPRESS OR IMPLIED IN LAW OR IN FACT, INCLUDING THE WARRANTIES OF MERCHANTABILITY AND FITNESS FOR A PARTICULAR PURPOSE. THE WARRANTIES CONTAINED HEREIN SET FORTH BUYER'S SOLE AND EXCLUSIVE REMEDY IN THE EVENT OF A DEFECT IN WORKMANSHIP OR MATERIALS. IN NO EVENT SHALL JOHNSON CONTROLS' LIABILITY FOR DIRECT OR COMPENSATORY DAMAGES EXCEED THE PAYMENTS RECEIVED BY JOHNSON CONTROLS FROM BUYER FOR THE MATERIAL OR EQUIPMENT INVOLVED, NOR SHALL JOHNSON CONTROLS BE LIABLE FOR ANY SPECIAL, INCIDENTAL, OR CONSEQUENTIAL DAMAGES. THESE LIMITATIONS ON LIABILITY AND DAMAGES SHALL APPLY UNDER ALL THEORIES OF LIABILITY OR CAUSES OF ACTION, INCLUDING BUT NOT LIMITED TO, CONTRACT, WARRANTY, TORT, (INCLUDING NEGLIGENCE) OR STRICT LIABILITY. THE ABOVE LIMITATIONS SHALL INURE TO THE BENEFIT OF JOHNSON CONTROLS SUPPLIERS AND SUBCONTRACTORS.

Johnson Controls

Copyright © 2012 Johnson Controls, Inc.
Reference: BOS 03-23.105.BEGTM
P.O. Box 423, Milwaukee, WI 53203
www.johnsoncontrols.com
Printed in USA 50.05-NM2 (1212)
Replaces: 50.05-NM2 (812)

**OPTIONAL 66 MONTH (5 YEARS) PARTS & LABOR WARRANTY**
**FOR THE ENTIRE UNIT**
**JOHNSON CONTROLS/YORK INTERNATIONAL CORPORATION**
**ENGINEERED SYSTEMS - YORK PA**

PRODUCT TYPE: YK MAXE CHILLER
YORK CONTRACT NO.:
UNIT MODEL NUMBER: YKWTWSK7-DJGS
UNIT SERIAL NUMBER: _____
UNIT TAG ID: CH-2
UNIT LOCATION: _____
_____

COMPRESSOR SERIAL NUMBER(S):
_____
_____
_____
_____
_____
_____

PROJECT NAME: UK-PAV A CHILLER
INSTALLATION
ADDRESS:

_____
Shipping Date

The term of this agreement is 66 months, commencing _____ and expires _____.

**LIMITED WARRANTY**

WHEN PROPERLY ENDORSED, THIS PROTECTION PLAN BETWEEN JOHNSON CONTROLS, INCORPORATED (JCI) AND CUSTOMER, WARRANTS, TO THE CUSTOMER NAMED HEREIN, PARTS AND LABOR FOR THE ENTIRE CHILLER UNIT. IT DOES NOT COVER REFRIGERANT COST, FREIGHT CHARGES, OR ANY OTHER COSTS.

THIS WARRANTY EXCLUDES IMPLIED WARRANTIES OF MERCHANTABILITY AND FITNESS FOR A PARTICULAR PURPOSE, AND WE DO NOT ASSUME, OR AUTHORIZE ANY OTHER PERSON TO ASSUME OTHER WARRANTIES FOR US. THIS WARRANTY IS OFFERED AS AN EXTENSION TO THE STANDARD LIMITED WARRANTY (FORM 50.05-NM2) AND IS SUBJECT TO THE SAME LIMITATIONS AND EXCLUSIONS, EXCEPT WHERE NOTED.

THIS PROTECTION PLAN DOES NOT COVER FAILURE OR DAMAGE RESULTING FROM FIRE, FLOOD, ABUSE, OR ACT OF GOD. ALSO EXCLUDED ARE DAMAGES OR FAILURES CAUSED BY INSTALLATION, OPERATION, OR MAINTENANCE CONTRARY TO YORK RECOMMENDATIONS, OR THOSE OF THE MANUFACTURER IF OTHER THAN YORK. IN NO EVENT SHALL YORK BE LIABLE FOR CONSEQUENTIAL, INCIDENTAL, OR INDIRECT DAMAGE, LOSS, OR INJURY. WARRANTY SERVICE SHALL BE AVAILABLE THROUGH THE SERVICER LISTED HEREIN DURING NORMAL WORKING HOURS.

DISTRICT SERVICE OFFICE: _____

OFFERED BY: _____ _____
JCI/York Selling Representative Print/Sign — Date

APPROVED BY: _____ _____
JCI/York Area Service Manager Print/Sign — Date

ACCEPTED BY: _____ _____
Customer Signature — Date

(Manufacturer's Use Only)
AUTHORIZED BY: _____

Robert D. Kalinowski
Johnson Controls Quality Department, Customer Support Manager

6/14/2015 at 10:53
Date

Product Code Ref: 8513

**OPTIONAL 66 MONTH (5 YEARS) PARTS & LABOR WARRANTY**
**FOR THE VSD UNIT**
**JOHNSON CONTROLS/YORK INTERNATIONAL CORPORATION**
**ENGINEERED SYSTEMS - YORK PA**

PRODUCT TYPE: YK MAXE CHILLER
YORK CONTRACT NO.:
UNIT MODEL NUMBER: YKWTWSK7-DJGS
UNIT SERIAL NUMBER: _____
UNIT TAG ID: CH-2
UNIT LOCATION: _____
_____

COMPRESSOR SERIAL NUMBER(S):
_____
_____
_____
_____
_____
_____

PROJECT NAME: UK-PAV A CHILLER
INSTALLATION ADDRESS:

_____
Shipping Date

The term of this agreement is 66 months, commencing _____ and expires _____.

**LIMITED WARRANTY**

WHEN PROPERLY ENDORSED, THIS PROTECTION PLAN BETWEEN JOHNSON CONTROLS, INCORPORATED (JCI) AND CUSTOMER, WARRANTS, TO THE CUSTOMER NAMED HEREIN, PARTS AND LABOR FOR THE VSD UNIT. IT DOES NOT COVER REFRIGERANT COST, FREIGHT CHARGES, MOTOR OR CONTROL PANEL, OR ANY OTHER COSTS.

THIS WARRANTY EXCLUDES IMPLIED WARRANTIES OF MERCHANTABILITY AND FITNESS FOR A PARTICULAR PURPOSE, AND WE DO NOT ASSUME, OR AUTHORIZE ANY OTHER PERSON TO ASSUME OTHER WARRANTIES FOR US. THIS WARRANTY IS OFFERED AS AN EXTENSION TO THE STANDARD LIMITED WARRANTY (FORM 50.05-NM2) AND IS SUBJECT TO THE SAME LIMITATIONS AND EXCLUSIONS, EXCEPT WHERE NOTED.

THIS PROTECTION PLAN DOES NOT COVER FAILURE OR DAMAGE RESULTING FROM FIRE, FLOOD, ABUSE, OR ACT OF GOD. ALSO EXCLUDED ARE DAMAGES OR FAILURES CAUSED BY INSTALLATION, OPERATION, OR MAINTENANCE CONTRARY TO YORK RECOMMENDATIONS, OR THOSE OF THE MANUFACTURER IF OTHER THAN YORK. IN NO EVENT SHALL YORK BE LIABLE FOR CONSEQUENTIAL, INCIDENTAL, OR INDIRECT DAMAGE, LOSS, OR INJURY. WARRANTY SERVICE SHALL BE AVAILABLE THROUGH THE SERVICER LISTED HEREIN DURING NORMAL WORKING HOURS.

DISTRICT SERVICE OFFICE: _____

OFFERED BY: _____ _____
JCI/York Selling Representative Print/Sign — Date

APPROVED BY: _____ _____
JCI/York Area Service Manager Print/Sign — Date

ACCEPTED BY: _____ _____
Customer Signature — Date

(Manufacturer's Use Only)
AUTHORIZED BY: _____

Robert D. Kolczynski
Johnson Controls Quality Department, Customer Support Manager

6/14/2015 at 10:53
Date

Product Code Ref: 8541

# OPTIONAL 66 MONTH (5 YEARS) REFRIGERANT WARRANTY
# JOHNSON CONTROLS/YORK INTERNATIONAL CORPORATION
# ENGINEERED SYSTEMS - YORK PA

PRODUCT TYPE: YK MAXE CHILLER
YORK CONTRACT NO.:
UNIT MODEL NUMBER: YKWTWSK7-DJGS
UNIT SERIAL NUMBER: _____
UNIT TAG ID: CH-2
UNIT LOCATION: _____
_____

COMPRESSOR SERIAL NUMBER(S):
_____
_____
_____
_____
_____
_____

PROJECT NAME: UK-PAV A CHILLER
INSTALLATION ADDRESS:

_____
Shipping Date

The term of this agreement is 66 months, commencing _____ and expires _____.

## LIMITED WARRANTY

WHEN PROPERLY APPROVED AND AUTHORIZED BELOW, JOHNSON CONTROLS, INCORPORATED (JCI) WARRANTS TO THE CUSTOMER NAMED HEREIN, THAT YORK WILL PROVIDE THE CUSTOMER FREE OF CHARGE, WITH REPLACEMENT REFRIGERANT IN THE CASE OF ANY REFRIGERANT LOSS DUE TO ACCIDENTAL SYSTEM LEAKS. SERVICES TO RECYCLE CONTAMINATED REFRIGERANT ARE ALSO INCLUDED IN THE EVENT OF SYSTEM CONTAMINATION. THIS WARRANTY IS OFFERED ON PACKAGED STATIONARY WATER CHILLERS WITHIN THE EXTENDED WARRANTY PERIOD STATED ABOVE, AND IS TO BE OFFERED IN CONJUNCTION WITH A YORK 'MAINTENANCE CONTRACT' OR A YORK 'REFRIGERANT CONSERVATION SERVICE CONTRACT.' WE DO NOT AUTHORIZE ANY OTHER ENTITY TO PERFORM WARRANTY SERVICE ON OUR BEHALF. THIS WARRANTY IS OFFERED AS AN EXTENSION TO THE STANDARD LIMITED WARRANTY (FORM 50.05-NM2) AND IS SUBJECT TO THE SAME LIMITATIONS AND EXCLUSIONS STATED THEREIN, WHICH ARE HEREBY INCORPORATED HEREIN BY REFERENCE. REMOTE EVAPORATOR, REMOTE CONDENSER, FINNED TUBE, AND MOBILE UNITS ARE EXCLUDED FROM THIS COVERAGE.

THIS WARRANTY DOES NOT COVER REFRIGERANT LOSS RESULTING FORM FIRE, FLOOD, ABUSE, OR ACT OF GOD. ALSO EXCLUDED ARE DAMAGES OR FAILURES CAUSED BY OPERATION OR MAINTENANCE CONTRARY TO THE RECOMMENDATIONS OF THE EQUIPMENT MANUFACTURER. IN NO EVENT SHALL YORK BE LIABLE FOR SPECIAL CONSEQUENTIAL, INCIDENTAL, OR INDIRECT DAMAGE, LOSS OR INJURY OF ANY NATURE. WARRANTY SERVICE SHALL BE PROVIDED THROUGH THE SERVICER LISTED HEREIN DURING NORMAL WORKING HOURS AND AFTER SYSTEM FAULTS HAVE BEEN REPAIRED.

THE WARRANTY AND LIABILITY SET FORTH ABOVE ARE IN LIEU OF ALL OTHER WARRANTIES AND LIABILITIES, EXPRESS OR IMPLIED IN LAW OR IN FACT, INCLUDING THE WARRANTIES OF MERCHANTABILITY AND FITNESS FOR A PARTICULAR PURPOSE. THE WARRANTIES CONTAINED HEREIN SET FORTH BUYER'S SOLE AND EXCLUSIVE REMEDY IN THE EVENT OF A DEFECT IN WORKMANSHIP OR MATERIALS.

DISTRICT SERVICE OFFICE: _____

OFFERED BY: _____ _____
JCI/York Selling Representative Print/Sign — Date

APPROVED BY: _____ _____
JCI/York Area Service Manager Print/Sign — Date

ACCEPTED BY: _____ _____
Customer Signature — Date

(Manufacturer's Use Only)
AUTHORIZED BY: _____

Robert D. Kalczynski
Johnson Controls Quality Department, Customer Support Manager

6/14/2015 at 10:53
Date

Product Code Ref: 8599

| YORK BY JOHNSON CONTROLS | CENTRIFUGAL LIQUID CHILLERS | |
|---|---|---|
| **INSTALLATION INSTRUCTIONS** | Supersedes: 160.75-N1 (309) | Form 160.75-N1 (311) |

# MODEL YK (STYLE G)
# R-134a

# WITH OPTIVIEW™ CONTROL CENTER FOR ELECTRO-MECHANICAL STARTER, SOLID STATE STARTER AND VARIABLE SPEED DRIVE

LD15222

Metric Conversions

Issue Date:
March 30, 2011

# IMPORTANT!

## READ BEFORE PROCEEDING!

### GENERAL SAFETY GUIDELINES

This equipment is a relatively complicated apparatus. During installation, operation maintenance or service, individuals may be exposed to certain components or conditions including, but not limited to: refrigerants, materials under pressure, rotating components, and both high and low voltage. Each of these items has the potential, if misused or handled improperly, to cause bodily injury or death. It is the obligation and responsibility of operating/service personnel to identify and recognize these inherent hazards, protect themselves, and proceed safely in completing their tasks. Failure to comply with any of these requirements could result in serious damage to the equipment and the property in which it is situated, as well as severe personal injury or death to themselves and people at the site.

This document is intended for use by owner-authorized operating/service personnel. It is expected that this individual posseses independent training that will enable them to perform their assigned tasks properly and safely. It is essential that, prior to performing any task on this equipment, this individual shall have read and understood this document and any referenced materials. This individual shall also be familiar with and comply with all applicable governmental standards and regulations pertaining to the task in question.

### SAFETY SYMBOLS

The following symbols are used in this document to alert the reader to specific situations:

***Indicates a possible hazardous situation which will result in death or serious injury if proper care is not taken.***

***Identifies a hazard which could lead to damage to the machine, damage to other equipment and/or environmental pollution if proper care is not taken or instructions and are not followed.***

***Indicates a potentially hazardous situation which will result in possible injuries or damage to equipment if proper care is not taken.***

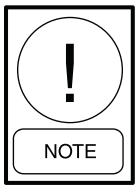


***Highlights additional information useful to the technician in completing the work being performed properly.***

***External wiring, unless specified as an optional connection in the manufacturer's product line, is not to be connected inside the OptiView cabinet. Devices such as relays, switches, transducers and controls and any external wiring must not be installed inside the micro panel. All wiring must be in accordance with Johnson Controls' published specifications and must be performed only by a qualified electrician. Johnson Controls will NOT be responsible for damage/problems resulting from improper connections to the controls or application of improper control signals. Failure to follow this warning will void the manufacturer's warranty and cause serious damage to property or personal injury.***

## CHANGEABILITY OF THIS DOCUMENT

In complying with Johnson Controls' policy for continuous product improvement, the information contained in this document is subject to change without notice. While Johnson Controls makes no commitment to update or provide current information automatically to the manual owner, that information, if applicable, can be obtained by contacting the nearest Johnson Controls Service office.

Operating/service personnel maintains the responsibility of the applicability of these documents to the competitive equipment the kit is installed on. If there is any question regarding the applicability of these documents, the technician should verify whether the equipment has been modified and if current literature is available with the owner of the equipment prior to performing any work on the chiller.

## ASSOCIATED LITERATURE

| MANUAL DESCRIPTION | FORM NUMBER |
|---|---|
| Solid State Starter (Mod "B") – Operation and Maintenance | 160.00-O2 |
| Variable Speed Drive – Operation | 160.00-O1 |
| Installation – Unit | 160.54-N1 |
| Operation – OptiView Control Panel | 160.54-O1 |
| Renewal Parts – Unit | 160.75-RP1 |
| Renewal Parts – OptiView Control Center | 160.54-RP1 |
| Wiring Diagram – Field Control Modifications for YK Chiller (Style G) | 160.75-PW4 |
| Wiring Diagram – YK Chiller (Style G) OptiView Control Center with Remote Low or Medium Voltage EMS | 160.75-PW5 |
| Wiring Diagram – YK Chiller (Style G) OptiView Control Center with Unit Mounted Low or Medium Voltage SSS, Unit Mounted Low Voltage VSD with Modbus, or Remote Medium Voltage VSD | 160.75-PW6 |
| Installation - Unit | 160.75-N3 |
| Operation - Unit | 160.75-O1 |

## NOMENCLATURE

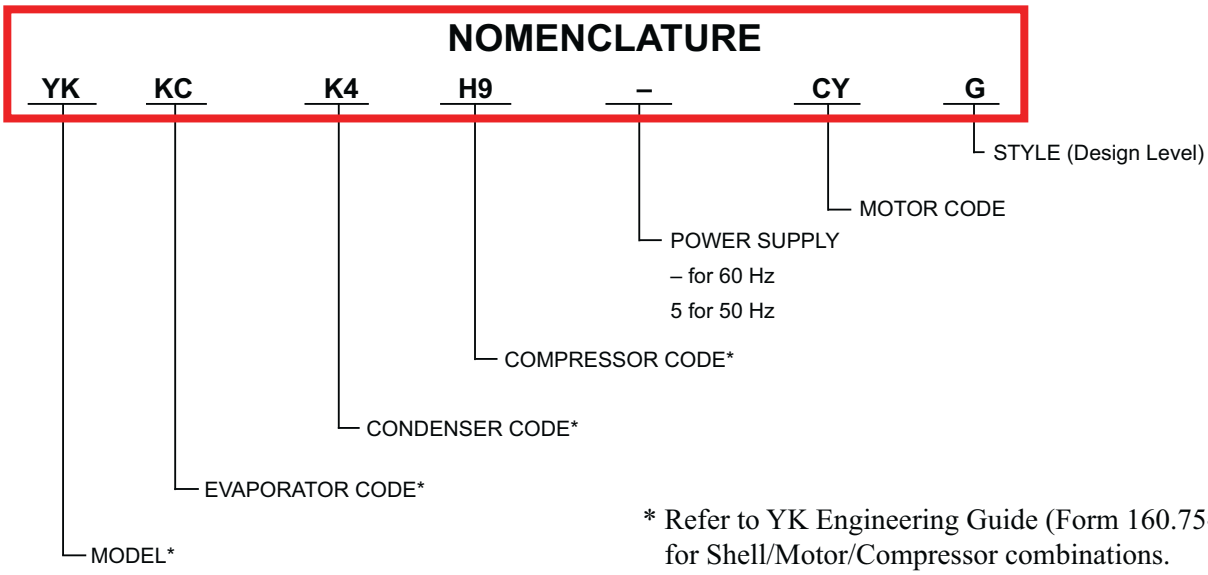


* Refer to YK Engineering Guide (Form 160.75-EG1) for Shell/Motor/Compressor combinations.

# SECTION 1 - INTRODUCTION

## GENERAL

This manual describes the installation of a YORK YK Mod "G" Centrifugal Chiller. This unit can be shipped as a single factory assembled, piped, wired package, requiring a minimum of field labor to make chilled water connections, condenser water connections, refrigerant atmospheric relief connections, and electrical power connections. Refrigerant and oil charges are shipped separately unless optional condenser isolation valves are ordered.

Chillers can also be shipped dismantled when required by rigging conditions, but generally it is more economical to enlarge access openings to accommodate the factory assembled unit. Chillers shipped dismantled MUST be field assembled under the supervision of a Johnson Controls representative, but otherwise installation will be as described in this instruction.

## FIELD ASSEMBLED UNITS ONLY

Use *Unit - Installation Instructions (Form 160.75-N3)* in conjunction with this installation instruction. This instruction will be furnished with all units that are to be field assembled.

The services of a Johnson Controls representative will be furnished to check the installation, supervise the initial start-up and operation of all chillers installed within the Continental United States.

***The Johnson Controls Warranty may be voided if the following restrictions are not adhered to:***

1. No valves or connections should be opened under any circumstances because such action will result in loss of the factory nitrogen charge.
2. Do not dismantle or open the chiller for any reason except under the supervision of a Johnson Controls representative.
3. When units are shipped dismantled, notify the nearest Johnson Controls office in ample time for a Johnson Controls representative to supervise rigging the unit to its operating position and the assembly of components.
4. Do not make final power supply connections to the compressor motor or control center.

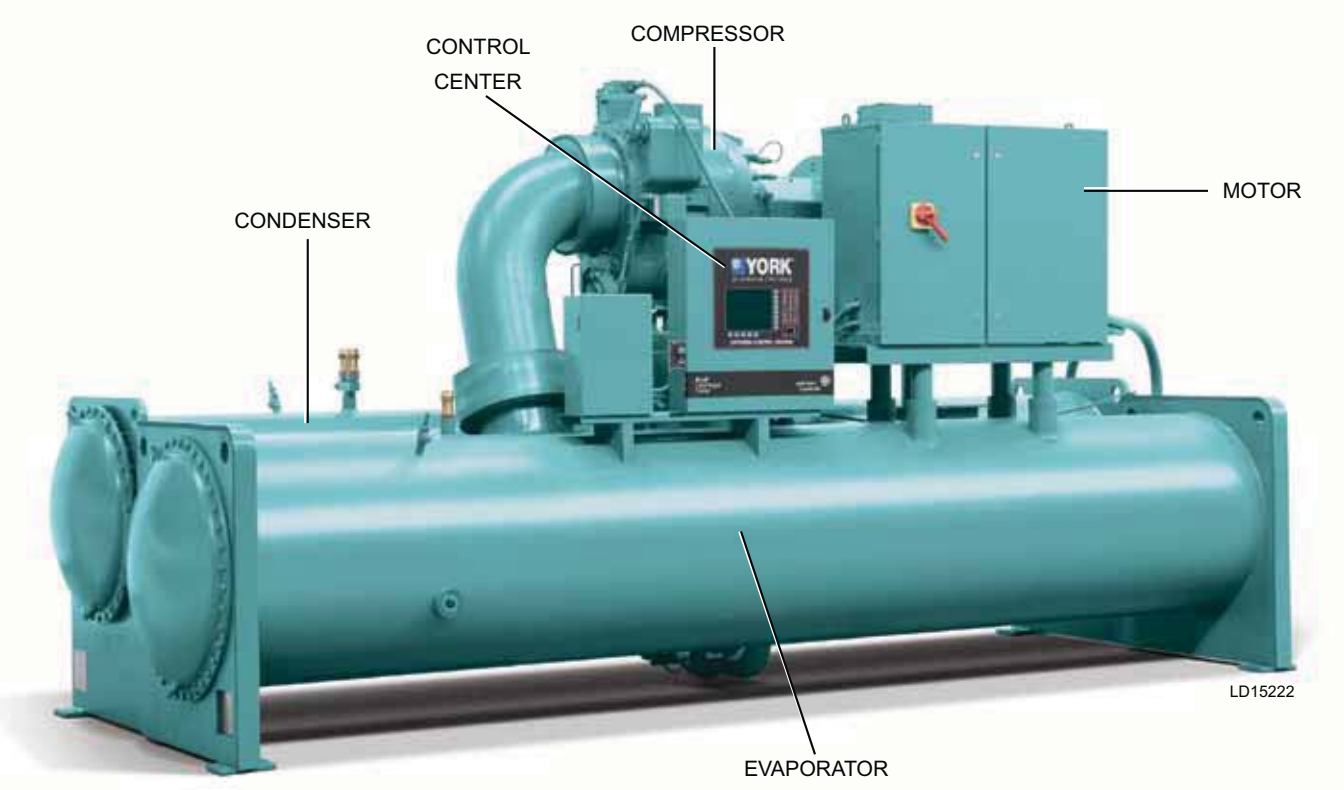


**FIGURE 1 -** MODEL YK CHILLER

5. Do not charge the compressor with oil.
6. Do not charge the unit with refrigerant.
7. Do not attempt to start the system.
8. Do not run hot water (110°F / 43°C max) or steam through the evaporator or condenser at any time.

## SHIPMENT

The chiller may be ordered and shipped in any of the following forms:

**Form 1 –** Factory Assembled Unit, complete with motor, refrigerant and oil charges.

- The motor/compressor assembly mounted, with all necessary interconnecting piping assembled. OptiView™ Control Center is mounted on the unit. Complete unit factory leak tested, evacuated and charged with R-134A.

  An optional Solid State Starter or Variable Speed Drive can be factory mounted and wired.

- Miscellaneous material – Four (4) vibration isolation pads (or optional spring isolators and brackets).

**Form 2 –** Factory Assembled Unit, complete with motor (refrigerant and oil charges shipped separately).

- The motor/compressor assembly mounted, with all necessary interconnecting piping assembled. OptiView™ Control Center is mounted on the unit. Complete unit factory leak tested, evacuated and charged with holding charge of nitrogen.

  An optional Solid State Starter or Variable Speed Drive can be factory mounted and wired.

- Miscellaneous material – Four (4) vibration isolation pads (or optional spring isolators).

**Form 3 –** Driveline Separate From Shells – Shipped as two major assemblies. Unit first factory assembled, refrigerant piped, wired and leak tested; then dismantled for shipment.

- Compressor/motor assembly removed from shells and skidded. Evaporator/condenser is not skidded.
- All wiring integral with compressor is left on it, and all conduit is left on shell. All openings on compressor, oil separator, and shell are closed and charged with dry nitrogen (2 to 3 PSIG) (115/122 kPa).
- Miscellaneous packaging of control center, tubing, water temperature controls, wiring, oil, isolators, solid state starter (option), etc.; refrigerant charge shipped separately.

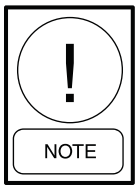


***Units shipped dismantled MUST be reassembled by, or under the supervision of, a Johnson Controls representative. Refer to Installation - Unit (Form 160.75-N3)***

**Form 7 –** Split Shells – Shipped as three major assemblies. Unit first factory assembled, refrigerant piped, wired and leak tested; then dismantled for shipment.

- Compressor/motor assembly removed from shells and skidded.
- Evaporator and condenser shells are separated at tube sheets and are not skidded. Refrigerant lines between shells are flanged and capped, requiring no welding.
- All wiring integral with compressor is left on it. All wiring harnesses on shells are removed. All openings on compressor and shells are closed and charged with dry nitrogen (2 to 3 psig) (115/122 kPa).
- Miscellaneous packaging of control center, tubing, water temperature controls, wiring, oil isolators, solid state starter (option), etc.; refrigerant charge shipped separately.

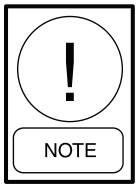


***Units shipped dismantled MUST be reassembled by, or under the supervision of, a Johnson Controls representative. Refer to Installation - Unit (Form 160.75-N3)***

When more than one chiller is involved, the major parts of each unit will be marked to prevent mixing of assemblies. (Piping and Wiring Drawings to be furnished by Johnson Controls)

## INSPECTION – DAMAGE – SHORTAGE

The unit shipment should be checked on arrival to see that all major pieces, boxes and crates are received.

Each unit should be checked on the trailer or rail car when received, before unloading, for any visible signs of damage. Any damage or signs of possible damage must be reported to the transportation company immediately for their inspection. Johnson Controls will not be responsible for any damage in shipment, at job site, or loss of parts. (Refer to Shipping Damage Claims, Form 50.15-NM.)

When received at the job site all containers should be opened and contents checked against the packing list. Any material shortage should be reported to Johnson Controls immediately. (Refer to Shipping Damage Claims, Form 50.15-NM.)

## CHILLER DATA PLATE

A unit data plate is mounted on the control center assembly of each unit, giving unit model number; design working pressure; water passes; refrigerant charge; serial numbers; and motor power characteristics and connection diagrams.

Additional information may be found on the motor data plate. This information should be included when contacting the factory on any problem relating to the motor.

## RIGGING

The complete standard chiller is shipped without skids. (When optional skids are used it may be necessary to remove the skids so riggers skates can be used under the unit end sheets to reduce overall height.)

Each unit has four (4) lifting holes (two in each end) in the end sheets which should be used to lift the unit.

Care should be taken at all times during rigging and handling of the chiller to avoid damage to the unit and its external connections. Lift only using holes shown in *Figure 2 on Page 9*.

***Do not lift the unit with slings around motor/compressor assembly or by means of eyebolts in the tapped holes of the compressor motor assembly. Do not turn a unit on its side for rigging. Do not rig vertically.***

The rigging and operating weights and overall dimensions are given on pages 22 thru 40 as a guide in determining the clearances required for rigging. Add 6" (15 cm) to overall height for optional skidded unit.

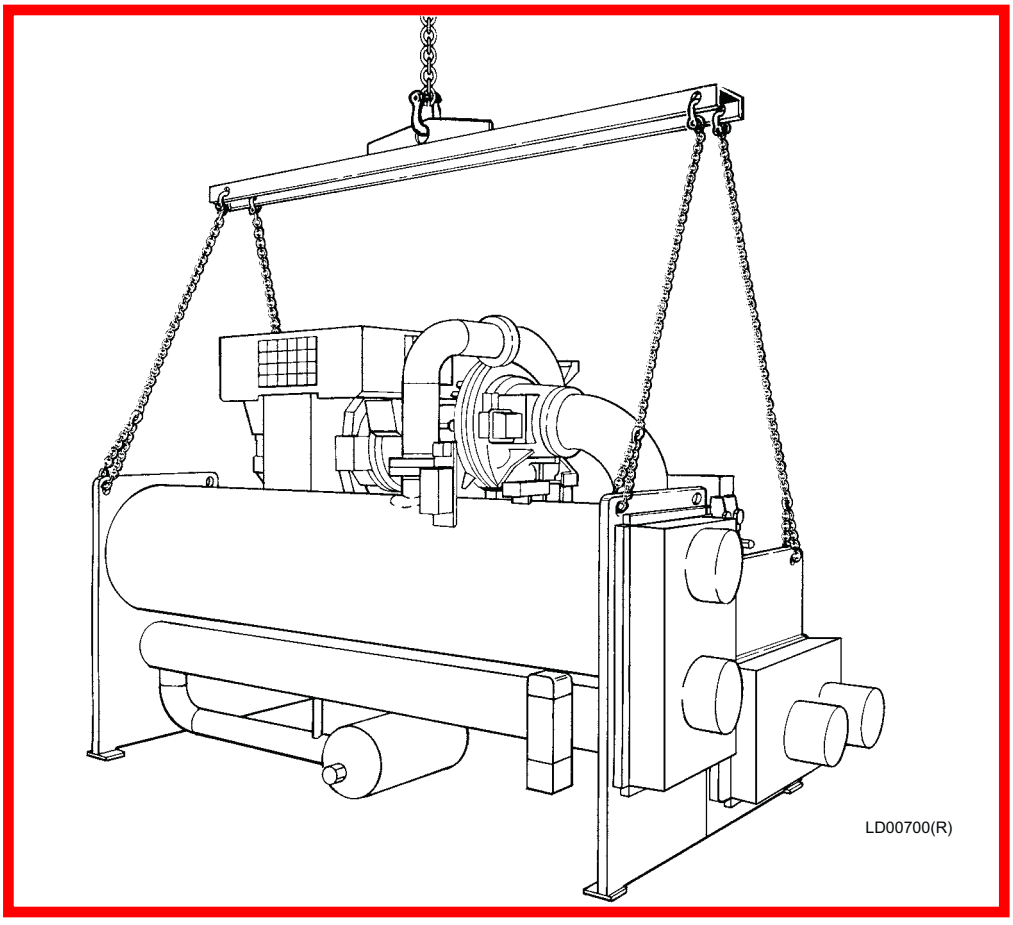


**FIGURE 2 -** RIGGING

## LOCATION

YORK Chillers are furnished with vibration isolator mounts for basement or ground level installations. Units may be located on upper floor levels providing the floor is capable of supporting the total unit operating weight and optional spring isolators are used.

***Sufficient clearance to facilitate normal service and maintenance work must be provided all around and above the unit and particularly space provided at either end to permit cleaning or replacement of evaporator and condenser tubes – see Clearance. A doorway or other sufficiently large opening properly located may be used. The chiller should be located in an indoor location where temperatures range from 40°F to 110°F (4.4°C to 43.3°C).***

## MOTORS

The YK open motor is air cooled. Check state, local and other codes for ventilation requirements.

## FOUNDATION

A level floor, mounting pad or foundation must be provided by others, capable of supporting the operating weight of the unit.

## CLEARANCE

Clearances should be adhered to as follows:

- Rear and above unit – 2 ft (61 cm).
- Front of unit – 3 ft (91 cm).
- Tube Removal – 14 ft.* (4.3 m) (either end)

* 16 ft (4.9 meters) on shell codes Q-Q, N-N, R-R, X-T and X-X.

** 18 ft (5.5 meters) on shell code S-S, S-V, Z-Z.

*** 22 ft (6.7 meters) on shell code W-W.

YORK
A JOHNSON CONTROLS COMPANY

# YK MAXE CHILLER
# MAINTENANCE REQUIREMENTS

## Maintenance Requirements for YORK YK MaxE Chillers

| Procedure | Daily | Weekly | Quarterly | Yearly | Every ____ Hours* |
|---|---|---|---|---|---|
| Record operating conditions (log) | X | | | | |
| Check oil levels | | X | | | |
| Check refrigerant levels | | X | | | |
| Check oil return system | | | X | | |
| Check operation of motor starter | | | X | | |
| Check sump heater and thermostat operation | | | X | | |
| Inspect and adjust safety controls (see note 1) | | | X | | |
| Leak check and repair leaks (see note 1) | | | X | | |
| Lubricate motor | | | X | | |
| Check and tighten all electrical connections | | | | X | |
| Megohm motor windings | | | | X | |
| Perform oil analysis on compressor lube oil (see note 1) | | | | X | |
| Replace oil filter and oil return filter/dryers | | | | X | |
| Replace or clean starter air filters, if applicable | | | | X | |

Note 1: This procedure must be performed at the specified time interval by an Industry Certified Technician who has been trained and qualified to work on this type of YORK equipment. A record of this procedure being successfully carried out must be maintained on file by the equipment owner should proof of adequate maintenance be required at a later date for warranty validation purposes.

* The column “Every _____ Hours” is reserved for any special site determined requirements.

# SECTION 26 0000 GENERAL ELECTRICAL REQUIREMENTS

## GENERAL

### 1.1 REFERENCE

A. Work under this Section is subject to requirements of Contract Documents including General Conditions, Supplementary Conditions, and sections under Division 01 General Requirements.

### 1.2 DESCRIPTION

A. Intent of drawings and Specifications is to obtain complete systems tested, adjusted, and ready for operation.

B. Except as otherwise defined in greater detail, the terms "provide", "furnish" and "install" as used in Division 26 Contract Documents shall have the following meanings:
   1. "Provide" or "provided" shall mean "furnish and install".
   2. "Furnish" or "furnished" does not include installation.
   3. "Install" or "installed" does not include furnishing.

C. Include incidental details not usually shown or specified, but necessary for proper installation and operation.

D. Check, verify and coordinate work with drawings and specifications prepared for other trades. Include modifications, relocations or adjustments necessary to complete work or to avoid interference with other trades.

E. Included in this Contract are electrical connections to equipment provided by others. Refer to Architectural, Mechanical, Plumbing, and final shop drawings for equipment being furnished under other sections for exact locations of electrical outlets and various connections required.

F. Information given herein and on drawings is as exact as could be secured but is not guaranteed. Do not scale drawings for dimensions.

G. Where architectural features govern location of work, refer to Architectural Drawings.

H. Perform work in "neat and workmanlike" manner as defined in ANSI/NECA 1, Standard Practices for Good Workmanship in Electrical Contracting.

### 1.3 RELATED WORK

A. Temporary Utility Services:
   1. Include costs for temporary service, temporary routing of service or other requirements of a temporary nature associated with utility service.

B. Temporary Services:
   1. Division 01 - Temporary Facilities and Controls.

C. Continuity of Service:
   1. No service shall be interrupted or changed without permission from Architect and Owner. Obtain written permission before work is started.
   2. When interruption of services is required, Architect, Owner and other concerned parties shall be notified and shall determine a time.

D. Concrete Work:
   1. Provide cast-in-place concrete as required by Contract Documents unless otherwise noted.
   2. Concrete shall comply with Division 03 - Concrete.
   3. Provide anchor bolts, metal shapes and templates to be cast in concrete or used to form concrete as required for anchoring and supporting electrical equipment.

E. Painting:
   1. Furnish equipment with factory-applied finish coats or paint equipment per Division 09 – Finishes unless specified otherwise.
   2. Furnish equipment with factory applied prime finish unless otherwise specified.
   3. If factory finish on equipment furnished by Contractor is damaged in shipment or during construction, refinish equipment to satisfaction of Architect.
   4. Furnish one can of touch up paint for each final factory-applied finish coat of product.

## 1.4 REQUIREMENTS OF REGULATORY AGENCIES

A. Rules and regulations of Federal, State and local authorities and utility companies, in force at time of execution of Contract shall become part of this specification.

## 1.5 REFERENCE STANDARDS

A. Agencies or publications referenced herein refer to the following:
   1. AEIC Association of Edison Illuminating Companies
   2. ANSI American National Standards Institute
   3. ASME American Society of Mechanical Engineers
   4. ASTM American Society for Testing and Materials
   5. BICSI Building Industry Consulting Services International
   6. EIA Electronic Industries Association
   7. FIPS Federal Information Processing Standards
   8. FCC Federal Communications Commission
   9. ICEA Insulated Cable Engineers Association
   10. IEEE Institute of Electrical & Electronics Engineers
   11. IESNA Illuminating Engineering Society of North America
   12. NEC National Electrical Code
   13. NECA National Electrical Contractors Association
   14. NEMA National Electrical Manufacturers Association
   15. NESC National Electrical Safety Code
   16. NETA National Electrical Testing Association
   17. NFPA National Fire Protection Association
   18. NIST National Institute of Standards & Technology
   19. OSHA Occupational Safety and Health Administration
   20. TIA Telecommunications Industries Association
   21. UL Underwriters Laboratories, Inc.

B. Work shall be in accordance with latest edition of codes, standards or specifications unless noted otherwise.

## 1.6 LISTING

A. Install materials bearing UL label or UL listing, unless UL label or listing is not available for that type of material.

B. Other nationally recognized testing agencies, acceptable to AHJ, are approved.

## 1.7 ENCLOSURES

A. Typical NEMA Enclosures and Usage
   1. NEMA 1 - Indoors. Falling dirt.
   2. NEMA 2 - Indoors. Falling dirt. Falling liquids. Light splashing.
   3. NEMA 3 - Outdoors. Sleet, snow, rain. Windblown dust.
   4. NEMA 3X - Same as NEMA 3 plus corrosion resistant.
   5. NEMA 3S - Same as NEMA 3 plus mechanism operable when ice covered.
   6. NEMA 3SX - Same as NEMA 3S plus corrosion resistant.
   7. NEMA 3R - Outdoors. Rain, snow, sleet.
   8. NEMA 3RX - Same as NEMA 3R plus corrosion resistant.
   9. NEMA 4 - Indoors. Falling dirt. Falling and light splashing liquids. Flying dust, lint and fibers. Hose down.
   10. NEMA 4X - Same as NEMA 4 - Indoors plus corrosion resistant.
   11. NEMA 4 - Outdoors. Rain, sleet, snow. Wind blown dust. Hose down.
   12. NEMA 4X - Same as NEMA 4 - Outdoors plus corrosion resistant.
   13. NEMA 5 - Indoors. Falling Dirt. Falling Liquids. Settling dust, lint and fibers.
   14. NEMA 6 - Indoors. Falling dirt. Falling and light splashing liquids. Flying dust, ling and fibers. Hose down. Temporary submersion.
   15. NEMA 6P - Same as NEMA 6 - Indoors plus corrosion resistant. Prolonged submersion.
   16. NEMA 6 - Outdoors. Rain, snow, sleet. Windblown dust. Hose down. Temporary submersion.
   17. NEMA 6P - Same as NEMA 6 - Outdoors plus corrosion resistant. Prolonged Submersion.
   18. NEMA 7 - Indoors. Class I, Division 1 or 2, Groups A, B, C or D. (Flammable gas).
   19. NEMA 9 - Indoors. Class II, Division 1 or 2. Groups E, R, or G. (Combustible dust).
   20. NEMA 12 - Indoors. Falling Dirt. Falling liquids. Flying dust, lint and fibers. Oil or coolant seepage.
   21. NEMA 13 - Same as NEMA 12 plus oil or coolant spraying or splashing.

## 1.8 SUBMITTALS

A. Shop Drawings (Product Data):
   1. Refer to Division 01 - Submittal Procedures.
   2. Note that for satisfying submittal requirements for Division 26, "Product Data" is usually more appropriate than true "Shop Drawings" as defined in Division 01. However, the expression "Shop Drawings" is generally used throughout Specification.
   3. Submit shop drawings for equipment and systems as requested in respective specification sections. Submittals which are not requested may not be reviewed.
   4. Specifically mark general catalog sheets and drawings to indicate specific items submitted and its correlation to specific designation for product in drawings.
   5. Specifically indicate proper identification of equipment by name and/or number, as indicated in specification and shown on drawings.

6. When manufacturer's reference numbers are different from those specified, provide correct cross-reference number for each item. Clearly mark and note submittal accordingly.
7. Submit complete record of required components when luminaires, equipment and items specified include accessories, parts and additional items under one designation.
8. Include wiring diagrams for electrically powered or controlled equipment.
9. Submit electrical equipment room layouts drawn to scale, including equipment, raceways, accessories and required working clearances. Submit electrical equipment room layouts concurrently with electrical distribution equipment submittals.
10. Where submittals cover products containing non-metallic materials, include "Material Safety Data Sheet" (MSDS) from manufacturer stating physical and chemical properties of components and precautionary considerations required.
11. Submit shop drawings or product data as soon as practicable after signing contracts. Submittals must be approved before installation of materials and equipment.
12. Submittals that are not complete, not permanent, or not properly checked by Contractor, will be returned without review.
13. "Coordination Drawings", which are normally prepared by Contractor to coordinate work among various trades and to facilitate installation, shall not be submitted for Division 26 work unless specifically requested in technical sections. These types of drawings typically include dimensioned piping, ductwork or electrical raceway layouts.
14. Unless specifically requested in Division 26 technical sections, submittals of coordination drawings will be returned without review.

B. Certificates and Inspections:
   1. Obtain and pay for inspections required by authorities having jurisdiction and deliver certificates approving installations to Owner unless otherwise directed.

C. Operation and Maintenance Manuals:
   1. Refer to Division 01 - Operation and Maintenance Data.
   2. Upon completion of work but before final acceptance of system, submit to Architect for approval, 3 copies of operation and maintenance manuals in loose-leaf binders. If "one copy" is larger than 2” thick or consists of multiple volumes, submit only one set initially for review. After securing approval, submit 3 copies to Owner.
   3. Organize manuals by specification section number and furnish table of contents and tabs for each piece of equipment or system.
   4. Manuals shall include the following:
      a. Copies of shop drawings
      b. Manufacturer's operating and maintenance instructions. Include parts lists of items or equipment, with component exploded views and part numbers. Where manufacturer's data includes several types or models, designate applicable type or model.
      c. CD ROM's of O&M data with exploded parts lists where available
      d. Phone numbers and addresses of local parts suppliers and service companies
      e. Internet/WEB page addresses where applicable
      f. Wiring diagrams
      g. Start up and shut down procedure
      h. Factory and field test records
      i. Additional information, diagrams or explanations as designated under respective equipment or systems specification section
   5. Instruct Owner's representative in operation and maintenance of equipment. Instruction shall include complete operating cycle on all apparatus.

6. Furnish O&M manuals and instructions to Owner prior to request for final payment.

D. Record Documents:
   1. Refer to General Conditions of Contract and Division 01 - Project Record Documents. Prepare complete set of record drawings in accordance with Division 01.
   2. Use designated set of prints of Contract Documents as prepared by Architect to mark-up for record drawing purposes.

## 1.9 JOB CONDITIONS

A. Building Access:
   1. Arrange for necessary openings in building to allow for admittance of all apparatus.

B. Coordination:
   1. Equipment provided under other Divisions of these specifications.
      a. Motors
      b. Electrically powered equipment
      c. Electrically controlled equipment
      d. Starters, where specified
      e. Variable frequency drives, where specified
      f. Control devices, where specified
      g. Temperature Control wiring
   2. Provide the following devices required for control of motors or electrical equipment, unless noted otherwise:
      a. Starters
      b. Disconnect devices
      c. Control devices:
         1). Pushbuttons
         2). Pilot lights
         3). Contacts
      d. Conduit, boxes and wiring for Power wiring
      e. Conduit, boxes and wiring for Control wiring, except temperature control wiring
   3. Connect and wire equipment complete and ready to operate according to wiring diagrams furnished by various trades.
   4. Wire starters or other similar control devices furnished by others.
   5. This contractor's drawings and/or specifications show number and HP rating of motors furnished by others, together with their actuating devices. Should any change in size, HP rating, voltage, or means of control be made to any motor or other electrical equipment after Contracts are awarded, Contractor responsible for change shall immediately notify this Contractor. Additional costs due to these changes shall be responsibility of Contractor initiating change.
   6. Equipment and wiring shall be selected and installed for conditions in which it will be required to perform. (i.e., general purpose, weatherproof, rain tight, explosion proof, dust tight, or any other special type as required.)
   7. Comply with local utility motor starting requirements and provide starters for motors furnished by others as specified herein or under various trade sections of those specifications.

C. Cutting and Patching:

1. Refer to General Conditions of the Contract and Division 01 - Cutting and Patching.
2. Perform cutting and patching required for complete installation of systems, unless otherwise noted. Patch and restore work cut or damaged to original condition. This includes openings remaining from removal or relocation of existing system components.
3. Provide materials required for patching unless otherwise noted.
4. Do not pierce beams or columns without permission of Architect and then only as directed. If openings are required through walls or floors where no sleeve has been provided, hole shall be core drilled to avoid unnecessary damage and structural weakening.
5. Where alterations disturb lawns, paving, walks, etc., replace, repair or refinish surfaces to condition existing prior to commencement of work. This may include areas beyond construction limits.

D. Housekeeping and Cleanup:
1. Refer to Division 01 - Closeout Procedures.
2. As work progresses or as directed by Architect, periodically remove waste materials from building and leave area of work broom clean. Upon completion of work, remove tools, scaffolding, broken and waste materials, etc. from site.

### 1.10 WARRANTY

A. Refer to Division 01 for general warranty requirements.

B. Refer to technical sections for warranty requirement for each system.
1. Where no warranty requirements are called out, warrant for 1 year after acceptance by Owner equipment, materials, and workmanship to be free from defect.

C. Repair, replace, or alter systems or parts of systems found defective at no extra cost to Owner.

D. In any case, wherein fulfilling requirements of any guarantee, if this contractor disturbs any work guaranteed under another contract, this contractor shall restore such disturbed work to condition satisfactory to Architect and guarantee such restored work to same extent as it was guaranteed under such other contract.

E. Warranty shall include labor, material, and travel time.

### 1.11 BUILDING SYSTEMS COMMISSIONING:

A. An independent third party Commissioning Agent will document completion of the Mechanical, Fire Suppression, Plumbing, HVAC, Electrical, Communications and Electronic Safety and Security Systems for the project. The Construction Manager and Division Contractors are members of the Commissioning Team and will facilitate completion of the Commissioning process. Refer to section 019113 “Building Systems Commissioning” for the project Commissioning requirements and roles and responsibilities of each member of the Commissioning Team.”

## PRODUCTS

### 1.12 PRODUCT SUBSTITUTIONS

A. Refer to Division 01 - Product Requirements.

# EXECUTION

## 1.13 GENERAL

A. Verify elevations and dimensions prior to installation of materials.

## 1.14 DELIVERY, STORAGE, AND HANDLING

A. Deliver products to the site under provisions of Division 01.

B. Store and protect products under provisions of Division 01.

C. Store in clean, dry space.

D. Maintain factory wrapping or provide cover to protect units from dirt, water, construction debris, and traffic.

E. Handle in accordance with manufacturer's written instructions.

F. Handle carefully to avoid damage to components, enclosure, and finish. Lift only with lugs provided for the purpose.

G. Provide supplemental heat if required to prevent moisture contamination.

## 1.15 FLOOR, WALL, ROOF AND CEILING OPENINGS

A. Coordinate location of openings, chases, furred spaces, etc. with appropriate Contractors. Provide sleeves and inserts that are to be built into structure during progress of construction.

B. Remove temporary sleeves, if used to form openings, prior to installation of permanent materials. Utilize minimum 24 ga galvanized sheet metal for permanent sleeves unless otherwise noted.

C. Provide Schedule 40 carbon steel pipe with integral water stop for steel sleeves required below grade or to exterior.

D. Submit to Structural Engineer for review and approval size and location of core-drilled holes prior to execution.

E. Submit product data and installation details for penetrations of building structure. Include schedule indicating penetrating materials, (steel conduit, PVC conduit, cables, cable tray, etc.), sizes of each, opening sizes and sealant products intended for use.

F. Where penetrations of fire-rated assemblies are involved, seal penetrations with appropriate firestopping systems as specified in Section 26 0593 - Electrical Systems Firestopping.

G. Adhesives and sealants used on the interior of the building shall comply with VOC limits per section 01352 LEED requirements.

H. Submit complete penetration layout drawings showing openings in building structural members including floor slabs, bearing walls, shear walls, etc. Indicate and locate, by dimension, required openings including those sleeved, formed or core drilled. Submit drawings for approval prior to preparing openings in structural member.

I. Provide 2" clearance around penetration openings intended for raceways and cables. Where fire resistant penetrations are required, size openings in accordance with written recommendations of firestopping systems manufacturer.

J. Seal non fire-rated floor penetrations with non-shrink grout equal to Embeco by Master Builders, or urethane caulk, as appropriate.

K. Seal non-rated wall openings with urethane caulk.

L. Where penetrations occur through exterior walls into building spaces, use steel sleeves with integral water stop, similar to type "WS" wall sleeves by Thunderline Corporation. Seal annular space between sleeves and pipe with "Link-Seal" modular wall and casing seals by Thunderline Corporation, or sealing system by another manufacturer approved as equal by Engineer. Sealing system shall utilize Type 316 stainless steel bolts, washers and nuts.

M. Finish and trim penetrations as shown on details and as specified.

N. Provide chrome or nickel plated escutcheons where raceways pass through walls, floors or ceilings and are exposed in finished areas. Size escutcheons to fit raceways for finished appearance. Finished areas shall not include mechanical/electrical rooms, janitor's closets, storage rooms, etc., unless suspended ceilings are specified.

O. In Animal holding and Wash down areas,
   1. Exposed conduit penetrations shall be sealed as follows:
      a. Escutcheons shall not be used when conduits are exposed in finished areas and penetrate finished surfaces.
      b. Cut and patch penetration to within 1/4" of conduit.
      c. Seal openings around conduit and patch work with sprayable, flexible, liquid polyvinyl chloride coating equal to ANDEK "COCOON® 72634-USDA". Sealant shall be installed per manufacturer's application requirements.
      d. ANDEK Corp., 850 Glen Avenue, P.O. Box 392, Moorestown, New Jersey 05857-0392.

   2. Penetrations other than conduits (junction boxes, light fixtures, etc.) including wiring devices shall be sealed as follows:
      a. Seal non-rated opening with silicone sealant.
      b. See drawings for details.
      c. Confirm selected sealant is compatible with paint provided by others prior to application.
      d. Product: One-Part Mildew-Resistant Silicone Sealant: Type S; Grade NS; Class 25; Uses NT, G, A, and as applicable to nonporous joint substances indicated, O; formulated with fungicide; intended for sealing interior joints with nonporous substrates and subject to in-service exposure to conditions of high humidity and temperature extremes; subject to compliance with requirements. Provide one of the following:
         1). 786 Mildew Resistant Silicone Sealant; Dow Corning Corp.
         2). Sanitary 1700 Silicone Sealant; General Electric Co.
         3). 898 Silicone Sanitary Sealant; Pecora Corp.
         4). Tremsil 600; Tremco Corp.
         5). OmniPlus; Sonneborn Building Products Div., Rexnord Chemical Products, Inc.

## 1.16 EQUIPMENT ACCESS

A. Install raceways, junction and pull boxes, and accessories to permit access to equipment for maintenance. Relocate raceways or accessories to provide maintenance access at no additional cost to Owner.

B. Install equipment with sufficient maintenance space for removal, repair or changes to equipment. Provide ready accessibility to equipment and wiring without moving other future or installed equipment.

C. Access doors in walls, chases, or inaccessible ceilings will be provided under Division 08 - Access Doors and Frames, unless otherwise indicated. Access doors for equipment shall provide access for servicing, repairs and/or maintenance.

D. Provide necessary coordination and information to the Trade Contractor under Division 08 - Access Doors and Frames. This information shall include required locations, sizes and rough-in dimensions.

E. Provide access doors in walls, chases or inaccessible ceilings for equipment requiring access for servicing, repairs and maintenance, unless otherwise noted. Access frames and doors shall be as manufactured by Milcor, Incorporated, or similar, of style applicable to surface. Provide access doors used in fire-rated construction with UL label. Provide steel, prime-coated access doors in dry locations. Provide stainless steel access doors for use in ceramic tile walls, toilet rooms, locker rooms, and in areas subject to excessive moisture. Provide access doors of sufficient size to allow complete maintenance. Coordinate location of access doors with General Contractor and rough-in equipment accordingly.

F. Locate electrical outlets and equipment to fit details, panels, decorating or finish at space. Architect reserves right to make minor position changes of outlet locations before work has been installed.

G. Verify door swings before installing room light switch boxes. Install boxes on latch side of door unless otherwise noted

## 1.17 EQUIPMENT SUPPORTS

A. Provide supporting steel not indicated on drawings as required for installation of equipment and materials including angles, channels, beams, hangers, etc.

B. Provide steel shell with plug type concrete anchors for attaching equipment to concrete. Plastic, rawhide or anchors using lead are not allowed.

C. Do not support equipment or luminaires from metal roof decking.

## 1.18 SUPPORT PROTECTION

A. In occupied areas, mechanical and electrical rooms and areas requiring normal maintenance access, guard certain equipment to protect personnel from injury.

B. Provide minimum 1/2” thick Armstrong Armaflex insulation or similar product applied with Armstrong 520 adhesive on lower edges of equipment, including bus duct, cable tray, pull boxes and electrical supporting devices suspended less than 7 ft above floors, platforms or catwalks in these areas.

C. Protect threaded rods or bolts at supporting elements as described above. Trim threaded rods or bolts such that they do not extend beyond supporting element.

## 1.19 LEAD SHIELDING

A. Wherever installation of this contractor's equipment destroys radiological integrity of wall, floor, or ceiling, this contractor shall be responsible to provide suitable lead shielding to restore that integrity. Coordinate these requirements with General Contractor.

## 1.20 ELECTRICAL SYSTEMS IDENTIFICATION

A. Refer to Section 26 0553 – Electrical Systems Identification.

## 1.21 ACCEPTANCE TESTING

A. Contractor shall engage testing and inspection agency to perform acceptance tests. Equipment to be tested is noted as "Testing by Testing Agency" in technical specification sections. Perform in accordance with Section 26 0812 – Power Distribution Acceptance Tests and Section 26 0813 – Power Distribution Acceptance Test Tables.

B. When testing is to be witnessed by Architect/Engineer or Inspector, notify them at least 10 days prior to testing date.

C. When equipment or systems fail to meet minimum test requirements, replace or repair defective work or materials as necessary and repeat inspection and test until equipment or systems meet test requirements. Make repairs with new materials.

D. Contractor is responsible for certifying in writing equipment and system test results. Certification shall include identification of portion of system tested, date, time, test criteria and name and title of person signing test certification documents.

E. Maintain copies of certified test results, including those for any failed tests, at project site. At completion of project, include copies of test records and certifications in O&M Manuals.

## 1.22 START-UP

A. Systems and equipment shall be started, tested, adjusted, and turned over to Owner ready for operation. This includes "Owner-Furnished, Contractor-Installed" (OFCI) and "Contractor-Furnished, Contractor-Installed" (CFCI) systems and equipment.

B. Follow manufacturer's pre-start-up checkout, start-up, trouble shooting and adjustment procedures.

C. Contractor shall provide services of technician/mechanic knowledgeable in start-up and checkout of types of systems and equipment on project.

D. Provide start-up services by manufacturer's representative where specified or where Contractor does not have qualified personnel.

E. Coordinate start-up with all trades.

## 1.23 CLEANING

A. Clean systems after installation is complete.

B. Vacuum debris from panelboards, switchboards, motor starter and disconnect switch enclosures, junction boxes and pull boxes two weeks before energization and again prior to completion.

C. Where louvers are provided in switchgear or transformer enclosures, vacuum louvers free of dust and dirt.

D. Clean luminaire lenses and lamps at time of installation and clean lens exteriors just prior to final inspection.

E. Thoroughly clean equipment of stains, paint spots, dirt and dust. Remove temporary labels not used for instruction or operation.

F. During construction, maintain indoor air quality per general contractors IAQ plan for LEED credit.

## 1.24 CONSTRUCTION WASTE MANAGEMENT

A. Construction waste management shall be managed in accordance with provisions of Section 01524 Construction Waste Management. Documentation shall be submitted to satisfy the requirements of that section.

**END OF SECTION**

# SECTION 26 0513.16 MEDIUM-VOLTAGE, SINGLE- AND MULTI-CONDUCTOR CABLES

## PART 1 - GENERAL

### 1.1 RELATED WORK

A. Section 26 0526 – Grounding and Bonding for Electrical Systems

B. Section 26 0553 – Electrical Systems Identification

C. Section 26 0593 – Electrical Systems Firestopping

D. Section 26 0812 – Power Distribution Acceptance Tests

E. Section 26 0813 – Power Distribution Acceptance Test Tables

### 1.2 REFERENCE

A. Work under this Section is subject to requirements of Contract Documents including General Conditions, Supplementary Conditions, and sections under Division 01 - General Requirements.

### 1.3 DESCRIPTION

A. Section includes cables and related splices, terminations, and accessories for medium-voltage electrical distribution systems.

B. Cables are for use in wet or dry locations applications.

C. Conductors shall be rated to operate at conductor temperature of 105°C for continuous normal operation, 140°C for emergency overload conditions, and 250°C for short circuit conditions, based on 40°C maximum ambient temperature.

D. Conductor sizes in Section are based on copper wire and only copper wire shall be used.

### 1.4 REFERENCE STANDARDS

A. AEIC CS 8 – Specification for Extruded Dielectric Shielded Power Cables Rated 5 through 46kV.

B. IEEE 48 – Standard Test Procedures and Requirements for Alternating-Current Cable Terminations 2.5kV through 765kV.

C. IEEE 386 – Standard for Separable Insulated Connector Systems for Power Distribution Systems above 600 V (ANSI).

D. IEEE 404 – Standard for Extruded and Laminated Dielectric Shielded Cable Joints Rated 2500 – 500000 V (ANSI)

E. IEEE 576 – Recommended Practice for Installation, Termination, and Testing of Insulated Power Cable as Used in Industrial and Commercial Applications (ANSI)

F. ICEA S-93-639 – 5-46kV Shielded Power Cables for the Distribution and Transmission of Electrical Energy

G. ICEA S-94-649 – 5-46kV Concentric Neutral Cables Rated 5000 to 46000 Volts

H. ICEA S-97-682 – Utility Shielded Power Cables Rated 5000 to 46000 Volts

I. NFPA 70 – National Electrical Code

J. UL 1072 – Medium-Voltage Power Cable

## 1.5 SUBMITTALS

A. Product Data: For each type of cable indicated. Include splices and terminations for cable and cable accessories.
   1. Include cable drawings with the following data:
      a. Longitudinal cutback and cross-sectional view of cable.
      b. Identification and structure of cable components.
      c. Dimensions of cable components in English and SI units.

B. Material Certificates: For each cable and accessory type, signed by manufacturer.

C. Manufacturer Testing Certificate: For each type and voltage class of cable indicated.

D. Certified Field Quality Control Test Reports per requirements in Section 26 0812 – Power Distribution Acceptance Tests and Section 26 0813 – Power Distribution Acceptance Test Tables for each type and voltage class of cable indicated. Indicate applicable standards compliance. Interpret test results and corrective action taken for compliance with specification requirements.

E. Qualification Data: For testing agency.

F. Manufacturer's Installation Instructions: Indicate application conditions and limitations of use stipulated by product testing agency. Include instructions for storage, handling, protection, examination, preparation, and installation.

G. Installation Guide: Include the following:
   1. Maximum allowable pulling tension (in pounds and newtons)
   2. Minimum allowable bending radius
   3. Recommended pulling compounds
   4. Splicing and termination instructions with diagrams, dimensions, and material lists
   5. Weight per 1,000 ft
   6. Standard "packaging" of reels (i.e., lengths, lagging, banding, etc.)
   7. Reactance and AC resistance (ohms to neutral) of each size and voltage class of cable, both in magnetic and non-magnetic duct, based on 3-1/C cables or 1-3/C cable in one duct.

H. Closeout Submittals:
   1. Project Record Documents:
      a. Record actual locations of cables, splices, and terminations.
   2. Operation and Maintenance Data:
      a. Include manufacturer's recommended operating instructions, maintenance procedures and intervals, and preventive maintenance instructions.

## 1.6 QUALITY ASSURANCE

A. Installer: Engage cable splicer, trained and certified by splice material manufacturer, to install, splice, and terminate medium-voltage cable, having not less than 3 yrs experience as licensed electrician.

B. Regulatory Requirements:

1. Electrical Components, Devices, and Accessories: Listed and labeled as defined in NFPA 70, Article 100, by testing agency acceptable to authorities having jurisdiction, and marked for intended use.
2. Furnish products listed and classified by Underwriters Laboratories, Inc., as suitable for purpose specified and indicated.

C. Source Limitations: Obtain cables and accessories through one source from single manufacturer.

D. All cables shall be of a single type and configuration. Date of manufacture shall not precede contract date by more than one year.

### 1.7 DELIVERY, STORAGE, AND HANDLING

A. Coordinate with manufacturer to provide protective covering over cable and reel to prevent damage during shipping, storage, or handling.

B. Store in clean, dry space. Protect from dirt, fumes, water, corrosive substances, and construction debris.

### 1.8 WARRANTY

A. Refer to Division 01 and Section 26 0000 – General Electrical Requirements for general warranty requirements.

B. Manufacturer shall provide standard 1 yr warranty against defects in materials and workmanship for products specified in this Section. Warranty period shall begin on date of substantial completion.

## PART 2 - PRODUCTS

### 2.1 MANUFACTURERS

A. Cables:
1. General Cable
2. Okonite Company
3. Southwire Company

B. Cable Splicing and Terminating Products and Accessories:
1. Raychem Corporation (TE Connect)
2. Cooper Power Systems Division of Eaton Corporation
3. Thomas & Betts Corporation/Elastimold Division of ABB
4. 3M; Electrical Products Division

### 2.2 CABLES

A. Cable Type: MV105

B. Comply with UL 1072, AEIC CS 8, ICEA S-94-649

C. Conductor: Copper

D. Conductor Stranding: Concentric lay, Class B

E. Strand Filling: Conductor interstices are filled with impermeable compound

F. Conductor Insulation: Ethylene-propylene-rubber

G. Voltage Rating: 5kV

H. Insulation Thickness: 133 percent insulation level

I. Shielding: 5 mil copper tape, helically applied over semiconducting insulation shield with 25% overlap

J. Shielding and Jacket: Corrugated copper drain wires embedded in extruded, chlorinated, polyethylene jacket

K. Cable Jacket: Flame-retardant, chlorinated polyethylene, FR-CPE. Color: black, unless otherwise designated

L. Cable lengths shall be supplied with factory-installed, moisture-proof end seals on conductors on each end. Cable seals shall be rubber or plastic caps, and shall prevent moisture from seeping into cable ends.

M. Each cable reel shall be tagged with the following:
   1. Manufacturer
   2. Cable Size
   3. Cable Type
   4. Voltage Class
   5. Manufacture Date
   6. Cable Length
   7. Tolerances
   8. Reel Number
   9. Customer Order No.
   10. Customer Name

N. Surface Marking:
   1. Cables shall be permanently printed (or imprinted) on jacket surface at regular intervals over entire length of cable with the following:
      a. Manufacturer's name
      b. Conductor size
      c. Voltage class
      d. Insulation type
      e. UL designation

O. Cable shield shall be capable of withstanding fault current indicated on drawings for 1/10 second.

## 2.3 SPLICE KITS

A. Connectors and Splice Kits: Comply with IEEE 404; type as recommended by cable or splicing kit manufacturer for application.

B. Splicing Products: As recommended, in writing, by splicing kit manufacturer for specific sizes, ratings, and configurations of cable conductors. Include components required for complete splice, with detailed instructions.
   1. Combination tape and cold-shrink-rubber sleeve kit with rejacketing by cast-epoxy-resin encasement or other waterproof, abrasion-resistant material.

2. Premolded, cold-shrink-rubber, in-line splicing kit.
3. Premolded EPDM splicing body kit with cable joint sealed by interference fit of mating parts and cable.

## 2.4 SOLID TERMINATIONS

A. Shielded-Cable Terminations: Comply with the following classes of IEEE 48. Insulation class is equivalent to that of cable. Include shield ground strap for shielded cable terminations.
   1. Class 1 Terminations: Modular type, furnished as kit, with stress-relief tube; multiple, molded-silicone rubber, insulator modules; shield ground strap; and compression-type connector.
   2. Class 2 Terminations, Indoors: Kit with stress-relief tube, nontracking insulator tube, shield ground strap, and compression-type connector. Include silicone-rubber tape, cold-shrink-rubber sleeve, or heat-shrink plastic-sleeve moisture seal for end of insulation whether or not supplied with kits.
   3. Class 3 Terminations: Kit with stress cone and compression-type connector.

B. Cable Terminations:
   1. Product of one manufacturer and furnished in kit form compatible with insulation and conductor material for cable terminated.

C. Connecting Lugs:
   1. Connectors and terminals: Copper with uniform compression over entire contact surface.
   2. Terminals on conductors: Solderless terminal lugs.

## 2.5 SEPARABLE INSULATED CONNECTORS

A. Separable connectors are not to be used on this project without engineering approval.

## 2.6 SOURCE QUALITY CONTROL

A. Test and inspect cables according to Section 26 0812 – Power Distribution Acceptance Tests and Section 26 0813 – Power Distribution Acceptance Test Tables.

# PART 3 - EXECUTION

## 3.1 INSTALLATION

A. Install cables according to IEEE 576.

B. Pull Conductors: Do not exceed manufacturer's recommended minimum installation temperature, maximum pulling tensions, and sidewall pressure values.
   1. Where necessary, use manufacturer-approved pulling compound or lubricant that will not deteriorate conductor or insulation.
   2. Use pulling means, including fish tape, cable, rope, and basket-weave cable grips that will not damage cables and raceways. Do not use rope hitches for pulling attachment to cable.
   3. Cut off cable damaged by cable grips or pulling make-ups so as to provide clean, undamaged cable for termination. Continuously record pulling tension during installation.

C. Install exposed cables parallel and perpendicular to surfaces of exposed structural members and follow surface contours where possible.

D. Support cables in handholes and manholes from walls on heavy-duty, non-metallic cable rack arms, at least 3" above the floor. Support cables with reinforced nylon cradles. Anchor to wall with stainless steel anchor bolts.

1. Install compression connectors with hydraulic compression tool on 600V neutral/ground conductor.

E. In manholes, handholes, pull boxes, junction boxes, and cable vaults, train cables around walls by longest route from entry to exit and support cables at intervals adequate to prevent sag. Fill lowest ducts first, avoid covering or blocking duct entrances and allow space for future cable installation.

F. Cut cable in clean, dry environment. Seal cut ends with waterproof seal immediately after cutting. Maintain a seal during and after pulling.

G. Install cable splices at pull points (accessible locations) and elsewhere as indicated; use standard kits.

H. Install terminations at ends of conductors and seal multi-conductor cable ends with standard kits. Do not install exterior terminations during inclement weather or damp atmospheric conditions.

I. Install stress cones at cable splices and terminations, grounded per cable and connector manufacturer recommendations.

J. Check phase rotation before connections are made to existing circuits. Clearly letter cable terminations. Identify phases with phase designations lettered on terminal boxes and other terminations throughout the system.

K. Seal around cables passing through fire-rated elements according to Section 26 0593 – Electrical Systems Firestopping.

L. Ground shields of shielded cable at terminations, splices, and separable insulated connectors. Ground metal bodies of terminators, splices, cable and separable insulated-connector fittings, and hardware. For grounding requirements, refer to Section 26 0526 – Grounding and Bonding for Electrical Systems.

M. Identify cables according to Section 26 0553 – Electrical Systems Identification.

## 3.2 FIELD QUALITY CONTROL

A. Perform cable acceptance tests on cable circuits after installing cables and before electrical circuitry has been energized. Splices and terminations required as part of this project are to be completed and acceptance tested as part of cable tests. For cables not spliced or terminated as part of project, ends should be clean, dry and long enough to eliminate leakage from conductor to ground along outer surface of cable.

B. Perform acceptance tests and damage investigations under constant supervision of Owner's representative. Contractor shall coordinate and provide labor, material, equipment, and services necessary to test each completed cable circuit.

C. Remove and replace defective cables and retest as required.

D. Refer to Section 26 0812 – Power Distribution Acceptance Tests and Section 26 0813 – Power Distribution Acceptance Test Tables for visual and mechanical inspection and electrical tests. Certify compliance with test parameters.

**END OF SECTION**

# SECTION 26 0516 - OWNER-FURNISHED EQUIPMENT

## PART 1 - GENERAL

### 1.1 REFERENCE

A. Work under this Section is subject to requirements of Contract Documents including General Conditions, Supplementary Conditions, and sections under Division 01 General Requirements.

### 1.2 DESCRIPTION

A. Section includes electrical connection(s) to Owner-purchased pieces of equipment, which are required in construction.

B. Owner-furnished equipment requiring work by Contractor is specified in the following Sections:

C. Contractor shall be responsible for receipt of equipment from Owner, storage after receipt, installation, and electrical connection.

D. Owner-furnished equipment requiring work by the Contractor is shown on the drawings and schedules.

E. Owner-furnished, Contractor-installed equipment is labeled OFCI.

### 1.3 SUBMITTALS

A. Shop Drawings: Owner-supplied shop drawings of equipment furnished by Owner.

B. Manufacturer's Installation Instructions:
   1. Indicate application conditions and limitations of use stipulated by product testing agency. Include instructions for storage, handling, protection, examination, preparation, installation, and starting of product.

### 1.4 QUALITY ASSURANCE

A. Regulatory Requirements:
   1. Comply with NFPA 70 for components and installation.
   2. Furnish products listed and classified by Underwriters Laboratories, Inc., as suitable for purpose specified and indicated.

### 1.5 DELIVERY, STORAGE, AND HANDLING

A. Store in clean, dry space. Maintain factory unopened packaging until ready for installation.

### 1.6 WARRANTY

A. Refer to Division 01 and Section 26 0000 – General Electrical Requirements for general warranty requirements.

B. Manufacturer shall provide standard 1 yr written warranty against defects in materials and workmanship for products specified in this Section. Warranty period shall begin on date of substantial completion.

## PART 2 - PRODUCTS

### 2.1 (NOT APPLICABLE TO THIS SECTION)

## PART 3 - EXECUTION

### 3.1 INSTALLATION

A. Provide labor, materials and electrical connections for Owner-furnished equipment in accordance with contract drawings. Contractor is responsible for a complete installation of Owner-furnished equipment.

B. Install and connect Owner-furnished equipment as though it had been purchased by Contractor.
   1. This shall include:
      a. Receiving equipment at jobsite
      b. Rigging and setting equipment in place
      c. Making electrical connections
      d. Starting
      e. Testing

C. Install equipment in accordance with manufacturer's installation instructions.

D. Maintain equipment until facility is accepted by Owner.

E. Review Owner-supplied shop drawings of Owner-furnished equipment to ascertain that necessary labor and materials have been provided to install equipment and complete the system it serves.

**END OF SECTION**

# SECTION 26 0519 LOW-VOLTAGE ELECTRICAL POWER CONDUCTORS AND CABLES

## PART 1 - GENERAL

### 1.1 RELATED WORK

A. Section 26 0529 - Hangers and Supports for Electrical Systems

B. Section 26 0553 - Electrical Systems Identification

C. Section 26 0593 - Electrical Systems Firestopping

D. Section 26 0812 - Power Distribution Acceptance Tests

E. Section 26 0813 - Power Distribution Acceptance Test Tables

### 1.2 REFERENCE

A. Work under this section is subject to requirements of Contract Documents including General Conditions, Supplementary Conditions, and sections under Division 01 General Requirements.

### 1.3 DESCRIPTION

A. Section includes conductors and cables rated 600 V and less, connectors, splices, and terminations rated 600 V and less, sleeves and sleeve seals for cables.

B. Conductor and conduit sizes in these contract documents are based on copper wire, and only copper wire shall be used.

### 1.4 REFERENCE STANDARDS

A. ASTM A 53/A 53M – Specification for Pipe, Steel, Black and Hot-Dipped, Zinc-Coated Welded and Seamless.

B. ASTM B 1 – Standard Specification for Hand-Drawn Copper Wire.

C. ASTM B 8 – Standard Specification for Concentric-Lay-Stranded Copper Conductors, Hard, Medium-Hard, or Soft.

D. NEMA WC 3 – Rubber-Insulated Wire and Cable for the Transmission and Distribution of Electrical Energy (ICEA S-19-81).

E. NEMA WC 5 – Thermoplastic-Insulated Wire and Cable for the Transmission and Distribution of Electrical Energy (ICEA S-61-402).

F. NEMA WC 70 – Non-Shielded Power Cable 2000 V or less for the Distribution of Electrical Energy (ICEA S-95-668).

G. NFPA 70 – National Electrical Code.

H. UL 44 – Thermoset-Insulated Wires and Cables.

I. UL 83 – Thermoplastic-Insulated Wires and Cables.

J. UL 486A-486B – Wire Connectors.

K. UL 486C – Splicing Wire Connectors.

L. UL 486D – Standard for Insulated Wire Connector Systems for Underground Use or in Damp or Wet Locations.

M. UL 486E – Standard for Equipment Wiring Terminals for Use with Aluminum and/or Copper Conductors.

### 1.5 SUBMITTALS

A. Product Data: For each type of product indicated.

B. Manufacturer's Installation Instructions: Indicate application conditions and limitations of use stipulated by product testing agency. Include instructions for storage, handling, protection, examination, preparation, and installation.

C. Test Reports: Indicate field test and inspection procedures and interpret test results and corrective action taken for compliance with specification requirements.

D. Closeout Submittals:
   1. Project Record Documents:
      a. Record actual locations of components and circuits.
   2. Operation and Maintenance Data:
      a. Include manufacturer's recommended operating instructions, maintenance procedures and intervals, and preventive maintenance instructions.

### 1.6 QUALITY ASSURANCE

A. Regulatory Requirements:
   1. Comply with NFPA 70 for components and installation.
   2. Furnish products listed and classified by Underwriters Laboratories, Inc., as suitable for purpose specified and indicated.

B. Wire and cable boxes and reels shall bear the date of manufacture.
   1. Date of manufacture shall not precede contract date by more than one year.

### 1.7 DELIVERY, STORAGE, AND HANDLING

A. Store in clean, dry space. Protect from dirt, fumes, water, corrosive substances, and construction debris.

### 1.8 WARRANTY

A. Refer to Division 01 and Section 26 0000 – General Electrical Requirements for general warranty requirements.

B. Manufacturer shall provide standard 1 yr warranty against defects in materials and workmanship for products specified in this Section. Warranty period shall begin on date of substantial completion.

## PART 2 - PRODUCTS

### 2.1 MANUFACTURERS

A. Cerrowire

B. General Cable Corporation

C. Senator Wire & Cable Company

D. Southwire Company

E. Approved equal

## 2.2 DESCRIPTION

A. NEMA WC 70; single copper conductor insulated wire; 600V rated insulation; 90°C maximum operating temperature for dry and wet or damp locations.
   1. Thermoplastic-insulated wires and cables: NEMA WC 5, UL 83; Type THHN, THWN, THHW.
   2. Thermoset-insulated wires and cables: NEMA WC 3, UL 44; Type XHHW-2.

## 2.3 REMOTE CONTROL AND SIGNAL CIRCUITS

A. Class 1
   1. Copper conductor, single insulated wire.
   2. Insulation type THHN, THHW rated 90°C, 600 V insulation class.
   3. Type XHHW-2 for ambient temperature less than 32°F.
   4. UL 83 listed, ASTM B 1 for solid conductors; ASTM B 8 for stranded conductors.

B. Classes 2 and 3
   1. Copper conductor, multiple twisted conductors covered with an overall non-metallic jacket unless otherwise noted.
   2. Insulation type XLE, rated 105°C, 300 V insulation class.
   3. UL listed for use in space in which circuits will be installed.

## 2.4 CONNECTORS, SPLICES, AND TERMINALS

A. Manufacturers:
   1. AFC Cable Systems, Inc.
   2. Burndy Division of Hubbell Incorporated
   3. Hubbell Power Systems, Inc.
   4. Ideal Industries, Inc.
   5. O-Z/Gedney; EGS Electrical Group LLC.
   6. 3M; Electrical Products Division
   7. Thomas and Betts Division of ABB
   8. Tyco Electronics Corp.
   9. Approved equal

B. Description: UL 486A-486B, UL 486C, UL 486D, UL 486E; factory-fabricated connectors, splices, and terminals of size, ampacity rating, material, type, and class for application and service indicated.

## 2.5 TERMINATIONS

A. Compression set, bolted or screw type lug, or direct to bolted or screw type terminal.

### 2.6 PLASTIC CABLE TIES

A. Nylon or approved; locking type; metallic ties not permitted.

## PART 3 - EXECUTION

### 3.1 INSTALLATION OF CONDUCTORS AND CABLES

A. Install conductors in a raceway system, unless otherwise specified or indicated.

B. Install conductors only after:
   1. Building interior is enclosed and weather tight
   2. Mechanical work likely to damage conductors has been completed
   3. Raceway installation is complete and supported

C. Pull conductors into raceway at same time.

D. Neatly train and lace conductors inside boxes, equipment, and panelboards.

E. Conceal cables in finished walls, ceilings, and floors, unless otherwise indicated.

F. Use manufacturer-approved pulling compound or lubricant where necessary; compound used must not deteriorate conductor or insulation. Do not exceed manufacturer's recommended maximum pulling tensions and sidewall pressure values.

G. Use pulling means, including fish tape, cable, rope, and basket-weave wire/cable grips that will not damage cables or raceway.

H. Provide adequate support for conductors not in raceway. Do not support conductors from ceiling grid or from accessible ceiling support systems.

I. Support cables and conductors in vertical raceways per requirements in Section 26 0529 - Hangers and Supports for Electrical Systems.

J. Identify and color-code conductors and cables according to Section 26 0553 - Electrical Systems Identification.

K. Wiring at Outlets: Install conductor at each outlet, with minimum 12" of slack.

L. Limit conduit fill to a maximum of 9 current-carrying conductors.

M. Install stranded conductors where conductors terminate in crimp type lugs. Do not place bare stranded conductors directly under terminal screws.

### 3.2 CONDUCTOR MATERIAL APPLICATIONS

A. Feeders and Branch Circuits: Solid for #12 AWG and smaller; stranded for #10 AWG and larger.

B. Minimum conductor sizes shall be as follows:
   1. #12 AWG – Branch circuits of any kind.
   2. #14 AWG – Remote control and signal systems, fire alarm system.

C. Branch wiring length limitations:
   1. 208Y/120 V circuits over 100' in length: Increase wire size one size for each 100' of length. Increase conduit size as required.

2. 480Y/277 V circuits over 150' in length: Increase wire size one size for each 150' of length. Increase conduit size as required.

## 3.3 CONDUCTOR INSULATIONS AND MULTICONDUCTOR CABLE APPLICATIONS AND WIRING METHODS

A. Feeders: Type THHW, THWN, XHHW-2, rated 75°C for wet locations, single conductors in raceway.

B. Branch Circuits: Type THHN, XHHW-2, rated 90°C for dry and wet or damp locations, single conductors in raceway.

C. Wiring in Fluorescent Fixture Channels: Type THHN, rated 90°C for dry and damp locations, single conductors.

D. Cord Drops and Portable Appliance Connections: Type SO, hard service cord with stainless-steel, wire-mesh strain relief device at terminations to suit application.

## 3.4 REMOTE CONTROL AND SIGNAL CIRCUITS

A. Sizing – #14 AWG minimum.

B. Installation:
1. Install cables in cable tray and cable rings.
2. Provide protection for exposed cables where subject to damage.
3. Support cables above accessible ceilings; do not rest on ceiling tiles.
4. Use suitable cable fittings and connectors.

## 3.5 CONNECTORS, SPLICES AND TERMINALS

A. Connectors:
1. Except where equipment is furnished with bolted or screw type lug, use compression set pressure connectors with insulating covers. Use compression tools and die compatible with connectors being installed.
2. Use compression-set type with application of insulating tape, pre-stretched or heat-shrinkable insulating tubing for splices and taps of #8 AWG conductors and larger. Install with hydraulic compression tool.
3. Use pre-insulated "twist-on" connectors with integral spring for splices and taps of #10 AWG normal power conductors and smaller.
4. Use compression-set, insulated type for splices of #10 AWG and smaller conductors serving life safety loads. "Twist-on" connectors are not allowed in life safety circuits.
5. Tighten electrical connectors and terminals according to manufacturer's published torque-tightening values. If manufacturer's torque values are not indicated, use those specified in UL 486A-486B.

B. Splices:
1. Splice wires and cable only in accessible locations such as within junction boxes.
2. Make splices to carry full capacity of conductors with no perceptible temperature rise.
3. Splices are to be made with compression barrel connector where no taps exist or allowance for future taps is being made.
4. Where the splice includes provisions for taps, use Burndy insulated Unitap. Locate in pull or junction box sized for all conductors to be spliced and tapped.

5. Make below-grade splices in manholes and handholes watertight with pre-stretched or heat-shrinkable insulating tubing, or resin-filled insulator.
6. Use electrical tape to build up insulation level equivalent to cable insulation and cover with not less than two half-lapped layers of plastic electrical tape, for joints, taps, and splices of #1 AWG conductors and larger.
7. Plastic snap-on or piercing type mechanical splice insulators are not allowed.
8. Make splices and taps that are compatible with conductor material and that possess equivalent or better mechanical strength and insulation ratings than unspliced conductors.

C. Terminals:
1. All terminals are to be compression type.
2. Train wires to eliminate fanning of stands, crimp with proper tool and die.
3. Insulate ends of spare conductors with electrical tape and identify spare circuit number where appropriate.
4. Eye type crimped terminal for removable screw type terminal. Forked torque terminal when screw terminal cannot be removed.
5. Torque screw termination per manufacturer's recommended values.
6. Terminate motors connections using the following methods:
   a. 300V and below: Use compression-set, insulted eye terminal for screw lug connections or barrel type cable to cable connections.
   b. Above 300V: Use 3M 5300 series insulated motor lead splicing kit.

## 3.6 CABLE TIES

A. Neatly bundle conductors and cables together for support. Size cable ties sufficiently to accommodate the multiple cables being supported.

## 3.7 FIELD QUALITY CONTROL

A. Test 600 volt conductors and cables per requirements in Sections 26 0812 – Power Distribution Acceptance Tests and 26 0813 – Power Distribution Acceptance Test Tables.

B. Interpret test results in writing and submit to Engineer.

C. Replace conductors and cables that are found defective, at no expense to Owner.

**END OF SECTION**

# SECTION 26 0526 GROUNDING AND BONDING FOR ELECTRICAL SYSTEMS

## PART 1 - GENERAL

### 1.1 RELATED WORK

A. Section 26 0812 - Power Distribution Acceptance Tests

B. Section 26 0813 - Power Distribution Acceptance Test Tables

### 1.2 REFERENCE

A. Work under this Section is subject to requirements of Contract Documents including General Conditions, Supplementary Conditions, and sections under Division 01 General Requirements.

### 1.3 DESCRIPTION

A. Section includes methods and materials for grounding systems and equipment, as required by State Codes, NFPA 70, applicable portions of other NFPA codes, as indicated herein.
   1. Common ground bonding with lightning protection system.

B. Maximum resistance to ground shall be less than 5 ohms.

### 1.4 REFERENCE STANDARDS

A. TIA-607-B – Generic Telecommunications Bonding and Grounding (Earthing) for Customer Premises

B. ASTM B 3 – Specification for Soft or Annealed Copper Wire

C. ASTM B 8 – Specification for Concentric-Lay-Stranded Copper Conductors, Hard, Medium-Hard or Soft

D. ASTM B 33 – Specification for Tinned Soft or Annealed Copper Wire for Electrical Purposes

E. IEEE C2 – National Electrical Safety Code (ANSI)

F. NETA MTS – Maintenance Testing Specifications

G. NFPA 70 – National Electrical Code

H. NFPA 70B – Recommended Practice for Electrical Equipment Maintenance

I. NFPA 780 – Lightning Protection Systems

J. UL 96 – Lightning Protection Components

K. UL 467 – Grounding and Bonding Equipment

### 1.5 SUBMITTALS

A. Product Data: For each type of product indicated.

B. Field Quality-Control Test Reports:
   1. Indicate field test and inspection procedures and interpret test results and corrective action taken for compliance with specification requirements.
   2. Test reports of resistance to earth. Each test report shall include:
      a. Date of test, soil moisture content, and soil temperature
      b. Test operator
      c. Instrument or other test equipment used
      d. Electrode designation or location
      e. Ground impedance in ohms
      f. Assumptions made - if required

C. Closeout Submittals:
   1. Operation and Maintenance Manuals: Include the following:
      a. Instructions for periodic testing and inspection of grounding system.
         1) Instructions to perform tests to determine if ground resistance or impedance values remain within specified maximums, and instructions shall recommend corrective action if they do not.
         2) Include recommended testing intervals.

## 1.6 QUALITY ASSURANCE

A. Regulatory Requirements:
   1. Electrical Components, Devices, and Accessories: Listed and labeled as defined in NFPA 70.
   2. Comply with UL 467 for grounding and bonding materials and equipment.

## 1.7 DELIVERY, STORAGE, AND HANDLING

A. Store products in clean, dry space. Protect from dirt, fumes, water, corrosive substances, and construction debris.

## 1.8 WARRANTY

A. Refer to Division 01 and Section 26 0000 – General Electrical Requirements for general warranty requirements.

B. Manufacturer shall provide standard 1 yr written warranty against defects in materials and workmanship for products specified in this Section. Warranty period shall begin on date of substantial completion.

# PART 2 - PRODUCTS

## 2.1 CONDUCTORS

A. Insulated Conductors: Copper wire or cable insulated for 600 V unless otherwise required by applicable Code or authorities having jurisdiction, insulation color: green.

B. Bare Copper Conductors:
   1. Solid Conductors: ASTM B 3.
   2. Stranded Conductors: ASTM B 8.
   3. Tinned Conductors: ASTM B 33.

4. Counterpoise and Bonding Conductor: Bare stranded conductor, size as indicated on drawings.

C. Grounding Bus: Horizontal rectangular bars of annealed copper, 1/4" by 2" in cross section; with insulators, length as indicated on drawings. Minimum length is 24".

## 2.2 CONNECTORS

A. Listed and labeled by a nationally recognized testing laboratory acceptable to authorities having jurisdiction for applications in which used, and for specific types, sizes, and combinations of conductors and other items connected.

B. Bolted Connectors for Conductors and Pipes: Copper or copper alloy, bolted pressure-type, with at least two bolts.
   1. Pipe Connectors: Clamp type, sized for pipe.

C. Welded Connectors: Exothermic-welding kits of types recommended by kit manufacturer for materials being joined and installation conditions.

D. Compression Connectors: Irreversible type.

## 2.3 GROUNDING ELECTRODES

A. Ground Rods: Copper-clad, 3/4" in diameter by 10 ft in length.

# PART 3 - EXECUTION

## 3.1 APPLICATIONS

A. Exposed Bonding Conductors: Install solid conductor for #6 AWG and smaller and stranded conductors for #4 AWG and larger, unless otherwise indicated.

B. Equipment Grounding Conductors: Install solid conductor for #12 AWG and smaller and stranded conductors for #10 AWG and larger. Conductors are to have green insulation for #10 AWG and smaller and identified with green tape at terminations, boxes and splices for sizes #8 AWG and larger.

C. Underground Grounding Conductors: Install bare copper conductor. Sized as indicated on drawings.
   1. Bury at least 24" below grade.
   2. Ductbank Grounding Conductor: Bury 12" above ductbank when indicated as part of ductbank installation.

D. Grounding Bus: Install in electrical and communications rooms, in rooms housing service equipment.
   1. Install bus on insulated spacers 1", minimum, from wall; 6" above finished floor in locations as indicated on drawings.

E. Conductor Terminations and Connections:
   1. Pipe and Equipment Grounding Conductor Terminations: Bolted connectors
   2. Underground Connections: Welded connectors, except at test wells and as otherwise indicated
   3. Connections to Ground Rods at Test Wells: Bolted connectors
   4. Connections to Structural Steel: Welded connectors

## 3.2 EQUIPMENT GROUNDING

A. Install insulated equipment grounding conductors with feeders and branch circuits. Install for each branch circuit neutral originating from panelboards, including lighting circuits.

B. Install insulated equipment grounding conductors with the following items, in addition to those required by NFPA 70:
   1. Feeders and branch circuits
   2. Lighting circuits
   3. Receptacle circuits
   4. Single-phase motor and appliance branch circuits
   5. Three-phase motor and appliance branch circuits
   6. Flexible raceway runs
   7. Armored and metal-clad cable runs

C. Duplex receptacles of any amperage: Install separate jumper between grounding terminal on device and metallic box.

D. Size of equipment grounding conductors for branch circuits: As indicated in NFPA-70, except minimum size shall be #12 AWG.

E. Size of branch panel feeder originating at switchboards/switchgear: As indicated in NFPA-70, except in no instance smaller than #8 AWG.

F. Signal and Communication Equipment: For telephone, alarm, voice and data, and other communication equipment, install insulated grounding conductor (sized as indicated on drawings) in raceway from grounding electrode system to each service location, terminal cabinet, wiring closet, and central equipment location.
   1. Telecom Grounding Bus: Terminate grounding conductor on grounding bus located in telecom room.]
   2. Terminal Cabinets: Bond cabinet grounding terminal to telecom grounding bus.
   3. Cable Tray: Bond cable tray to telecom grounding bus.

G. Install equipment grounding conductor from secondary side of each transformer to grounding electrode system as required for separately derived system.

H. Install grounding for service entrance equipment room consisting of ground bus, ground conductors, and copperclad grounding rods arranged as indicated on drawings.

I. Install grounding conductor to luminaires hanging form conduit swivel hangers.

## 3.3 SEQUENCING, SCHEDULING

A. Permanently attach service grounds before permanent building service is energized.

B. Permanently attach equipment grounds prior to energizing equipment.

## 3.4 INSTALLATION

A. Connections: Exposed and visible for inspection at all times. Do not install insulation over ground connections.

B. Identify all grounding conductors by system and room number of termination at building grounding electrode point.

C. Grounding Conductors: Route along shortest and straightest paths possible, unless otherwise indicated or required by Code. Avoid obstructing access or placing conductors where they may be subjected to strain, impact, or damage.

D. Common Ground Bonding with Lightning Protection System: Comply with NFPA 780 and UL 96 when interconnecting with lightning protection system. Bond electrical power system ground directly to lightning protection system grounding conductor at closest point to electrical service grounding electrode. Use bonding conductor sized same as system grounding electrode conductor, and install in conduit.

E. Ground Rods: Install ground rods with the top 1 ft minimum below finished grade.
   1. Interconnect ground rods with grounding electrode conductor below grade and as otherwise indicated. Make connections without exposing steel or damaging coating, if any.

F. Bonding Straps and Jumpers: Install in locations accessible for inspection and maintenance, except where routed through short lengths of conduit.
   1. Bonding to Structure: Bond straps directly to basic structure, taking care not to penetrate any adjacent parts.
   2. Bonding to Equipment Mounted on Vibration Isolation Hangers and Supports: Install so vibration is not transmitted to rigidly mounted equipment.
   3. Use exothermic-welded connectors for outdoor locations, but if a disconnect-type connection is required, use a bolted clamp.

G. Grounding and Bonding for Piping:
   1. Metal Water Service Pipe: Install insulated copper grounding conductors, in conduit, from building's main service equipment, or grounding bus, to main metal water service entrances to building. Connect grounding conductors to main metal water service pipes, using a bolted clamp connector or by bolting a lug-type connector to a pipe flange, using one of the lug bolts of the flange. Where a dielectric main water fitting is installed, connect grounding conductor on street side of fitting. Bond metal grounding conductor conduit or sleeve to conductor at each end. Water pipe, by itself, is not an adequate grounding electrode and must be supplemented by another electrode system. Bond system together.
   2. Water Meter Piping: Use braided-type bonding jumpers to electrically bypass water meters. Connect to pipe with a bolted connector.

H. Bond laboratory gas piping at point of origin and at each floor of distribution to service entrance grounding bus bar.

I. Make grounding connections on surface that has been cleaned of paint, dirt, oil, etc., so that connections are bare metal to bare metal contact.

J. Make grounding connections tight with UL listed grounding devices, fittings, bushings, etc.

K. Equipment Grounding Conductor: Terminate in panelboard at green wire ground bus.

L. Multiple Conductors on Single Lug: Not permitted. Terminate each grounding conductor on its own terminal lug.

M. Flexible Metallic Conduit, Non-Metallic Rigid Conduit, or Liquid Tight Flexible Conduit: Install green wire grounding conductor with phase conductors in conduit.

## 3.5 FIELD QUALITY CONTROL

A. After installing grounding system but before permanent electrical circuits have been energized, test for compliance with requirements.
   1. Test completed grounding system at each location where a maximum ground-resistance level is specified, at service disconnect enclosure grounding terminal at ground test wells. Make tests at ground rods before any conductors are connected.

B. Test grounding systems per requirements in Section 26 0812 – Power Distribution Acceptance Tests and 26 0813 – Power Distribution Acceptance Test Tables.

C. Interpret test results in writing and submit to Engineer.

D. Inspect completed system by commissioning authority, prior to backfilling.

**END OF SECTION**

# SECTION 26 0529 HANGERS AND SUPPORTS FOR ELECTRICAL SYSTEMS

## PART 1 - GENERAL

### 1.1 RELATED WORK

A. Section 26 0533 – Raceway and Boxes for Electrical Systems

B. Section 26 2816 – Enclosed Switches and Circuit Breakers

C. Section 26 2913 – Enclosed Controllers

### 1.2 REFERENCE

A. Work under this section is subject to requirements of Contract Documents including General Conditions, Supplementary Conditions and sections under Division 01 General Requirements.

### 1.3 DESCRIPTION

A. Section includes the following:
   1. Manufactured hangers and supports for individual raceways and cables, slotted channel and angle systems for multiple conduit runs, and most electrical equipment that is not floor mounted.
   2. Construction requirements for concrete housekeeping pads for floor-mounted electrical equipment.

### 1.4 REFERENCE STANDARDS

A. AWS D1.1/D1.1M – Structural Welding Code-Steel.

B. ASTM A 36/A 36M – Carbon Structural Steel.

C. ASTM A 325 – Structural Bolts, Steel, Heat Treated, 120/105 ksi Minimum Tensile Strength.

D. ASTM A 780 – Practice for Repair of Damaged and Uncoated Areas of Hot-Dip Galvanized Coatings.

E. MSS SP-58 – Pipe Hangers and Supports - Materials, Design and Manufacture.

F. MSS SP-69 – Pipe Hangers and Supports - Selection and Application.

G. MFMA-4 – Metal Framing Standards Publication.

H. NECA 1 – Standard Practices for Good Workmanship in Electrical Construction.

I. NECA 101 – Standard for Installing Steel Conduits (Rigid, IMC, EMT).

J. NFPA 70 – National Electrical Code.

K. SSPC-PA 1 – Paint Application Specification No. 1: Shop, Field, and Maintenance Painting of Steel.

### 1.5 SUBMITTALS

A. Product Data: For the following:
   1. Steel slotted support systems.

2. Raceway and cable supports.
3. Support for conductors in vertical raceway.
4. Structural steel for fabricated supports and restraints.
5. Mounting, anchoring, and attachment components:
    a. Powder-actuated fasteners.
    b. Mechanical-expansion anchors.
    c. Concrete inserts.
    d. Clamps for attachment to structural steel.
    e. Through bolts.
    f. Toggle bolts.
    g. Hanger rods.

B. Shop Drawings: Include concrete anchors application, size, and placement. Include concrete inserts application, size, loading, and placement. Show fabrications and installation details and include calculations for the following:
    1. Trapeze hangers. Include product data for components.
    2. Steel slotted channel systems. Include product data for components.
    3. Fabricated metal equipment support assemblies.

C. Welding certificates.

D. Schedule of hangers and support devices with support spacing.

## 1.6 QUALITY ASSURANCE

A. Welding: Qualify procedures and personnel according to AWS D1.1/D1.1M, “Structural Welding Code – Steel.”

B. Comply with NFPA 70.

# PART 2 - PRODUCTS

## 2.1 SUPPORT, ANCHORAGE, AND ATTACHMENT COMPONENTS

A. Rated Strength: Adequate in tension, shear, and pullout force to resist maximum loads calculated or imposed for this Project, with a minimum structural safety factor of 5 times the applied force.

B. Steel Slotted Support Systems: Comply with MFMA-4, factory-fabricated components for field assembly.
    1. Finishes
        a. Metallic Coatings:
            1) Factory standard primed, galvanized of electroplated finish and applied according to MFMA-4, for indoor applications.
            2) Hot-dip galvanized after fabrication and applied according to MFMA-4, for outdoor applications.
        b. Painted Coatings: Manufacturer’s standard painted coating applied according to MFMA-4.
    2. Channel Dimensions: Selected for applicable load criteria.
    3. Manufacturers:
        a. Allied Support Systems; Power-Strut Unit.

b. Cooper B-Line, Inc.; A division of Cooper Industries.
c. ERICO International Corporation.
d. GS Metals Corporation.
e. Thomas & Betts Corporation.
f. Unistrut; Tyco International, Ltd.
g. Wesanco, Inc.
h. National Pipe Hanger Corporation.
i. Michigan Hanger Co., Inc.; O-Strut Division.
j. Approved equal.

C. Raceway and Cable Supports: As described in NECA 1 and NECA 101.

D. Raceway and Cable Support Devices: Steel hangers, clamps, and associated fittings, designed for types and sizes of raceway or cable to be supported.

E. Support for Conductors in Vertical Raceway: Factory-fabricated assembly consisting of threaded body and insulating wedging plug or plugs for non-armored electrical conductors or cables in riser conduits. Plugs shall have number, size, and shape of conductor gripping pieces as required to suite individual conductors or cables supported. Body shall be malleable iron.

F. Structural Steel for Fabricated Supports and Restraints: ASTM A 36/A 36M, steel plates, shapes, and bars; black and galvanized.

G. Mounting, Anchoring, and Attachment Components: Items for fastening electrical items or their supports to building surfaces include the following:
1. Powder-Actuated Fasteners: Threaded-steel stud, for use in hardened portland cement concrete, steel, or wood, with tension, shear, and pullout capacities appropriate for supported loads and building materials where used.
a. Manufacturers:
1) Hilti Inc.
2) ITW Ramset/Red Head; A division of Illinois Tool Works, Inc.
3) MKT Fastening, LLC.
4) Simpson Strong-Tie Co., Inc.; Masterset Fastening Systems Unit
5) Approved equal
2. Mechanical-Expansion Anchors: Insert-wedge-type, zinc-coated steel, for use in hardened portland cement concrete with tension, shear, and pullout capacities appropriate for supported loads and building materials in which used.
a. Manufacturers:
1) Cooper B-Line, Inc.; A division of Cooper Industries
2) Empire Tool and Manufacturing Co., Inc.
3) Hilti Inc.
4) ITW Ramset/Red Head; A division of Illinois Tool Works, Inc.
5) MKT Fastening, LLC.
6) Approved equal
3. Concrete Inserts: Steel or malleable-iron, slotted support system units similar to MSS Type 18; complying with MFMA-4 or MSS SP-58.
4. Clamps for Attachment to Steel Structural Elements: MSS SP-58, type suitable for attached structural element.

5. Through Bolts: Structural type, hex head, and high strength. Comply with ASTM A 325.
6. Toggle Bolts: All-steel springhead type.
7. Hanger Rods:
   a. MSS SP-58; threaded steel, with adjusting and lock nuts; electroplated zinc finish.
   b. MSS SP-58; nonmetallic, with adjusting and lock nuts.

## 2.2 FABRICATED METAL FRAMING EQUIPMENT SUPPORT ASSEMBLIES

A. Description: Welded or bolted, structural steel shapes, shop or field fabricated to fit dimensions of supported equipment.

B. Materials: Comply with requirements in Division 05 Section “Metal Fabrications” for steel shapes and plates; not be lighter than 12 gauge.

C. Finish: Electro-galvanized.

D. Manufacturers: Same as in paragraph 2.1.B.3 above.

## 2.3 CONTINUOUS INSERT CHANNELS

A. Length and support capabilities to be suitable for application.

B. Brackets, inserts and accessories suitable for channel insert selected.

C. Manufacturers:
   1. Unistrut; Tyco International, Ltd.
   2. Cooper B-Line, Inc.; A division of Cooper Industries
   3. Michigan Hanger Co., O-Strut Division
   4. Anvil International, Inc.
   5. Approved equal

# PART 3 - EXECUTION

## 3.1 APPLICATION

A. Comply with NECA 1 and NECA 101 for application of hangers and supports for electrical equipment and systems except if requirements in this Section are stricter.

B. Maximum Support Spacing and Minimum Hanger Rod Size for Raceway: Space supports for EMT, IMC, and RMC as required by NFPA 70.
   1. Size steel hanger rods for individual hangers and trapeze supports as indicated in the following schedule. Total weight of equipment shall not exceed limits indicated.

| Maximum Loads (lbs) | Rod Diameter (”) | Maximum Pipe Size With Single Rod |
|---|---|---|
| 730 | 3/8 | 2” |
| 1130 | 1/2 | 3” |
| 1818 | 5/8 | 5” |

C. Multiple Raceways or Cables: Install trapeze-type supports fabricated with steel slotted support system, sized so capacity can be increased by at least 25% in future without exceeding specified design load limits.
   1. Secure raceways and cables to these supports with single-bolt conduit clamps using spring friction action for retention in support channel.

D. Spring-steel clamps designed for supporting single conduits without bolts may be used for 1-1/2" and smaller raceways serving branch circuits and communication systems above suspended ceilings and for fastening raceways to trapeze supports.

## 3.2 SUPPORT INSTALLATION

A. Comply with NECA 1 and NECA 101 for installation requirements, except as specified in paragraphs below.

B. Raceway Support Methods: In addition to methods described in NECA 1, raceways may be supported by openings through structure members, as permitted in NFPA 70.

C. Strength of Support Assemblies: Where not indicated, select sizes of components so strength will be adequate to carry present and future static loads within specified loading limits. Minimum static design load used for strength determination shall be weight of supported components plus 200 lb.

D. Mounting and Anchorage of Surface-Mounted Equipment and Components: Anchor and fasten electrical items and their supports to building structural elements by the following methods unless otherwise indicated by code:
   1. To Wood: Fasten with lag screws or through bolts.
   2. To New Concrete: Bolt to concrete inserts.
   3. To Masonry: Approved toggle-type bolts on hollow masonry units and expansion anchor fasteners on solid masonry units.
   4. To Existing Concrete: Expansion anchor fasteners.
   5. Instead of expansion anchors, powder-actuated driven threaded studs provided with lock washers and nuts may be used in existing standard-weight concrete 4" thick or greater. Do not use for anchorage to lightweight-aggregate concrete or for slabs less than 4" thick.
   6. To Steel: Spring-tension clamps or beam clamps.
   7. To Light Steel: Sheet metal screws.
   8. Items Mounted on Hollow Walls and Nonstructural Building Surfaces: Mount cabinets, panelboards, disconnect switches, control enclosures, pull and junction boxes, transformers, and other devices on slotted-channel racks attached to substrate.

E. Drill holes for expansion anchors in concrete at locations and to depths that avoid reinforcing bars.

F. Do not support raceway by other raceway.

G. Do not support equipment or raceway from metal roof decking or floor decking.

H. Do not impose weight of electrical equipment, raceways, or lighting fixtures on support provided for other trades or systems.

I. Do not support loads from bottom chord member of trusses or open web chord.

J. Suspend hangers by means of hanger rods. Perforated band iron and flat wire (strap iron) are not allowed.

K. Use conduit-mounting pedestals for piping on roof. Install bottom of pedestal flat on roof deck and insulate exterior of pedestal, flush and counter flush. Coordinate roof mounting methods with roof system installer to maintain roof warranty provided by roof system installer.

L. Minimize use of concrete anchors and inserts after concrete pour.

M. Punching, drilling, welding of building structural steel or welding attachment to building structural steel is not allowed, unless approved by structural engineer.

## 3.3 INSTALLATION OF FABRICATED METAL SUPPORTS

A. Comply with installation requirements in Division 05 Section “Metal Fabrications” for site-fabricated metal supports.

B. Cut, fit, and place miscellaneous metal supports accurately in location, alignment, and elevation to support and anchor electrical materials and equipment.

C. Field Welding: Comply with AWS D1.1/D1.1M.

## 3.4 CONCRETE HOUSEKEEPING PADS

A. Construct concrete housekeeping pads for all floor-mounted electrical equipment.

B. Dimensions: 3.5” high and not less than 4” larger in both directions than supported equipment, so anchors will be a minimum of 10 bolt diameters from edge of the base.

C. Housekeeping pads (equipment pads) for oil-filled transformers and generators: See structural drawings, details and specifications for equipment pad dimensions and requirements.

D. Use 3000 psi, 28-day compressive-strength concrete. Concrete materials, reinforcement, and placement requirements are specified in Division 03 Section “Cast-in-Place Concrete.”

E. Anchor equipment to concrete housekeeping pad.
   1. Place and secure anchorage devices. Use supported equipment manufacturer’s setting drawings, templates, diagrams, instructions, and directions furnished with items to be embedded.
   2. Install anchor bolts to elevations required for proper attachment to supported equipment.
   3. Install anchor bolts according to anchor-bolt manufacturer’s written instructions.

F. Coordinate with Architect installation of housekeeping pads on roof.

## 3.5 PAINTING

A. Touchup: Clean field welds and abraded areas of shop paint. Paint exposed areas immediately after erecting hangers and supports. Use same materials as used for shop painting. Comply with SSPC-PA 1 requirements for touching up field-painted surfaces.
   1. Apply paint by brush or spray to provide minimum dry film thickness of 2.0 mils.

**END OF SECTION**

# SECTION 26 0533 RACEWAY AND BOXES FOR ELECTRICAL SYSTEMS

## PART 1 - GENERAL

### 1.1 RELATED WORK

A. Section 26 0519 – Low-Voltage Electrical Power Conductors and Cables

B. Section 26 0526 – Grounding and Bonding for Electrical Systems

C. Section 26 0529 – Hangers and Supports for Electrical Systems

D. Section 26 0553 – Electrical Systems Identification

E. Section 26 0593 – Electrical Systems Firestopping

F. Section 26 2726 – Wiring Devices

### 1.2 REFERENCE

A. Work under this section is subject to requirements of Contract Documents including General Conditions, Supplementary Conditions, and sections under Division 01 General Requirements.

### 1.3 DESCRIPTION

A. Section includes raceways, fittings, wireways, wall ducts, indoor service poles, outlet boxes, pull and junction boxes, floor boxes, tap boxes and raceway seals.

### 1.4 REFERENCE STANDARDS

A. ANSI/NECA 1 – Standard Practices for Good Workmanship in Electrical Contracting

B. ANSI C80-1 – Rigid Steel Conduit-Zinc Coated (GRS)

C. ANSI C80-3 – Electrical Metallic Tubing-Zinc Coated (EMT)

D. ANSI C80-6 – Intermediate Metal Conduit-Zinc Coated (IMC)

E. ASTM A 53/A 53M – Specification for Pipe, Steel, Black and Hot-Dipped, Zinc-Coated Welded and Seamless

F. ETL PVC-001 – Intertek ETL SEMKO High Temperature $H^2O$ PVC Coating Adhesion Test Procedure for 200hrs.

G. NEMA 250 – Enclosures for Electrical Equipment (1000 V Maximum)

H. NEMA FB 1 – Fittings, Cast Metal Boxes, and Conduit Bodies for Conduit, Electrical Metallic Tubing and Cable

I. NEMA OS 1 – Sheet-Steel Outlet Boxes, Device Boxes, Covers, and Box Supports

J. NEMA TC 2 – Electrical Polyvinyl Chloride (PVC) Conduit

K. NEMA TC 3 – PVC Fittings for Use with Rigid PVC Conduit and Tubing

L. NFPA 70 – National Electrical Code

M. UL 1 – Flexible Metal Conduit

N. UL 6 – Electrical Rigid Metallic Conduit-Steel

O. UL 360 – Liquid-Tight Flexible Steel Conduit

P. UL 514A – Metallic Outlet Boxes

Q. UL 514B – Conduit, Tubing, and Cable Fittings

R. UL 651 – Schedule 40 and 80 Rigid PVC Conduit and Fittings

S. UL 797 – Electrical Metallic Tubing-Steel

T. UL 870 – Wireways, Auxiliary Gutters, and Associated Fittings

U. UL 1242 – Electrical Intermediate Metal Conduit-Steel

V. UL 1660 – Liquid-Tight Flexible Nonmetallic Conduit

## 1.5 SUBMITTALS

A. Product Data:
   1. Raceways
   2. Fittings
   3. Wireways
   4. Outlet boxes
   5. Pull and junction boxes
   6. Tap boxes
   7. Raceway seals

B. Manufacturer's Installation Instructions:
   1. Indicate application conditions and limitations of use stipulated by product testing agency. Include instructions for storage, handling, protection, examination, preparation and installation of product.

C. Closeout Submittals:
   1. Project Record Documents:
      a. Record actual routing of raceways 2" and larger.
      b. Record actual location and mounting heights of wireways, indoor service poles, floor boxes, tap boxes, outlet, pull and junction boxes.

## 1.6 QUALITY ASSURANCE

A. Regulatory Requirements:
   1. Comply with NFPA 70.
   2. Furnish products listed and classified by Underwriters Laboratories, Inc., as suitable for purpose specified and indicated.

## 1.7 DELIVERY, STORAGE, AND HANDLING

A. Store in clean, dry space. Maintain factory wrapping or provide additional canvas or plastic cover to protect from dirt, water, construction debris, and traffic.

B. Protect PVC conduit from sunlight.

C. Comply with manufacturer's written instructions.

### 1.8 WARRANTY

A. Refer to Division 01 and Section 26 0000 – General Electrical Requirements for general warranty requirements.

## PART 2 - PRODUCTS

### 2.1 RIGID METAL CONDUIT (RMC)

A. Rigid Steel Conduit (RSC): ANSI C80.1, UL 6; heavy wall galvanized steel**.**

B. Intermediate Metal Conduit (IMC): ANSI C80.6, UL 1242; thinner wall, galvanized steel**.**

C. Fittings (couplings, conduit bodies, connectors and bushings): NEMA FB 1, UL 514B; aluminum alloy; threaded; connectors with double locknuts and steel insulating bushings, thermoplastic insulating bushings; conduit bodies cover: stamped steel, with stainless steel screws and neoprene gaskets**.**

D. Fittings Manufacturers: Cooper Crouse-Hinds; Carlon Electric Products; O-Z/Gedney; Appleton; Hubbell; Robroy Industries – Perma-Cote.

### 2.2 ELECTRICAL METALLIC TUBING (EMT)

A. ANSI C80.3, UL 797; galvanized steel tubing

B. Fittings (couplings, conduit bodies, and connectors): NEMA FB I, UL 514B; steel, watertight gland compression type connectors with double locknuts and insulated throat; conduit bodies cover: stamped steel, with stainless steel screws and neoprene gaskets. Indentor, drive-on, die-cast or pressure cast fittings not permitted.

C. Fittings Manufacturers: Same as manufacturers listed in 2.1.D.

### 2.3 FLEXIBLE METAL CONDUIT (FMC)

A. UL 1; interlocked steel

B. Fittings: NEMA FB I, UL 514B; steel

### 2.4 LIQUIDTIGHT FLEXIBLE METAL CONDUIT (LFMC)

A. UL 360; interlocked steel, with PVC jacket

B. Fittings: NEMA FB 1, UL 514B; steel

### 2.5 RIGID NONMETALLIC CONDUIT (RNC)

A. NEMA TC 2, UL 651; Schedule 40 PVC

B. Fittings: NEMA TC 3, UL 651

C. NEMA TC 2, UL 651; Schedule 40 and 80 PVC

D. Fittings: NEMA TC 3, UL 651

## 2.6 METAL WIREWAYS

A. NEMA 250, UL 870; galvanized sheet metal troughs with hinged or removable cover, Type 1 for indoor and 3R for outdoor, unless otherwise indicated.

B. Size: cross section and length as indicated on drawings.

C. Fittings and Accessories: Couplings, offsets, elbows, expansion joints, adapters, hold-down straps, end caps, and other fittings to match and mated with wireways as required for complete system.

D. Wireways Covers: Screw-cover type for indoor, flanged-and-gasketed type for outdoor.

E. Knockouts: none.

F. Finish: Manufacturer's standard enamel finish

G. Manufacturers: Same as listed in Section 2.9F.

## 2.7 OUTLET BOXES

A. Sheet Metal Outlet Boxes: NEMA OS 1, UL 514A; galvanized steel with stamped knockouts.
   1. Luminaire and Equipment Supporting Boxes: Rated for weight of equipment supported; 1/2" male fixture studs, where required
   2. Concrete Ceiling Boxes: Concrete type

B. Cast-Metal Outlet Boxes: NEMA FB 1, cast aluminum or cast iron (galvanized), Type FD, with gasketed cover and threaded hubs

C. Gangable type boxes are not allowed

D. Manufacturers: O-Z/Gedney; Raco; Cooper Crouse-Hinds; Approved equal

## 2.8 PULL AND JUNCTION BOXES

A. Small Sheet Metal Pull and Junction Boxes: NEMA OS 1; galvanized steel

B. Cast-Metal, Pull, and Junction Boxes: NEMA FB 1; cast aluminum or galvanized, cast iron with ground flange, gasketed cover and stainless steel cover screws

C. Minimum size: 4" square by 2-1/8" deep for use with 1" conduit and smaller; 4-11/16" square by 2-1/8" for use with 1-1/4" conduit and larger

D. Sheet Metal Boxes Larger Than 12" in any direction: Hinged cover or a chain installed between box and cover

E. Field-fabricated boxes not allowed without prior approval of local authority having jurisdiction.

F. Manufacturers: O-Z/Gedney; Raco; Cooper Crouse-Hinds; Hubbell-Weigmann; Hoffman; J&A Sheet Metal Inc. Austin Electrical Enclosures; Approved equal

## 2.9 EXPANSION FITTINGS

A. Malleable iron, hot dip galvanized allowing 4" allowing 2" raceway movement.

B. Manufacturers: OZ/Gedney AX Series; or equivalent by manufacturer listed in 2.1.D.

## 2.10 RACEWAY PENETRATION SEALS

A. Thruwall and Floor Seals.

B. Manufacturers: New construction – OZ/Gedney FSK Series; existing construction – OZ/Gedney CSM Series; or equivalent by manufacturer listed in 2.1.D.

## 2.11 RACEWAY SEALING FITTINGS

A. For one through four conductors: Manufacturers: OZ/Gedney CSB Series; Approved equal

B. For greater than four conductors: Manufacturers: OZ/Gedney EYA Series with sealing compound; Approved equal

C. Low-temperature or hazardous locations: Manufacturers: OZ/Gedney EYA Series with sealing compound; Approved equal

## 2.12 CABLE SUPPORTS

A. Manufacturers: OZ/Gedney Type S; or equivalent by manufacturer listed in 2.1.D.

## 2.13 SLEEVES FOR RACEWAYS

A. Steel Pipe Sleeves: ASTM A 53/A 53M, Type E, Grade B, Schedule 40, galvanized steel, plain ends, with integral water stop.

B. Integral Water Stop: Manufacturer: Thunderline Corporation; Approved equal
   1. High density polyethylene (HDPE). Type Century-Line engineered sleeve with end caps.
   2. Steel. Type WS engineered sleeve.

## 2.14 SLEEVE SEALS

A. Description: Modular sealing device, designed for field assembly, to fill annular space between sleeve and cable.
   1. Sealing Elements: EPDM interlocking links shaped to fit surface of cable or conduit. Include type and number required for material and size of raceway or cable.
   2. Pressure Plates: Carbon steel. Include two for each sealing element.
   3. Connecting Bolts and Nuts: Stainless steel of length required to secure pressure plates to sealing elements. Include one for each sealing element.

# PART 3 - EXECUTION

## 3.1 COORDINATION

A. Coordinate with Architect/Engineer size and location of required built-in openings in building structure, including those sleeved, formed or core drilled.

B. Coordinate with Architect/Engineer cutting, removing, or piercing general or mechanical insulation, fire-rated walls, ceilings or steelwork.

C. Verify with Architect/Engineer all surface raceway installations except in mechanical, electrical, and communications rooms.

D. Coordinate routing of any through-wall or through-roof conduits.

E. Coordinate sleeve selection and application with selection and application of firestopping specified in Section 26 0593 – Electrical Systems Firestopping.

F. Verify that exterior wall or wet location boxes are gasketed type cast boxes with matching cover.

G. Verify with manufacturer that “touch-up” paint kit are available for use.

## 3.2 EXAMINATION

A. Examine surfaces to receive raceways and boxes for compliance with installation tolerances and other conditions affecting performance of raceway’s installation. Do not proceed with installation until unsatisfactory conditions have been corrected.

## 3.3 INSTALLATION

A. Raceways:
   1. Comply with ANSI/NECA 1 and NFPA 70 for installation requirements applicable to products specified in Part 2 except where requirements on drawings or in this Section are stricter.
   2. Arrange raceways to maintain headroom and present neat appearance.
   3. Raceway routing is shown in approximate locations, unless dimensioned. Route to complete raceway installation before starting conductor installation.
   4. Keep raceways at least 12”away from parallel runs of fuels, steam, hot-water pipes or ductwork. Install horizontal raceway runs above water and steam piping. Install raceways level and square and at proper elevations: 6’-6” minimum headroom, except in exit pathways 7’-0” minimum headroom. Do not block access to junction boxes, mechanical equipment or prevent removal of ceiling panels, etc.
   5. Run raceways concealed in construction to avoid adverse conditions such as heat and moisture, to permit drainage, and to avoid materials and equipment of other trades, except where noted otherwise.
   6. Avoid exposed raceway runs. Run raceways exposed where impractical or impossible to conceal or where specific approval is obtained. Run exposed raceways grouped and parallel or perpendicular to construction. Do not route exposed raceways over boilers or other high-temperature machinery or in contact with such equipment. Offset exposed raceways at boxes.
   7. Route raceways installed above accessible ceilings parallel or perpendicular to construction.
   8. Install raceway in structural or topping floor slabs, where noted on plans, as follows:
      a. Center raceways in structural slabs clear of reinforcing steel, except where crossing same, and spaced on centers equal or exceeding 3 times the raceway diameter. Secure raceways to reinforcing rods to prevent sagging or shifting during concrete placement. Space raceways laterally to prevent voids in concrete.
      b. Outside diameter of raceway shall not exceed 1/3 the structural slab thickness.
      c. Obtain approval from Engineer for each run of raceway 1” or larger.
      d. Do not run raceways through cast-in-place support elements without approval from the structural engineer.
      e. Do not install raceways in topping slabs of 3” or less.
      f. Locate raceways to avoid conflict with equipment, door bucks, partitions and other equipment bolted to floor.
      g. Use concrete tight set screw conduit connectors.
      h. Arrange stub-ups so curved portions of bends are not visible above finished slab. Install with an adjustable top or coupling threaded inside for plugs set flush with finished floor. Extend conductors to equipment with rigid steel conduit; use flexible metal conduit 6” above the floor. Install threaded plugs flush with floor for future equipment connections.

i. Change from nonmetallic raceway to RMC or IMC before rising above floor.

9. Cut raceways square using saw or pipecutter.
10. Use hydraulic one-shot raceway bender or factory elbows for bends in raceway larger than 1", unless sweep elbows required. Bend raceways according to manufacturer's recommendations. Do not use torches or open flame to aid in bend of PVC conduit.
11. Use raceway fittings compatible with raceways and suitable for use and environment.
12. Provide bushings on all raceways.
13. Raceways minimum sizes:
    a. Minimum raceway size 3/4", except as noted on drawings.
    b. Minimum size for flexible metal conduit is 1/2" except 3/8" for luminaires.
    c. Minimum size for liquidtight flexible metal conduit is 1/2".
14. Install empty raceways with 200 lb nylon pull cord; leave at least 12" of slack at each end of pull wire. Cap raceways at both ends.
15. Feed devices on same wall vertically from above or junction box in suspended ceiling.
    a. Do not install horizontal bends in conduit around corners.
16. Raceways Supports:
    a. Independently support or attach raceway system to structural parts of construction. Suspended ceiling systems shall not be considered as structural parts of construction for raceway support. Do not attach raceways to piping system.
    b. Raceway supports for horizontal or vertical single runs:
        1) Hot dipped galvanized heavy-duty sheet steel straps, mineralac clamps or steel slotted support channel system with appropriate components.
    c. Raceway supports for horizontal and vertical multiple runs:
        1) Trapeze-type supports fabricated with steel slotted channel systems with appropriate components.
        2) Support horizontal runs with appropriately sized rods.
        3) Anchor vertical runs to structure.
    d. Vertical raceway runs 1-1/4" and larger passing through floors: Support at each floor with pipe riser clamps.
    e. Do not support raceways with wire, perforated pipe straps or plastic tie-wrap. Remove wires used for temporary support.
    f. Secure raceways in metal stud walls to prevent rattling.
    g. Arrange raceway supports to prevent misalignment during wiring installation.
    h. Do not fasten raceways to corrugated metal roof deck.
    i. For fasteners and supports, including steel slotted support systems, support devices, support spacing, support of conductors in vertical raceways, and hanger rod size, refer to Section 26 0529 – Hangers and Supports for Electrical Systems and NFPA 70.
17. Identify raceways per requirements in Section 26 0553 – Electrical Systems Identification.
18. Ground raceways per requirements in Section 26 0526 – Grounding and Bonding for Electrical Systems.
19. Flexible Conduit Connections: Use maximum of 72" of flexible conduit for recessed and semi-recessed lighting fixtures, equipment subject to vibration, noise transmission, or movement; and for transformers and motors.
    a. Use LFMC in damp or wet locations subject to severe physical damage.
    b. Do not use LFMC in plenum spaces or within air handling equipment.
    c. Use FMC in dry locations not subject to severe physical damage.

20. Install stainless steel raceway clamps, mounting hardware, supports, hangers, etc., when located in wet areas.
21. Power and Communications Raceways: Minimum 12” separation when run parallel, cross perpendicular.

B. Wireways:
1. Install in accordance with manufacturer’s instructions.
2. Use screws, clips and straps to fasten raceway channel to surfaces.
3. Mount plumb and level.
4. Use suitable insulating bushings and inserts at connections to outlets and corner fittings.
5. Supports: Per manufacturer’s recommendations.
6. Close ends of raceway channel and unused conduit openings.

C. Boxes:
1. Install boxes to accommodate device indicated by symbol, in conformance with code requirements, number and size of conductors and splices and consistent with type of construction.
2. Install the appropriate cover on surface-mounted boxes:
   a. Raised device covers on 4 square and handy boxes.
   b. Device covers that are square drawn or square cut on boxes in block.
   c. Tile covers on boxes in tile.
   d. Round drawn device covers on boxes in lath and plaster walls or dry wall only.
   e. Set front edge of device boxes flush with finished wall surfaces except on walls of non-combustible materials where boxes may have maximum set back of 1/4”. Secure flush-mounted box to interior wall and partition studs. Accurately position to allow for surface finish thickness.
3. Set outlet boxes parallel to construction and independently attached to same.
4. Do not install back-to-back and through-the-wall boxes. Install with minimum 6” horizontal separation between closest edges of the boxes. Install with minimum 24” separation in acoustic-rated walls and fire-rated walls.
5. Install multi-ganged boxes where 2 or more devices are in same location, unless otherwise noted.
6. Box Support:
   a. Mount boxes straight.
   b. Install horizontal bracing at top or bottom of box for 3 or more gang device boxes in stud walls.
   c. Install stud support one side, with short piece of stud, for up to 2 gang device boxes.
   d. Do not support boxes with tie-wire.
   e. For one and two gang box support, manufactured bracket supports shall be accepted alternate.
   f. Support boxes independently of raceways.
   g. Install adjustable steel channel fasteners for hung ceiling outlet box.
   h. Install stamped steel bridges to fasten flush-mounted outlet box between studs.
   i. Do not install boxes to ceiling support wires or piping systems.
7. Install partitions in multi-ganged boxes where different types of devices are installed, or devices installed operate at different voltages.
8. Mount boxes in block walls at block joint nearest to indicated height.

9. Recessed Boxes in Masonry Walls: Saw-cut opening for box in center of cell of masonry block, and install box flush with surface of wall.
10. When boxes are installed in fire-resistive walls and partitions, limit penetrations to 16 sq in per penetration and not to exceed a total of 100 sq in per 100 sq ft of wall area. Use FireBlok fire suppression gaskets or fire stop putty pads acceptable to the fire marshal.
11. Pull and junction boxes: Install as shown, or as necessary to facilitate pulling of wire and to limit number of bends within code requirements. Install above accessible ceilings and in unfinished areas.
12. Install boxes to be permanently accessible.
13. Do not intermix conductors from more than one system in same junction box or pull box, unless shown or specifically authorized otherwise.
14. Adjust box location up to 10' prior to rough-in to accommodate intended purpose.
15. Orient boxes to accommodate wiring devices oriented as specified in Section 26 2726 – Wiring Devices.
16. Inaccessible Ceiling Areas: Install outlet and junction boxes no more than 6" from ceiling access panel or from removable recessed luminaire.
17. The drawings do not necessarily show every outlet, pull or junction box required. Add all required boxes as necessary.

D. Expansion Fittings:
1. Install raceway expansion and deflection fittings in all raceway runs embedded in or penetrating concrete where movement perpendicular to axis of the raceway may be encountered.
2. Install raceway expansion fittings complete with bonding jumpers in raceway runs that cross expansion joints in structure and raceway runs mechanically attached to 2 separate structures.
3. Install fitting(s) that provide expansion and contraction for at least 0.0004" per ft of length of straight run per °F of temperature change.
4. Install each expansion-joint fitting with position, mounting, and piston setting selected according to manufacturer's written instructions for conditions at specific location at time of installation.

E. Raceway Penetration Seals:
1. Seal space outside of sleeves with grout for penetrations of concrete and masonry and with approved joint compound for gypsum board assemblies.
2. Interior Penetrations of Non-Fire-Rated Walls and Floors: Seal annular space between sleeve and raceway, using joint sealant appropriate for size, depth, and location of joint.
3. Fire-Rated-Assembly Penetrations: Maintain indicated fire rating of walls, partitions, ceilings, and floors at raceway penetrations. Install sleeves and seal with firestop materials. Comply with Section 26 0593 – Electrical Systems Firestopping.
4. Roof-Penetration Sleeves: Seal penetration of individual raceways with flexible, boot-type flashing units applied in coordination with roofing work.
5. Aboveground, Exterior-Wall Penetrations: Seal penetrations using sleeves and mechanical sleeve seals. Select sleeve size to allow for 1" annual clear space between pipe and sleeve for installing mechanical sleeve seals.
6. Underground, Exterior-Wall Penetrations: Install cast-iron "wall pipes" for sleeves. Size sleeves to allow for 1" annual clear space between raceway and sleeve for installing mechanical sleeve seals.
7. Sleeve-Seal Installation: Use type and number of sealing elements recommended by manufacturer for raceway material and size. Position raceway in center of sleeve. Assemble mechanical sleeve seals and install in annular space between raceway and sleeve. Tighten bolts against pressure plates that cause sealing elements to expand and make watertight seal.

8. Provide chrome- or nickel-plated escutcheons where raceways pass through walls, floors or ceilings and are exposed in finished areas. Size escutcheons to fit raceways for finished appearance. Finished areas shall not include mechanical/electrical rooms, janitor's closets, storage rooms, etc., unless suspended ceilings are specified.
9. Remove temporary sleeves, if used for form wall openings, prior to installation of permanent materials.

F. Raceway Sealing Fittings:
1. Install listed watertight seals to prevent the passage of moisture and water vapor through raceway, where raceway passes from interior to exterior of the building, where raceway passes between areas of different temperatures such as into or out of cold rooms, freezers and air handling units, where raceway enters room which at any time is subject to low or high temperatures and where raceway enters a room which at any time is subject to internal air pressures above or below normal.
2. Install watertight seals in interior of all raceways passing through building roof, ground floor slab (when the raceway does not extend beyond building footprint), or through outside walls of building above or below grade. Seal on the end inside building, using raceway sealing fittings manufactured for the purpose. Locate fittings at suitable accessible locations. For concealed raceways install each fitting in flush steel box with blank coverplate to match finish of adjacent plates or surfaces.

G. Sleeve Installation for Electrical Penetrations:
1. Coordinate sleeve selection and application with selection and application of firestopping specified in Section 26 0593 – Electrical Systems Firestopping.
2. Concrete Slabs and Walls: Install sleeves for penetrations unless core-drilled holes or formed openings are used. Install sleeves during erection of slabs and walls.
3. Use pipe sleeves unless penetration arrangement requires rectangular sleeved opening.
4. Fire-Rated Assemblies: Install sleeves for penetrations of fire-rated floor and wall assemblies, unless openings compatible with firestop system used are fabricated during construction of floor or wall.
5. Cut sleeves to length for mounting flush with both surfaces of walls.
6. Extend sleeves installed in floors 2" above finished floor level.
7. Size pipe sleeves to provide 1/2" annular clear space between sleeve and raceway, unless sleeve seal is to be installed.

## 3.4 APPLICATION

A. Raceway uses permitted and not permitted per NFPA 70 requirements and as described below.

B. Rigid Metal Conduit (RMC) permitted to be installed as follows:
1. Installations below grade and in or under concrete slabs
2. All locations except corrosive atmospheres
3. Hazardous locations
4. Locations requiring mechanical protection
5. Stub up through slabs

C. Intermediate Metallic Conduit (IMC) permitted to be installed as follows:
1. Installation below grade and in or under concrete slabs
2. All locations, except corrosive atmospheres
3. Hazardous locations

4. Locations requiring mechanical protection

D. Electrical Metallic Tubing (EMT) permitted to be installed as follows:
   1. Interior partitions
   2. Above suspended ceilings
   3. In concrete slabs
   4. Above 6 ft AFF in exposed areas of mechanical equipment rooms
   5. Exposed in areas not subject to damage
   6. Sizes 2” and smaller except as approved

E. Flexible Metal Conduit (FMC) permitted to be installed as follows:
   1. Use flexible metal conduit not over 4 ft in length for final connections for:
      a. Vibrating equipment (including transformers and hydraulic, pneumatic, electric solenoid, or motor-driven equipment) in dry locations.
      b. Final connections to recessed luminaires in lengths not to exceed 6 ft.

F. Liquid Tight Flexible Metal Conduit (LFMC) permitted to be installed as follows:
   1. Use liquid tight flexible conduit, not over 4 ft in length, for final connections to:
      a. Vibrating equipment (including transformers and hydraulic, pneumatic, electric solenoid, or motor-driven equipment) in wet locations.
      b. Instruments and control devices
      c. PVC coated LFMC is not allowed in environmental air plenum spaces or air handling equipment.

G. Rigid Nonmetallic Conduit (RNC) permitted to be installed as follows:
   1. Direct burial, concrete encased
   2. Direct burial, in sand fill on bottom and top
   3. Corrosive atmospheres
   4. Use steel elbow in concrete encased runs

H. One-half inch raceway permitted:
   1. Between controller and its control or pilot device
   2. Between lighting switch and nearest outlet for luminaire
   3. Control wiring where mounted on equipment where conduit must follow contour of equipment
   4. Protective and signal systems where noted
   5. Where shown on plans

## 3.5 RACEWAY WIRING METHODS

A. Underground: Install galvanized rigid steel conduit or thickwall nonmetallic conduit encased in concrete; threaded conduit fittings for steel; primed and solvent glue fittings for PVC.

B. In Slab: Install electrical metallic tubing; concrete tight set screw conduit fittings; install cast metal boxes.

C. Outdoor Locations, Above Grade: Install galvanized rigid steel conduit or intermediate metal conduit; threaded conduit fittings; install cast metal or nonmetallic outlet boxes with threaded hubs.

D. Wet and Damp Indoor Locations: Install galvanized rigid steel conduit or intermediate metal conduit; threaded conduit fittings; install cast metal or nonmetallic outlet, junction, and pull boxes with threaded hubs. Install flush mounting outlet boxes in finished areas.

E. Concealed and Exposed Dry Locations Not Subject to Damage: Install electrical metallic tubing; install sheet metal boxes; install flush mounting outlet boxes in finished areas.

F. Exposed Subject to Damage: Install galvanized rigid steel conduit or intermediate metal conduit; threaded conduit fittings; install cast metal boxes with threaded hubs. Open public spaces such as parking garages and common areas are considered subject to damage.

## 3.6 FIELD QUALITY CONTROL

A. Inspect raceway, boxes, indoor service poles, and wireways for physical damage, proper alignment, supports and seismic restraints, where applicable.

B. Replace any damaged component of the raceway system, or install new raceway system.

C. Inspect components, wiring, connections and grounding.

## 3.7 REPAINTING

A. Repair damage to galvanized finishes with manufacturer-supplied zinc-rich paint kit. Leave remaining paint with Owner.

B. Repair damage to PVC or paint finishes with manufacturer-supplied touch-up coating. Leave remaining coating with Owner.

## 3.8 ADJUSTING

A. Adjust flush-mounted boxes pre-pour and after-pour to be flush with finished materials.

B. Install knockout closures in unused openings in boxes.

C. Align adjacent wall-mounted outlet boxes for switches and similar devices.

D. Adjust outlet boxes to allow luminaires to be positioned as indicated on drawings.

## 3.9 CLEANING

A. Clean interior and exterior of boxes, wireways, and indoor poles to remove dust, debris and other material.

**END OF SECTION**

# SECTION 26 0543 - UNDERGROUND DUCTS AND RACEWAYS FOR ELECTRICAL SYSTEMS

## PART 1 - GENERAL

### 1.1 RELATED WORK

A. Section 26 0526 - Grounding and Bonding for Electrical Systems

B. Section 26 0533 - Raceway and Boxes for Electrical Systems

### 1.2 REFERENCE

A. Work under this section is subject to requirements of Contract Documents including General Conditions, Supplementary Conditions, and sections under Division 01 General Requirements.

### 1.3 DESCRIPTION

A. Section includes conduits, ducts, and duct accessories for direct buried and concrete encased for underground distribution for electrical power and communications.

B. The terms duct and duct bank, as used in this Section, are defined as follows:
   1. Duct: A single underground conduit, encased in concrete or direct buried.
   2. Duct Bank: Two or more ducts run together.

### 1.4 REFERENCE STANDARDS

A. ANSI C2 – National Electrical Safety Code

B. ASTM F512 – Specification for Smooth-Wall Poly (Vinyl Chloride) (PVC) Conduits and Fittings for Underground Installation

C. NEMA TC2 – Electrical Polyvinylchloride (PVC) Conduit

D. NEMA TC3 – PVC Fittings for Use with Rigid PVC Conduit and Tubing

E. NEMA TC6&8 – PVC Plastic Utilities Duct for Underground Installation

F. NEMA TC9 – Fittings for PVC Plastic Utility Duct for Underground Installation

G. NFPA 70 – National Electrical Code

H. UL 651 – Schedule 40 and 80 Rigid PVC Conduit

I. UL 651A – Type EB and A Rigid PVC Conduit and HDPE Conduit

### 1.5 SUBMITTALS

A. Product data for the following:
   1. Duct bank materials, including spacers and miscellaneous components
   2. Ducts and conduits and their accessories, including elbows, end bells, bushings, seals, bends, fittings, plugs, pull tape, and solvent cement
   3. Warning tape

B. Manufacturer’s Installation Instructions:

1. Indicate application conditions and limitations of use stipulated by product testing agency. Include instructions for storage, handling, protection, examination, preparation, and installation of product.

C. Closeout Submittals:
   1. Project Record Documents:
      a. Record actual routing of conduits and duct banks.
   2. Operation and Maintenance Data:
      a. Include manufacturer's recommended operating instructions, maintenance procedures and intervals, and preventive maintenance instructions.
      b. Include spare parts data listing, source, and current prices of replacement parts and supplies.

## 1.6 QUALITY ASSURANCE

A. Regulatory Requirements:
   1. Comply with NFPA 70
   2. Comply with ANSI C2
   3. Furnish products listed and classified by Underwriters Laboratories, Inc., as suitable for purpose specified and indicated.

## 1.7 DELIVERY, STORAGE, AND HANDLING

A. Store in clean, dry space. Maintain factory wrapping or provide additional canvas or plastic cover to protect from dirt, water, construction debris, and traffic.

B. Deliver ducts to project site with end capped. Store nonmetallic ducts with supports to prevent bending, warping, and deforming.

## 1.8 WARRANTY

A. Refer to Division 01 and Section 26 0000 – General Electrical Requirements for general warranty requirements.

B. Manufacturer shall provide standard 1 yr written warranty against defects in materials and workmanship for products specified in this Section. Warranty period shall begin on date of substantial completion.

# PART 2 - PRODUCTS

## 2.1 CONDUITS

A. Size: As indicated on drawings

B. Type: As indicated in Section 26 0533 - Raceway and Boxes for Electrical Systems
   1. PVC raceways are to be concrete encased with 3" minimum cover.
   2. Galvanized ridged steel conduit where penetrating slab and/or equipment pads.

## 2.2 NONMETALLIC DUCT ACCESSORIES

A. Duct Accessories:

1. Duct Spacers: Factory-fabricated rigid PVC interlocking spacers, sized for type and sizes of ducts with which used, and selected to provide minimum duct spacings indicated while supporting ducts during concreting or backfilling. Horizontal and vertical locking separation between ducts as shown on drawings.
2. Plugs: Closure plugs or caps of same material as conduit at ends of unused sections.
3. Pull Tape: Nylon pull tape with measurement markings in uniform lengths in each empty duct.

B. Grounding:
1. Steel grounding bushings.
2. Grounding bushings bonded to equipment grounding conductor at each end.

C. Solvent Cement and Primer: Recommended by conduit manufacturer.

## PART 3 - EXECUTION

### 3.1 COORDINATION

A. Coordinate layout and installation of ducts with final arrangement of other utilities, site grading, and surface features as determined in the field.

B. Coordinate elevations of ducts and duct bank entrances into terminations with final locations and profiles of ducts and duct banks as determined by coordination with other utilities, underground obstructions, and surface features. Revise locations and elevations from those indicated as required to suit field conditions and to ensure that duct runs drain to manholes and handholes, and as approved by Architect.

C. Adjust the depth of electrical utilities to avoid existing utilities with no change to contract price.

D. Duct Bank Coordination Drawings: Show duct profiles and coordination with other utilities and underground structures.
1. Include plans and sections, drawn to scale, and show bends and locations of expansion fittings.
2. Drawings shall be signed and sealed by a qualified professional engineer.

### 3.2 EXISTING UTILITIES

A. The existing utilities shown on contract drawings have been plotted from available records. No guarantee is made as to accuracy of locations indicated, and is shown for the benefit of Contractor.

B. Contact all serving utility companies and have them locate their lines prior to commencing work. Telephone local locating contractor 48 hours prior to commencing work. Coordinate with Owner all existing utility lines prior to commencing work.

C. Protect shown, visible and located utilities from damage. Promptly repair all active shown, visible and located utilities damaged by construction. This repair shall be made solely at the expense of the Contractor.

D. Demolish and completely remove from site existing underground utilities indicated to be removed. Coordinate with utility companies to shut off services if lines are active.

### 3.3 PROJECT CONDITIONS

A. Interruption of Existing Electrical Service: Do not interrupt electrical service to facilities occupied by Owner or others unless permitted under the following conditions and then only after arranging to provide temporary electrical service according to requirements indicated:

1. Notify Construction Manager no fewer than 5 days in advance of proposed interruption of electrical service.
2. Do not proceed with interruption of electrical service without Construction Manager's written permission.

### 3.4 DUCT INSTALLATION

A. Slope: Pitch ducts a minimum slope of 1:300 down toward manholes and handholes and away from buildings and equipment. Slope ducts from a high point in runs between two manholes to drain in both directions.

B. PVC Joints: Use solvent-cemented joints in ducts and fittings and make watertight according to manufacturer's written instructions. Stagger couplings so those of adjacent ducts do not lie in same plane. Do not use conduit that requires the use of couplings for straight runs. Use acceptable PVC terminal adapters when joining PVC conduit to metallic fittings or rigid metal conduit.

C. Building Wall, Floor, Equipment Pad Penetrations: Make a transition from underground duct to rigid steel conduit at least 5ft before and after penetration without reducing duct line slope away from the building, and without forming a trap in the line. Use fittings manufactured for duct-to-conduit transition. Install conduit penetrations of building walls as specified in Section 26 0533 - Raceway and Boxes for Electrical Systems.

D. Expansion Fittings: Provide suitable expansion fittings or other suitable means to compensate for expansion and contraction for raceways crossing expansion joints in structures or concrete slabs between two adjacent structures and between a duct bank and structure. Provide for the high rate of thermal expansion and contraction of PVC conduit by providing PVC expansion joints as recommended by manufacturer and as required. Refer to structural drawings for location of expansion joints in structures.

E. Sealing: Provide watertight entrance sealing device where an underground conduit enters a structure through a concrete roof or membrane waterproofed wall or floor.

F. Pulling Cord: Install 100 lb test nylon cord in ducts, including spares. Identify with tags at each end and at any intermediate pull point the origin and destination of each spare duct. Provide a removable permanent cap over each end of each spare duct.

G. Concrete Encased Ducts: Support ducts on duct spacers.
   1. Spacer Installation: Space spacers close enough to prevent sagging and deforming of ducts, with not less than 5 spacers per 20 ft of duct. Secure spacers to earth and to ducts to prevent floating during concreting. Stagger spacers approximately 6" between tiers. Tie entire assembly together using tie wires and reinforcing steel. Install base and intermediate spacers at every coupling point of each duct line for a separation horizontally and vertically per NEC.
   2. Concreting Sequence: Pour each run of envelope between manholes or other terminations in one continuous operation.
      a. Start at one end and finish at the other, allowing for expansion and contraction of ducts as their temperature changes during and after the pour. Use expansion fittings installed according to manufacturer's written recommendations, or use other specific measures to prevent expansion-contraction damage.
      b. Terminate each pour in a vertical plane if more than one pour is necessary, and install reinforcing rod dowels as shown on drawings.

3. Pouring Concrete: Space concrete carefully during pours to prevent voids under and between conduits and at exterior surface of envelope. Do not allow a heavy mass of concrete to fall directly onto ducts. Allow concrete to flow to center of bank and rise up in middle, uniformly filling all open spaces.
4. Reinforcement: Reinforce concrete-encased duct banks where they cross disturbed earth and where indicated. Arrange reinforcing bars and ties without forming conductive or magnetic loops around ducts or duct groups. Size reinforcing bars and wire ties as indicated on drawings.
5. Forms: Use walls of trench to form side walls of duct bank where soil is self-supporting and concrete envelope can be poured without soil inclusions; otherwise, use forms of materials and in a manner acceptable to Architect.
6. Warning Tape: Bury warning tape approximately 12” above all concrete-encased ducts and duct banks. Align tape parallel to and on the centerline of duct bank. Provide an additional warning tape for each 12” increment of duct bank width over a nominal 36”.
7. Place duct banks on an undisturbed soil base if possible. Where concrete encased duct bank is installed over an extensive area of disturbed earth such that within the periphery of a building, provide a separate concrete base under the duct bank to ensure stability of raceways during installation. Allow this base to set before duct bank is installed.

H. Stub-Ups:

1. Use manufactured rigid steel conduit elbows for stub-ups at poles and equipment and at building entrances through floor.
   a. Couple steel conduits to PVC ducts with adapters designed for this purpose.
   b. Stub-Ups to Equipment: For equipment mounted on outdoor concrete pads, extend steel conduit horizontally a minimum of 5 ft from edge of equipment pad or foundation. Encase in concrete for concrete encased ducts. Install insulated grounding bushings on terminations at equipment.

I. Arrangement and Routing:

1. Arrange multiple duct runs substantially in accordance with details shown on drawings. Locate underground ducts where indicated on drawings and grade to the elevations shown on civil drawings.
2. Make minor changes in location or cross-section as necessary to avoid obstructions or conflicts. Where duct runs cannot be installed substantially as shown because of conditions not discoverable prior to digging of trenches, refer the condition to the Construction Manager for written instructions before further work is done.
3. Maintain a 12” minimum separation between ducts and other systems in parallel runs. Do not place ducts over valves or couplings in other piping systems. Refer conflicts with these requirements to the Construction Manager for written instructions before further work is done.

## 3.5 EARTHWORK

A. See Civil Engineering Specifications

## 3.6 CONCRETE

A. Concrete: 3000 psi, 28-day strength, complying with Division 03 – Concrete, where concrete encased.

## 3.7 GROUNDING

A. Ground underground ducts according to Section 26 0526 - Grounding and Bonding for Electrical Systems.

## 3.8 FIELD QUALITY CONTROL

A. Perform the following tests and inspections:

1. Demonstrate capability and compliance with requirements on completion of installation of underground ducts.
2. Pull aluminum or wood test mandrel through duct to prove joint integrity and test for out-of-round duct. Provide mandrel equal to 80% fill of duct. If obstructions are indicated, remove obstructions and retest.

B. Preparation for pulling in conductors:

1. Do not install crushed or deformed raceways. Avoid traps in raceways where possible. Take care to prevent the lodging of plaster, concrete, dirt, or trash in raceways, boxes, fittings, and equipment during the course of construction. Make raceways entirely free of obstructions or replace them. Ream all raceways, remove burrs, and clean raceway interior before introducing conductors or pull wires.
2. Immediately after installation, plug or cap all raceway ends with watertight and dust-tight seals until the time for pulling in conductors.

C. Do not backfill underground direct buried and concrete encased ducts until the Engineer has inspected them. Notify Engineer 48 hr in advance of duct concrete pour, or backfill of direct buried ducts.

## 3.9 CLEANING

A. Pull leather-washer-type duct cleaner, with graduated washer sizes, through full length of ducts. Follow with rubber duct swab for final cleaning and to assist in spreading lubricant throughout ducts.

**END OF SECTION**

# SECTION 26 0553 ELECTRICAL SYSTEMS IDENTIFICATION

## PART 1 - GENERAL

### 1.1 RELATED WORK

A. Section 26 0513.6 – Medium-Voltage Single- and Multi-Conductor Cables

B. Section 26 0519 – Low-Voltage Electrical Power Conductors and Cables

C. Section 26 0533 – Raceways and Boxes for Electrical Systems

D. Section 26 2726 – Wiring Devices

E. Section 26 2816 – Enclosed Switches and Circuit Breakers

F. Section 26 2913 – Enclosed Controllers

### 1.2 REFERENCE

A. Work under this Section is subject to requirements of Contract Documents including General Conditions, Supplementary Conditions, and sections under Division 01 - General Requirements.

### 1.3 DESCRIPTION

A. Section includes the following:
   1. Identification for raceways
   2. Identification for conductors and communication and control cable
   3. Equipment identification nameplates
   4. Wiring devices identification

B. Refer to the respective Division 26 Sections, and Sections in other Divisions that specify electrical components, for additional electrical identification requirements.

### 1.4 REFERENCE STANDARDS

A. ANSI A13.1 – Scheme for the Identification of Piping Systems

B. ANSI C2 – National Electrical Safety Code

C. ANSI Z535.4 1998 – National Standards for Product Safety Signs and Labels

D. 29 CFR – Labor, Part 1910 – Occupational Safety and Health Standards, Section 1910.145 – Specifications for Accident Prevention Signs and Tags

E. NFPA 70 – National Electrical Code

F. UL-510 - Polyvinyl Chloride, Polyethylene, and Rubber Insulating Tape

### 1.5 SUBMITTALS

A. Product Data: For each electrical identification product indicated.

B. Nameplate Schedule: Prior to making nameplates, submit a complete schedule to Architect for approval indicating nameplate size, lettering size, color and actual nameplate information.

### 1.6 QUALITY ASSURANCE

A. Comply with ANSI A13.1 and ANSI C2.

B. Comply with ANSI Z535.4-1998

C. Comply with NFPA 70.

D. Comply with 29 CFR 1910.145.

### 1.7 COORDINATION

A. Coordinate identification names, abbreviations, colors, and other features with requirements in Contract Documents, Shop Drawings, manufacturer's wiring diagrams, and Operation and Maintenance Manual, and with those required by codes, standards, and 29 CFR 1910.145. Use consistent designations throughout project.

B. Coordinate installation of identifying devices with completion of covering and painting of surfaces where devices are to be applied.

C. Coordinate installation of identifying devices with location of access panels and doors.

D. Install identifying devices before installing acoustical ceilings and similar concealment.

## PART 2 - PRODUCTS

### 2.1 RACEWAY IDENTIFICATION

A. Fire Alarm Conduit
   1. Material: Refer to Section 26 0533 – Raceways and Boxes for Electrical Systems and Section 28 3113 – Fire Detection and Alarm Systems
   2. Identification: Raceways are to be factory applied permanent red in color for entire length and circumference.
   3. Junction box covers are to be factory or field applied permanent red paint.

B. Raceways and Armored Cable over 600V
   1. Paint "DANGER HIGH VOLTAGE [12,470 or 4160 VOLTS]" with permanent red paint on black background.
   2. Paint is to be water and corrosion resistant for indoor and outdoor applications.
   3. Letters are to be 2" high for 4-5" raceways, 1" high for 3" raceways.

### 2.2 CONDUCTOR AND COMMUNICATION- AND CONTROL-CABLE IDENTIFICATION MATERIALS

A. Comply with ANSI A13.1 for minimum size of letters for legend.

B. Lettered ID Marking Tape Manufacturers: Brady USA, Ideal, Marking Services, Inc. (MRI), Seton, or approved equal.

C. Color-Coding Electrical Conductor Tape: Colored, self-adhesive vinyl tape not less than 3 mils thick by 1" to 2" wide.
   1. UL-510 listed, self adhesive, vinyl electrical tape

D. Marker Tapes: Vinyl or vinyl-cloth, self-adhesive wraparound type, with circuit identification legend machine printed by thermal transfer or equivalent process.

**2.3** EQUIPMENT IDENTIFICATION NAMEPLATES

A. Indoor
   1. Engraved, Three-layer, Laminated Acrylic or Melamine Nameplate: Self adhesive backed. White letters on a black background, except emergency power equipment nameplates are to have white letters on a red background. Minimum letter height shall be 3/8" unless noted otherwise.

B. Outdoor
   1. Engraved, Three-layer, Laminated UV Resistant Acrylic or Melamine Nameplate: Attached with non corrosive mechanical fastener or other permanent method to maintain compliance with NEMA rating of enclosure. White letters on a black background, except emergency power equipment nameplates are to have white letters on a red background. Minimum letter height shall be 1/2" unless noted otherwise.

**2.4 WIRING DEVICES IDENTIFICATION**

A. Refer to Section 26 2726 – Wiring Devices for requirements.

**PART 3 - EXECUTION**

**3.1 APPLICATION**

A. Accessible Raceways and Metal-Clad Cables More Than 600 V: Identify with "DANGER – HIGH VOLTAGE 12,470 or 4160 VOLTS" in permanent paint red letters on black background at least 2" high on 4-5" conduit, 1" high letters on metal clad cable and 3" conduit. Repeat identification at 10 ft maximum intervals and at each termination.
   1. Identify covers of exposed junction and pull boxes with red paint. Stencil the legend "DANGER – HIGH VOLTAGE 12,470 or 4160 VOLTS" in red letters 2" high.
   2. Print identification so it can be seen from all exposed sides of raceway and cable.

B. Power-Circuit Conductor Identification: For conductors #8AWG and larger, use UL-510 vinyl color-coding conductor tape indicating voltage and phase. Smaller conductors are to utilize factory colored insulation only.

C. Branch Circuit Conductors: Identify conductor source and circuit number at load terminations, and junction boxes using cloth tape and permanent ink. Identify circuit number only at source termination using pre-printed wrap-around identification tape.

D. Equipment Grounding and Bonding Conductor Identification: For conductors #1/0 and larger, use green UL-510 vinyl conductor tape. Smaller conductors are to utilize factory colored insulation only.

E. Isolated Ground Conductor: All conductors are to have factory green insulation with yellow stripe. Field applied color coded tape identification is not allowed.

F. Auxiliary Electrical Systems Conductor Identification: Identify field-installed alarm, control, signal, sound, intercommunications, voice, and data connections.
   1. Identify conductors, cables, and terminals in enclosures and at junctions, terminals, and pull points. Identify by system and circuit designation.
   2. Use system of marker tape designations that is uniform and consistent with system used by manufacturer for factory-installed connections.
   3. Coordinate identification with project drawings, manufacturer's wiring diagrams, and Operation and Maintenance Manual.

G. Equipment Identification Nameplates: On each unit of equipment, install unique designation nameplate that is consistent with wiring diagrams, schedules, and Operation and Maintenance Manual. Apply nameplates to disconnect switches and protection equipment, central or master units, control panels, control stations, terminal cabinets, and racks of each system. Systems include power, lighting, control, communication, signal, monitoring, and alarm systems unless equipment is provided with its own identification.
   1. Nameplate Instructions:
      a. Indoor Equipment: Engraved, laminated acrylic self adhesive backed. Unless otherwise indicated, provide a single line of text with 3/8" high letters on 1-1/2" high nameplate; where 2 lines of text are required, use nameplates sized 2" high.
      b. Outdoor Equipment: Engraved, laminated UV resistant acrylic nameplates with 1/2" high letters. Outdoor equipment labels are to be factory applied with non-corrosive mechanical fasteners or other permanent method to maintain compliance with NEMA rating of enclosure.
      c. Elevated Components: Increase sizes of labels and letters to those appropriate for viewing from the floor.
      d. Any label that belongs to equipment within the emergency power subsystem shall be RED with white lettering. All other labels shall be BLACK with white lettering. Additionally, all labels will have at least two lines—one designating the component name and the other designating the component's power source. In the case of a component with multiple feeds, there shall be separate line for each power source component name.
   2. Install nameplates for equipment including, but not limited to, the following:
      a. Panelboards, electrical cabinets, and enclosures
      b. Access doors and panels for concealed electrical items
      c. Electrical switchgear, distribution panelboards, and switchboards, including each device within the equipment enclosures.
      d. Transformers
      e. Electrical substations
      f. Emergency system boxes and enclosures
      g. Disconnect switches
      h. Enclosed circuit breakers
      i. Motor controllers
      j. Pushbutton stations
      k. Automatic Transfer Switches
      l. Contactors
      m. Remote-controlled switches, dimmer modules, and control devices
      n. Voice and data cable terminal equipment
      o. Fire alarm control panel and annunciators
      p. Security and intrusion-detection control stations, control panels, terminal cabinets, and racks
      q. Monitoring and control equipment
      r. Uninterruptible power supply equipment
      s. Terminals, racks, and patch panels for voice and data communication and for signal and control functions
      t. Non-concealed junction box covers of auxiliary electrical systems

H. Nameplates shall indicate equipment identification and shall be same as indicated on contract documents. Voltages shall be shown on panelboard nameplates.

## 3.2 INSTALLATION

A. Verify identity of each item before installing identification products.

B. Location: Install identification materials and devices at locations for most convenient viewing without interference with operation and maintenance of equipment.

C. Apply identification devices to surfaces that require finish after completing finish work.

D. Self-Adhesive Identification Products: Clean surfaces before application, using materials and methods recommended by manufacturer of identification device.

E. System Identification Color Banding for Conductors: Each color band shall completely encircle conductor. Locate bands at source and load terminations and at all junction and tap boxes.

F. Color-Coding for Phase and Voltage Level Identification, 600 V or Less: Use colors listed below for ungrounded conductors.
   1. Colors for 208/120 V Circuits:
      a. Phase A (left bus in panelboard): Black
      b. Phase B (center bus in panelboard): Red
      c. Phase C (right bus in panelboard): Blue
      d. Neutral: White
      e. Equipment Ground: Green
      f. Isolated Ground: Green with yellow stripe
   2. Colors for 480/277 V Circuits:
      a. Phase A (left bus in panelboard): Brown
      b. Phase B (center bus in panelboard): Orange
      c. Phase C (right bus in panelboard): Yellow
      d. Neutral: Gray
      e. Equipment Ground: Green
      f. Isolated Ground: Green with yellow stripe

   3. Field-applied, Color-Coding Conductor Tape: Apply no more than 2” wide using multiple turns. Apply last two runs of tape with no tension to prevent possible unwinding. Locate bands to avoid obscuring factory cable markings where possible.

G. Painted Identification: Prepare surface and apply paint according to paint manufacturer’s instructions. Do not use cleaning solvents that will harm surface to be painted.

**END OF SECTION**

# SECTION 26 0593 ELECTRICAL SYSTEMS FIRESTOPPING

## PART 1 - GENERAL

### 1.1 RELATED WORK

A. Section 26 0533 – Raceways and Boxes for Electrical Systems

B. See Architectural Specification sections for additional firestopping requirements.

### 1.2 REFERENCE

A. Work under this Section is subject to requirements of Contract Documents including General Conditions, Supplementary Conditions, and sections under Division 01 - General Requirements.

### 1.3 DESCRIPTION

A. Section includes through-penetration firestop systems for penetrations through fire-resistance-rated constructions (walls, partitions, floors, and ceilings) including both empty openings and openings containing electrical penetrating items, including but not limited to raceways, cables, cable trays, busways, and wireways.

### 1.4 REFERENCE STANDARDS

A. ASTM E-814 – Standard Test Method for Fire Tests of Through-Penetration Firestops

B. UL 1479 - Fire Tests of Through-Penetration Firestops

C. UL 2079 - Tests For Fire Resistance of Building Joint Systems

### 1.5 PERFORMANCE REQUIREMENTS

A. Provide firestop system to resist spread of fire, resist passage of smoke and other gases, and maintain original fire-resistance rating of construction penetrated.

B. Firestop systems shall be UL Classified for the application and correspond to those indicated by reference to designations listed by UL Fire Resistance Directory.

C. Conform to applicable Code requirements of Authority Having Jurisdiction.

D. For through-penetration firestop systems exposed to view, traffic, moisture, and physical damage, provide products that, after curing, do not deteriorate when exposed to these conditions.

### 1.6 SUBMITTALS

A. Product Data: For each type of product indicated.

B. Shop Drawings: For each through-penetration firestop system, show each type of construction condition penetrated, relationships to adjoining construction and type of penetrating item. Include firestop design designation of qualified testing and inspecting agency that evidences compliance with requirements for each condition indicated.

1. Submit documentation, including illustrations, from a qualified testing and inspecting agency that is applicable to each through-penetration firestop system configuration for construction and penetration items, including documentation of UL certification for firestop systems.

C. Manufacturer's Installation Instructions: Indicate application conditions and limitations of use stipulated by product testing agency. Include instructions for storage, handling, protection, examination, preparation, and installation of product.

D. Material Safety Data Sheets provided with product delivered to job site.

E. Certification of compliance with Building Codes of Project location.

F. Inspection reports

## 1.7 QUALITY ASSURANCE

A. Installer Qualifications: A firm experienced in installing through-penetration firestop systems similar in material, design, and extent to that indicated for this Project, whose work has resulted in construction with a record of successful performance.

B. Firestopping tests shall be performed by a qualified testing and inspecting agency, or another agency performing testing and follow-up inspection services for firestop systems acceptable to Authorities Having Jurisdiction.

C. Manufacturer's representative shall be on-site during initial installation of firestop systems to train appropriate Contractor personnel in proper selection and installation procedures.

## 1.8 DELIVERY, STORAGE AND HANDLING

A. Deliver through-penetration firestop system products to Project site in original, unopened containers or packages with intact and legible manufacturers' labels identifying product, type and manufacturer, and UL Label where applicable.

B. Store and handle materials for through-penetration firestop systems to prevent their deterioration or damage due to moisture, temperature changes, contaminants, or other causes.

C. Handle in accordance with recommended procedures, precautions, or remedies described in material safety data sheets as applicable.

## 1.9 PROJECT CONDITIONS

A. Do not install through-penetration firestop systems when ambient or substrate temperatures are outside limits permitted by through-penetration firestop systems' manufacturers or when substrates are wet due to rain, frost, condensation, or other causes.

B. Ventilate through-penetration firestop systems per manufacturers' written instructions by natural means or, where this is inadequate, forced-air circulation.

## 1.10 COORDINATION

A. Coordinate construction of openings and penetrating items to ensure that through-penetration firestop systems are installed according to specified requirements.

B. Coordinate sizing of sleeves, openings, core-drilled holes, or cut openings to accommodate through-penetration firestop systems.

C. Notify Owner's inspecting agency at least 7 days in advance of through-penetration firestop system installations; confirm dates and times on days preceding each series of installations.

D. Do not cover up through-penetration firestop system installations that will become concealed behind other construction until each installation has been examined by building inspector, if required by Authorities Having Jurisdiction.

### 1.11 SEQUENCING

A. Sequence work to avoid interferences with building finishes and installation of other products.

### 1.12 WARRANTY

A. Refer to Division 01 and Section 26 0000 – General Electrical Requirements for general warranty requirements.

B. Manufacturer shall provide standard 1 yr warranty against defects in materials and workmanship for products specified in this Section. Warranty period shall begin on date of substantial completion.

## PART 2 - PRODUCTS

### 2.1 MANUFACTURERS

A. 3M (Fire Protection Products Division), Hilti Inc, Tremco (Sealant/Weatherproofing Division), Nelson Firestop Products, Specified Technologies Inc, RectorSeal Corporation, approved equal.

B. Pyrophobic Systems, Ltd - Intumescent Technologies FireBlok fire suppression gasket for use in 4” X 4” X 2-1/8” boxes.

### 2.2 MATERIALS

A. Firestop Products: UL 1479, ASTM E-814 tested for specific fire-rated construction conditions conforming to construction assembly type, penetrating item type, annular space requirements and fire-rating involved for each separate instance; materials shall not contain flammable solvents.

B. Firestop Systems: Produced by the same manufacturer.

C. Fire Suppression Gaskets: Single piece gasket for use in 4” X 4” X 2-1/8” or smaller recessed electrical boxes in walls rated up to 2 hr.

D. Accessories: Components for each through-penetration firestop system that are needed to install fill materials and to comply with Part 1 “Performance Requirements” Article. Accessories include the following items:
   1. Permanent forming/damming/backing materials
   2. Temporary forming materials
   3. Substrate primers
   4. Collars
   5. Steel sleeves

E. Fill Materials: Including the following:
   1. Firestop putty, caulk sealant, intumescent wrap strips, intumescent firestop collars, firestop mortars, pillows/bags, or a combination of these products to provide a UL-listed system for each application required for this Project; mineral wool backing where specified in manufacturer’s application detail.

F. Mixing

1. For those products requiring mixing before application, comply with through-penetration firestop system manufacturer's written instructions for accurate proportioning of materials, water (if required), type of mixing equipment, selection of mixer speeds, mixing containers, mixing time, and other items or procedures needed to produce products of uniform quality with optimum performance characteristics for application indicated.

## PART 3 - EXECUTION

### 3.1 EXAMINATION

A. Examine areas and conditions for compliance with requirements for opening configurations, penetrating items and other conditions affecting performance of firestopping.

B. Do not proceed with installation until unsatisfactory conditions have been corrected.

### 3.2 PREPARATION

A. Clean out openings immediately prior to installing through-penetration firestop system to comply with firestop system manufacturer's written instructions.

B. Provide masking and temporary covering to prevent soiling of adjacent surfaces by firestopping materials.

C. Comply with manufacturer's recommendations for temperature and humidity conditions before, during and after installation of firestopping.

D. Install fire suppression gaskets inside electrical boxes before conductors are pulled. Install per manufacturer's requirements.

### 3.3 INSTALLATION

A. Comply with "System Performance Requirements" Article in Part 1 and with firestop system manufacturer's written installation instructions and drawings for products and applications indicated.

B. Install forming/damming/backing materials and other accessories of types required to support fill materials during application as required. After installing fill materials and allowing them to fully cure, remove combustible forming materials and other accessories not indicated as permanent components of firestop systems.

C. Avoid multiple penetrations of common fire barrier opening. Seal each penetration in accordance with manufacturer's UL installation details. When multiple penetrations are unavoidable, seal openings with appropriate UL Classified firestopping systems.

D. Adhere fire suppression gaskets to inside, rear of electrical box with attached adhesive strips.

### 3.4 IDENTIFICATION

A. Identify through-penetration firestop systems with pressure-sensitive, self-adhesive, preprinted vinyl labels. Attach labels permanently to surfaces of penetrated construction on both sides of each firestop system installation where labels will be visible to anyone seeking to remove penetrating items or firestop systems. Include the following information on labels:
   1. The words: "Warning—Through-Penetration Firestop System—Do Not Disturb. Notify Building Management of Any Damage."
   2. Contractor's name, address, and phone number
   3. Through-penetration firestop system designation of applicable testing and inspecting agency

4. Date of installation
5. Through-penetration firestop system manufacturer's name
6. Installer's name

## 3.5 FIELD QUALITY CONTROL

A. Inspecting Agency: Owner will engage a qualified independent inspecting agency to inspect through-penetration firestop systems and to prepare test reports.
   1. Inspecting agency will state in each report whether inspected through-penetration firestop systems comply with or deviate from requirements.

B. Provide certification by Installer that all through-penetration firestop systems have been firestopped in accordance with applicable Building Codes of Project location.

C. Proceed with enclosing through-penetration firestop systems with other construction only after inspection reports are issued and firestop installations comply with requirements.

D. Where deficiencies are found, repair or replace through-penetration firestop systems so they comply with specifications.

## 3.6 CLEANING

A. Clean surfaces adjacent to sealed holes and joints to be free of excess firestop materials and soiling as work progresses.

**END OF SECTION**

# SECTION 26 0812 POWER DISTRIBUTION ACCEPTANCE TESTS

## PART 1 - GENERAL

### 1.1 RELATED WORK

A. Section 26 0513.16 – Medium-Voltage, Single- and Multi-Conductor Cables

B. Section 26 0519 – Low-Voltage Electrical Power Conductors and Cables

C. Section 26 0526 – Grounding and Bonding for Electrical Systems

D. Section 26 1219 – Pad-Mounted, Liquid-Filled, Medium-Voltage Transformers

E. Section 26 2816 – Enclosed Switches and Circuit Breakers

F. Section 26 2913 – Enclosed Controllers

### 1.2 REFERENCE

A. Work under this section is subject to requirements of Contract Documents including General Conditions, Supplementary Conditions and sections under Division 01 General Requirements.

### 1.3 DESCRIPTION

A. Section includes acceptance testing requirements for assessing the suitability for service and reliability of the power distribution system.

B. It is the purpose of this specification to assure all tested electrical equipment, both contractor and Owner supplied, is operational and within industry and manufacturer's tolerances and is installed in accordance with design specifications.

C. Tests and inspections shall be performed after installation.

D. Tests and inspections shall determine suitability for energization.

E. Electrical systems shall pass tests prior to substantial completion or Owner occupancy.

F. This specification requires contractor to engage services of NETA certified testing agency.

G. All tests tables referenced in this specification provided in Section 26 0813 – Power Distribution Acceptance Test Tables.

H. Items to be tested and inspected as follows:
   1. 600-volt conductors and cables
   2. Medium-voltage cables
   3. Low-voltage insulated-case/molded-case circuit breakers
   4. Liquid filled transformers
   5. Low-voltage disconnect switches
   6. Motor controllers
   7. Ground fault protection systems

8. Grounding systems
9. Thermographic survey

1.4 **REFERENCE STANDARDS**

A. ANSI/IEEE C2 – National Electrical Safety Code

B. ANSI/IEEE C37 – Guides and Standards for Circuit Breakers, Switchgear, Relays, Substations, and Fuses

C. ANSI/IEEE C57 – Distribution, Power, and Regulating Transformers

D. ANSI/IEEE C62 – Surge Protection

E. ANSI/IEEE Std. 43 – IEEE Recommended Practice for Testing Insulation Resistance of Rotating Machinery

F. ANSI/IEEE Std. 81 – Guide for Measuring Earth Resistivity, Ground Impedance, and Earth Surface Potentials of a Ground System

G. ANSI/IEEE Std. 141 – IEEE Recommended Practice for Electrical/Power Distribution for Industrial Plants (IEEE Red Book)

H. ANSI/IEEE Std. 142 – IEEE Recommended Practice for Grounding of Industrial and Commercial Power Systems (IEEE Green Book)

I. ANSI/IEEE Std. 241 – IEEE Recommended Practice for Electrical Power Systems in Commercial Buildings (IEEE Gray Book)

J. ANSI/IEEE Std. 242 – IEEE Recommended Practice for Protection and Coordination of Industrial and Commercial Power Systems (IEEE Buff Book)

K. ANSI/IEEE Std. 399 – IEEE Recommended Practice for Power Systems Analysis (IEEE Brown Book)

L. ANSI/IEEE Std. 446 – IEEE Recommended Practice for Emergency and Standby Power Systems for Industrial and Commercial Applications (IEEE Orange Book)

M. ANSI/IEEE Std. 493 – IEEE Recommended Practice for the Design of Reliable Industrial and Commercial Power Systems (IEEE Gold Book)

N. ANSI/IEEE Std. 1100 – IEEE Recommended Practice for Powering and Grounding Sensitive Electronic Equipment (IEEE Emerald Book)

O. NETA – Acceptance Testing Specifications for Electrical Power Distribution Equipment and Systems

P. NEMA AB 4 – Guidelines for Inspection and Preventive Maintenance of Molded-Case Circuit Breakers Used in Commercial and Industrial Applications

Q. NEMA MG1 – Motors and Generators

R. NFPA 70 – National Electrical Code

S. NFPA 70B – Recommended Practice for Electrical Equipment Maintenance

T. NFPA 70E – Electrical Safety Requirements for Employee Workplaces

U. NFPA 101 – Life Safety Code

V. NFPA 110 – Emergency and Standby Power Systems

W. NIST – National Institute of Standards and Technology

X. OSHA – Part 1910 – Subpart S – 1910.308 – Special Systems

## 1.5 SUBMITTALS

A. Test Reports: Include the following:
   1. Summary of project
   2. Description of equipment tested
   3. Equipment used to conduct the test
   4. Description of test
   5. Test results, as compared to manufacturers' or industry accepted standards and tolerances
   6. Conclusions and recommendations
   7. Signature of responsible test organization authority

B. List of equipment used to perform tests. Identify the following:
   1. Type
   2. Manufacturer
   3. Model number
   4. Serial number
   5. Date of last calibration
   6. Documentation of calibration leading to NIST standards

## 1.6 QUALITY ASSURANCE

A. Qualifications of Testing Agency:
   1. Testing firm shall be a corporately and financially independent testing organization that can function as an unbiased testing authority, professionally independent of the manufacturer, supplier, and installers of equipment or system evaluated by the testing firm.
   2. Testing firm shall be regularly engaged in testing of electrical equipment, devices, installations and systems.
   3. Testing firm shall meet Federal Occupational Safety and Health Administration (OSHA) requirements for accreditation of independent testing laboratories.
   4. On-site technical person shall be currently certified by the InterNational Electrical Testing Association in electrical power distribution system testing.
   5. Testing firm shall use technicians who are regularly employed by the firm for testing services.
   6. Testing firm shall submit proof of above qualifications with bid documents when requested.

## PART 2 - PRODUCTS

2.1 Not applicable to this Section.

## PART 3 - EXECUTION

### 3.1 PREPARATION

A. Documentation: Deliver the following to testing firm, minimum two weeks prior to commencement of testing:
   1. Complete set of electrical plans and specifications, with available short circuit indicated on power riser diagrams.
   2. Approved submittals and shop drawings of equipment being tested.
   3. Pertinent change orders.
   4. Evaluation, overcurrent protective device coordination and arc flash studies provided by Engineer.

B. Schedule: Notify Owner and Engineer 10 working days prior to performance of any tests.

C. Coordination: Coordinate with Construction Manager/Owner/Engineer the testing schedule and availability of equipment ready for testing.

D. Test Power: Provide test power (including specialized) for equipment testing before and after service energizing.

### 3.2 FIELD QUALITY CONTROL

A. Inspection and Test Procedures: Comply with NETA.
   1. 600 V Conductors and Cables:
      a. Visual and Mechanical Inspection:
         1) Compare cable data with drawing and specifications.
         2) Inspect exposed sections of cables for physical damage.
         3) Verify tightness of accessible bolted electrical connections by calibrated torque wrench in accordance with manufacturer's published data or Table 12.
         4) Perform thermographic survey of bolted electrical connections in accordance with paragraph "Thermographic Survey."
         5) Inspect compression-applied connectors for correct cable match and indentation.
         6) Verify visible cable bends meet or exceed ICEA and manufacturer's minimum allowable bending radius.
         7) For cables are terminated through window-type current transformers, provide an inspection to verify neutral and ground conductors are correctly placed for operation of protective devices.
         8) Inspect for correct identification and arrangements.
         9) Inspect jacket and insulation condition.
      b. Electrical Tests:
         1) Perform insulation-resistance test using megohm meter. Applied potential to be 1000 VDC. Individually test each conductor with other conductors grounded. Test duration shall be one minute.
         2) Perform continuity tests to insure correct cable connection.

c. Test Values:
   1) Insulation-resistance values should not be less than 50 megohms.

2. Medium-Voltage Cables:
   a. Visual and Mechanical Inspection:
      1) Compare cable date with drawings and specifications.
      2) Inspect exposed sections of cables for physical damage.
      3) Verify tightness of accessible bolted connections by calibrated torque wrench in accordance with manufacturer's published data or Table 12.
      4) Perform thermographic survey of bolted electrical connections in accordance with paragraph "Thermographic Survey."
      5) Inspect compression-applied connectors for correct cable match and indentation.
      6) Inspection for shield grounding, cable support, and termination.
      7) Verify visible cable bends meet or exceed ICEA and manufacturer's minimum allowable bending radius.
      8) Inspect for adequate fireproofing in common cable areas, if specified.
      9) For cables are terminated through window-type current transformers, provide an inspection to verify neutral and ground conductors are correctly placed and shields are correctly terminated for operation of protective devices.
      10) Inspect jacket and insulation condition.
      11) Inspect for correct identification and arrangements.
   b. Electrical Tests:
      1) Perform shield-continuity test on each power cable by ohmmeter method and record value.
      2) Perform insulation-resistance test using megohm meter with voltage output of at least 2500 V. Individually test each conductor with other conductors and shields grounded. Test duration shall be 1 minute.
      3) Perform DC high-potential test on cables, including terminations and joints after cable system installation and before placing cable in service. Adhere to precautions and limits as specified in applicable NEMA/ICEA Standards for the specific cable. Perform tests in accordance with ANSI/IEEE Standard 400. Test voltages shall not exceed 80% of cable manufacturer's factory test value or maximum test voltage in Table 6.
         a) Insure input voltage to test set is regulated.
         b) Current-sensing circuits in test equipment shall measure only leakage current associated with cable under test and shall not include internal leakage of test equipment.
         c) Record wet- and dry-bulb temperatures or relative humidity and temperature.
         d) Test each section of cable individually.
         e) Individually test each conductor with other conductors grounded. Ground shields.
         f) Terminations shall be adequately corona-suppressed by guard ring, field reduction sphere, or other suitable method as necessary.
         g) Insure maximum test voltage does not exceed limits for terminators specified in ANSI/IEEE Standard 48 or manufacturer's specifications.
         h) Apply DC high-potential test in at least 5 equal increments until maximum test voltage is reached. No increment shall exceed voltage rating of the cable.

Record DC leakage current at each step after constant stabilization time consistent with system charging current.

i) Raise conductor to specified maximum test voltage and hold for 15 minutes on shielded cable and 5 minutes on non-shielded cable. Record readings of leakage current at 30 seconds and one minute and at one-minute intervals thereafter.

j) Reduce conductor test potential to zero and measure residual voltage at discrete intervals.

k) Apply grounds for time period adequate to drain insulation stored charge.

l) When new cables are spliced into existing cables, DC high-potential test shall be performed on new cable prior to splicing in accordance with this section. After test results are approved for new cable and splice is complete, perform insulation-resistance test and shield-continuity test on the length of new and existing cable including the splice. After satisfactory insulation-resistance test, DC high-potential test shall be performed on cable using test voltage acceptable to Owner and not exceeding 60% of factory test value.

c. Test Values:

1) Shielding must exhibit continuity. Investigate resistance values in excess of 10 ohms per 1000 ft of cable.

2) Graphic plots may be made of leakage current versus step voltage at each increment and leakage current versus time at final test voltages.

a) Step voltage slope should be reasonably linear.

b) Capacitive and absorption current should decrease continually until steady state leakage is approached.

3. Liquid Filled Transformers:

a. Visual and Mechanical Inspection:

1) Compare equipment nameplate data with drawings and specifications.

2) Inspect physical and mechanical condition for physical damage, cracked insulators, and tightness of connection.

3) Verify removal of shipping bracing after final placement.

4) Inspect impact recorder prior to unloading, if applicable.

5) Verify alarm, control, and trip settings on temperature and level indicators are as specified.

6) Verify cooling fans and pumps operate correctly and fans and pump motors have correct overcurrent protection.

7) Verify operation of alarm, control, and trip circuits from temperature and level indicators, pressure relief device, and fault pressure relay.

8) Verify tightness of accessible bolted electrical connections by calibrated torque-wrench method in accordance with manufacturer's published data or Table 12.

9) Perform thermographic survey in accordance with paragraph "Thermographic Survey."

10) Verify correct liquid level in tanks and bushings.

11) Perform specific inspections and mechanical tests as recommended by manufacturer.

12) Verify correct equipment grounding.

13) Verify seismic bracing is correct.

b. Electrical Tests:
   1) Perform insulation-resistance tests, winding-to-winding and each winding-to-grounding with test voltage in accordance with Table 5. Test duration shall be for 10 minutes with resistance tabulated at 30 seconds, 1 minute, and 10 minutes.
   2) Calculate polarization index.
   3) Perform a turns-ratio test on no-load tap-changer positions and load tap-changer positions. Verify tap setting is as specified. Verify winding polarities are in accordance with nameplate.
   4) Perform insulation power-factor/dissipation-factor tests on windings and correct to 20°C(68°F) in accordance with test equipment manufacturer's instructions.
   5) Perform power-factor/dissipation-factor tests (or hot collar watts-loss tests) on bushings and correct to 20°C(68°F) in accordance with test equipment manufacturer's instructions.
   6) Perform excitation-current tests in accordance with test equipment manufacturer's instructions.
   7) Measure resistance of each high-voltage winding in each no-load tap-changer position. Measure resistance of each low-voltage winding in each load tap-changer position, if applicable.
   8) If core ground strap is accessible, measure core insulation resistance at 500 VDC.
   9) Measure percentage of oxygen in nitrogen blanket.
   10) Remove sample of insulating liquid in accordance with ASTM D923. Sample shall be tested for the following:
      a) Dielectric breakdown voltage: ASTM D877 and/or ASTM D1816.
      b) Acid neutralization number: ASTM D974.
      c) Specific gravity: ASTM D1298.
      d) Interfacial tension: ASTM D971 or ASTM D2285.
      e) Color: ASTM D1500.
      f) Visual condition: ASTM D1524.
      g) Measure dissipation factor or power factor in accordance with ASTM D924.
   11) Remove sample of insulating liquid in accordance with ASTM D3613 and perform dissolved gas analysis (DGA) in accordance with ANSI/IEEE C57.104 or ATSM D3612.
   12) Test instrument transformers in accordance with paragraph "Instrument Transformers."
   13) Test surge arresters in accordance with paragraph "Surge Arresters."

c. Test Values:
   1) Bolt-torque levels shall be in accordance with Table 12, unless otherwise specified by manufacturer.
   2) Insulation-resistance test values at one minute should not be less than values recommended in Table 5. Resistance values to be temperature corrected in accordance with Table 14.
   3) Polarization index should be compared to manufacturer's factory test results. If manufacturer's data is not available, acceptance test results will serve as baseline data.
   4) Turns-ratio test results shall not deviate more than 0.5% from either the adjacent coils or the calculated ratio.

5) Maximum power factor of liquid-filled transformers corrected to 20°C(68°F) shall be in accordance with transformer manufacturer's published data. Representative values are shown in Table 3. Compare with test equipment manufacturer's published data.
6) Investigate bushing power factors and capacitances that vary from nameplate values by more than 10%. Investigate any bushing hot collar watts-loss results that exceed test equipment manufacturer's published data.
7) Typical excitation-current test data pattern for three-legged core transformer is two similar current readings and one lower current reading.
8) Consult manufacturer if winding-resistance measurements vary more than 1% from adjacent windings.
9) Consult manufacturer if core insulation is less than one megohm at 500 VDC.
10) Insulating liquid shall comply with Table 4.
11) Evaluate results of dissolved-gas analysis in accordance with IEEE Standard C57.104. Use results as baseline for future tests.

4. Electrical Metering:
   a. Visual and Mechanical Inspection:
      1) Compare equipment nameplate data with drawings and specifications.
      2) Inspect physical and mechanical condition.
      3) Verify tightness of electrical connections.
      4) Inspect cover gasket, cover glass, condition of spiral spring, disc clearance, contacts, and case-shorting contacts, as applicable.
      5) Verify freedom of movement, correct travel and alignment, and tightness of mounting hardware.
   b. Electrical Tests:
      1) Check calibration of meters at cardinal points.
      2) Calibrate watt-hour meters according to manufacturer's published data.
      3) Verify instrument multipliers.
      4) Electrically confirm current transformer and voltage transformer secondary circuits are intact.
5. Low-Voltage Insulated-Case/Molded-Case Circuit Breakers, 225A and Larger:
   a. Visual and Mechanical Inspection:
      1) Compare nameplate date with drawings and specifications.
      2) Inspect circuit breaker for correct mounting.
      3) Check cell fit, element alignment and racking mechanism for draw-out breakers.
      4) Operate circuit breaker to insure smooth operation.
      5) Inspect case for cracks or other defects.
      6) Verify tightness of accessible bolted electrical connections and/or cable connections by calibrated torque-wrench method in accordance with manufacturer's published data or Table 12.
      7) Inspect mechanism contacts and arc chutes in unsealed units.
   b. Electrical Tests:
      1) Perform a contact-resistance test.
      2) Perform insulation-resistance test at 1000 VDC from pole-to-pole and from each pole-to-ground with breaker closed and across open contacts of each phase. Test

duration shall be one minute. Use a minimum test voltage in accordance with Table 1 or manufacturer's published data.

3) Perform insulation-resistance test at 1000 VDC on all control wiring. Test duration shall be one minute. Do not perform the test on wiring connected to solid-state components. Follow manufacturer's recommendation.
4) Perform adjustments for final trip settings in accordance with overcurrent protective device coordination study.
5) Perform long-time delay time-current characteristic tests by passing 300% rated current through each pole separately, unless series testing is required to defeat ground fault functions.
6) Determine short-time pickup and delay by primary current injection.
7) Determine ground-fault pickup and time delay by primary current injection.
8) Determine instantaneous pickup current by primary injection using run-up or pulse method.
9) Verify correct operation of auxiliary features such as trip and pickup indicators, zone interlocking, electrical close and trip operation, trip-free, and anti-pump function.
10) Verify trip unit calibrations by secondary injection.
11) Determine minimum operation voltage on shunt trip and close coils in accordance with Table 20.
12) Check charging mechanism.

c. Test Values:

1) Bolt-torque levels shall be in accordance with Table 12, unless otherwise specified by manufacturer.
2) Compare microhm or millivolt drop values to adjacent poles or similar breakers. Investigate deviations of more than 50% of lowest value. Investigate any value exceeding manufacturer's recommendations.
3) Circuit breaker insulation-resistance shall be in accordance with Table 1.
4) Control wiring insulation-resistance shall comply with manufacturer's published data. In the absence of manufacturer's published data, use Table 1. Values of insulation resistance less than this table or manufacturer's minimum shall be investigated.
5) Trip characteristic of breakers shall fall within manufacturer's published time-current characteristic tolerance band, including adjustment factors. If manufacturer's curves are not available, trip times shall not exceed the value shown in Table 7. Circuit breakers exceeding specified trip time at 300% of pickup shall be tagged defective.
6) For molded-case circuit breakers, instantaneous pickup values shall be within manufacturer's published data or tolerances shown in Table 8.
7) Minimum operation voltages on shunt trip and close coils shall be in accordance with manufacturer's published data. In the absence of manufacturer's data, refer to Table 20.

6. Low-Voltage Disconnect Switches:

a. Visual and Mechanical Inspection:

1) Compare equipment nameplate data with drawings and specifications.
2) Inspect physical and mechanical condition.
3) Inspect anchorage, alignment, grounding, and required clearances.
4) Verify correct blade alignment, blade penetration, travel stops, and mechanical operation.

5) Verify that fuse sizes and types are in accordance with drawings, short-circuit and overcurrent protective device coordination studies.
6) Verify that each fuse has adequate mechanical support and contact integrity.
7) Verify tightness of accessible bolted electrical connections by calibrated torque-wrench method in accordance with manufacturer's published data or Table 12.
8) Perform thermographic survey of accessible bolted electrical connection in accordance with paragraph "Thermographic Survey."
9) Verify operation and sequencing of interlocking systems.
10) Verify correct phase barrier installation.
11) Verify correct operation of all indicating and control devices.
12) Confirm correct application of manufacturer's recommended lubricants.

b. Electrical Tests:
1) Measure contact resistance across each switchblade and fuseholder.
2) Perform insulation-resistance test at 1000 VDC from pole-to-pole and from each pole-to-ground. Test duration shall be one minute. Use a minimum test voltage in accordance with Table 1 or manufacturer's published data.
3) Measure fuse resistance.
4) Perform ground fault test, if applicable.

c. Test Values:
1) Compare bolted connection resistances to values of similar connections.
2) Bolt-torque levels should be in accordance with Table 12, unless otherwise specified by the manufacturer.
3) Compare microhm or millivolt drop values to adjacent poles or similar switches. Investigate deviations of more than 50% of lowest value. Investigate any value exceeding manufacturer's recommendations.
4) Minimum insulation-resistance shall be in accordance with manufacturer's published data or Table 1.
5) Investigate fuse-resistance values that deviate from each other by more than 15%.

7. Motor Controllers:
a. Visual and Mechanical Inspection:
1) Compare equipment nameplate data with drawings and specifications.
2) Inspect physical and mechanical condition.
3) Inspect anchorage, alignment and grounding.
4) Verify tightness of accessible bolted electrical connections by calibrated torque-wrench method in accordance with manufacturer's published data or Table 12.
5) Verify controller mechanical operations. Inspect gap, wipe, alignment, and pressure are in accordance with manufacturer's published data.
6) Verify motor running protection installed and properly sized.
7) Confirm correct application of manufacturer's recommended lubricants.

b. Electrical Tests:
1) Perform resistance tests through all bus joints with low-resistance ohmmeter. Any joints that cannot be directly measured due to permanently installed insulation wrap shall be indirectly measured from closest accessible connection.
2) Perform insulation-resistance tests on each bus section, phase-to-phase and phase-to-ground with controller closed and across each open pole. Test duration shall be

one minute. Use a test voltage in accordance with Table 1 or manufacturer's published data. For control devices that cannot tolerate test voltage, follow manufacturer's recommendations.

3) Perform insulation-resistance tests at 1000 VDC on control wiring. Test duration shall be one minute. Do not perform this test on wiring connected to solid-state components. Follow manufacturer's recommendations.

4) Test motor protection devices in accordance with manufacturer's published data. In the absence of manufacturer's data, use paragraph "Protective Relays."

5) Test circuit breakers in accordance with paragraph "Low-Voltage Insulated-Case/Molded-Case Circuit Breakers."

6) Perform operational tests by initiating control devices.

c. Test Values:

1) Bolt-torque levels shall be in accordance with Table 12, unless otherwise specified by manufacturer.

2) Compare bus connection resistances to values of similar connections.

3) Insulation-resistance values for bus, control wiring, and control power transformers shall be in accordance with manufacturer's published data. In the absence of manufacturer's published data, use Table 1. Values of insulation-resistance less than this table or manufacturer's minimum should be investigated.

4) Motor protection parameters shall be in accordance with manufacturer's published data.

8. Ground Fault Protection Systems:

a. Visual and Mechanical Inspection:

1) Compare equipment nameplate data with drawings and specifications.

2) Visually inspect components for damage and errors in polarity or conductor routing:

a) Verify ground connection is made ahead of neutral disconnect link and on line side of any ground fault sensor.

b) Verify neutral sensors are connected with correct polarity on both primary and secondary.

c) Verify all phase conductors and neutral pass through sensor in same direction for zero sequence systems.

d) Verify grounding conductors do not pass through zero sequence sensors.

e) Verify grounded conductor is solidly grounded.

3) Verify tightness of accessible bolted electrical connections, including control circuits, by calibrated torque-wrench method in accordance with manufacturer's published data or Table 12.

4) Verify correct operation of self-test panel.

5) Set pickup and time-delay settings in accordance with settings provided on drawings and in specifications. Record operation and test sequences as required by NFPA 70.

6) Verify the control power transformer has adequate capacity for the system.

b. Electrical Tests:

1) Measure system neutral-to-ground insulation resistance with neutral disconnect link temporarily removed. Replace neutral disconnect link after testing.

2) Perform insulation-resistance test of control wiring at 1000 VDC for one minute. Do not perform this test on wiring connected to solid-state components. Follow manufacturer's recommendations.
3) Perform the following pickup tests using primary injection:
   a) Verify relay does not operate at 90% of pickup setting.
   b) Verify pickup is less than 125% of setting or 1200 amp, whichever is smaller.
4) For summation type systems using phase-neutral current transformers, verify correct polarities by applying current to each phase-neutral current transformer pair. This test also applies to molded-case breakers using external neutral current transformer.
   a) Relay should operate when current direction is the same relative to polarity marks in the two current transformers.
   b) Relay should not operate when current direction is opposite relative to polarity marks in the two current transformers.
5) Measure time delay of the relay at 150% or greater of pickup.
6) Verify reduced voltage tripping capability: 55% for AC systems and 80% for DC systems.

c. Test Values:
1) System neutral-to-ground insulation shall be minimum of one megohm.
2) Insulation resistance values shall be in accordance with Table 1.
3) Relay timing shall be in accordance with manufacturer's specifications but must also be no longer than one second at 3000 amp.
4) Bus bolt-torque levels shall be in accordance with Table 12, unless otherwise specified by manufacturer.

9. Grounding Systems:
a. Visual and Mechanical Inspection:
1) Verify ground system is in compliance with drawings, specifications, and NFPA 70.
2) Inspect physical and mechanical condition.
3) Inspect anchorage.

b. Electrical Tests:
1) Perform fall-of-potential or alternative test in accordance with ANSI/IEEE 81 on the main grounding electrode or system.
2) Perform point-to-point tests to determine the resistance between the main grounding system and all major electrical equipment frames, system neutral, and/or derived neutral points.
3) Make resistance measurements in dry weather not earlier than 48 hours after rainfall.

c. Test Values:
1) The resistance between the main grounding electrode and ground should be no greater than five ohms. (Reference ANSI/IEEE 142.) Investigate any values above five ohms and notify Engineer immediately for further instructions.
2) Investigate point-to-point resistance values that exceed 0.5 ohm.

10. Thermographic Survey:
a. Visual and Mechanical Inspection:
1) Inspect physical, electrical, and mechanical conditions.
2) Remove all necessary covers prior to thermographic inspection.

3) Equipment to be inspected shall include all current-carrying devices. Provide report including the following:
   a) Discrepancies.
   b) Temperature difference between area of concern and reference area.
   c) Cause of temperature difference.
   d) Areas inspected. Identify inaccessible and unobservable areas and equipment.
   e) Identify load conditions at time of inspection.
   f) Provide photographs and thermogram of deficient area.

b. Test Parameters:
   1) Inspect distribution systems with imaging equipment capable of detecting minimum temperature difference of 1°C at 30°C.
   2) Equipment shall detect emitted radiation and convert detected radiation to visual signal.
   3) Thermographic surveys should be performed during periods of maximum possible loading but not less than 40% of rated load of the electrical equipment being inspected. Refer to NFPA 70B, Section 20.17 (Infrared Inspection).

c. Test Results:
   1) Temperature differences of 1°C to 3°C indicate possible deficiency and warrant investigation.
   2) Temperature differences of 4°C to 15°C indicate deficiency; repair as time permits.
   3) Temperature differences of 16°C and above indicate major deficiency; repair immediately.
   4) Suggested actions based on temperature rise can be found in Table 18.

B. Test Reports:
   1. Testing firm shall do the following:
      a. Prepare test report, including description of equipment tested, description of test, test results, conclusions and recommendations, retesting results, list of test equipment used and calibration date.
      b. Show test results in comparison to industry and manufacturer's values and tolerances.
      c. Interpret test results in writing and give recommendations for acceptance or rejection upon consultation with Engineer and prior to energizing equipment.
      d. Assure electrical equipment is operational and within industry and manufacturer's tolerances, and is installed in accordance with contract documents.
      e. Assure suitability of energization.
      f. Report to the Owner and Engineer any system, material, or workmanship that is found defective on the basis of acceptance tests.
      g. Retest equipment when required.
      h. Maintain written record of tests.
      i. Utilize safety practices during the tests in accordance with:
         1) Acceptable state and local safety operating procedures
         2) Owner's safety practices
         3) OSHA
         4) NFPA 70E

j. Perform tests with apparatus de-energized and grounded, except where otherwise specifically required ungrounded by test procedures.
k. Assemble and certify final test report.
l. Provide 4 copies of complete test report.
m. Attach label to all tested equipment with indication of date tested and testing firm name.

2. Contractor shall do the following:
   a. Investigate, replace, or repair any fault in material or in any part of the installation revealed by the tests.
   b. Deliver one copy of each test report directly to Engineer within 30 days after completion of testing, unless directed otherwise. Insert a copy of each test report in the equipment operation and maintenance manuals.

C. Test Equipment:
1. Test Instrument Calibration:
   a. Testing firm shall have calibration program that assures test instruments are maintained with rated accuracy.
   b. Instruments shall be calibrated in accordance with the following frequency schedule:
      1) Field instruments: Analog, 6 months maximum; Digital, 12 months maximum
      2) Laboratory instruments: 12 months
      3) Leased specialty equipment: 12 months where accuracy is guaranteed by lessor
   c. Dated calibration labels shall be visible on test equipment.
   d. Records, which show date and results of instruments calibrated or tested, must be kept up-to-date.
   e. Up-to-date instrument calibration instructions and procedures shall be maintained for test instrument.
   f. Equipment used for field testing shall be more accurate than instrument being tested.
   g. Calibrating standard applied to testing equipment shall be of higher accuracy than instrument tested.

**END OF SECTION**

## SECTION 26 0813 POWER DISTRIBUTION ACCEPTANCE TEST TABLES

**TABLE 1**
**Insulation Resistance Test Values**
**Electrical Apparatus And Systems**

| Voltage Rating | Minimum DC Test Voltage | Recommended Minimum Insulation Resistance In Megohms |
|---|---|---|
| 250 | 500 | 25 |
| 600 | 1,000 | 100 |
| 1,000 | 1,000 | 100 |
| 2,500 | 1,000 | 500 |
| 5,000 | 2,500 | 1,000 |
| 8,000 | 2,500 | 2,000 |
| 15,000 | 2,500 | 5,000 |
| 25,000 | 5,000 | 20,000 |
| 34,500 and above | 15,000 | 100,000 |

See Table 14 for temperature correction factors.

**TABLE 2**
**Switchgear Low-Frequency Withstand Test Voltages**

| Type of Switchgear | Rated kV | Maximum Test Voltage kV | |
|---|---|---|---|
| | | AC | DC |
| Low-Voltage Power Circuit Breaker Switchgear | .254 | 1.6 | 2.3 |
| | .508 | 1.6 | 2.3 |
| | .635 | 1.6 | 2.3 |
| MC (Metal-Clad Switchgear) | 4.76 | 14.0 | 20.0 |
| | 8.25 | 27.0 | 37.0 |
| | 15.0 | 27.0 | 37.0 |
| | 27.0 | 45.0 | + |
| | 38.0 | 60.0 | + |
| SC (Station-Type Cubicle Switchgear) | 15.5 | 37.0 | + |
| | 38.0 | 60.0 | + |
| | 72.5 | *120*.0 | + |
| MEI (Metal-Enclosed Interrupter Switchgear) | 4.76 | 14.0 | 20.0 |
| | 8.25 | 19.0 | 27.0 |
| | 15.0 | 27.0 | 37.0 |
| | 15.5 | 37.0 | 52.0 |
| | 25.8 | 45.0 | + |
| | 38.0 | 60.0 | + |

Derived from ANSI/IEEE C37.20.2-1993, Paragraph 5.5, *Metal-Clad and Station-Type Cubicle Switchgear* and C37.20.3-1993, Paragraph 5.5, *Metal-Enclosed Interrupter Switchgear*, and includes 0.75 multiplier with fraction rounded down.

The column headed “DC, Maximum Test Voltage kV” is given as a reference only for those using DC tests to verify the integrity of connected cable installations without disconnecting the cables from the switchgear. It represents values believed to be appropriate and approximately equivalent to the corresponding power frequency withstand test values specified for voltage rating of switchgear. The presence of this column in no way implies any requirement for a DC withstand test on AC equipment or that a DC withstand test represents an acceptable alternative to the low-frequency withstand tests specified in this specification, either for design tests, production tests, conformance tests, or field tests. When making DC tests, the voltage should be raised to the test value in discrete steps and held for a period of one minute.

Because of the variable voltage distribution encountered when making DC withstand tests, the manufacturer should be contacted for recommendations before applying DC withstand tests to the switchgear. Voltage transformers above 34.5kV should be disconnected when testing with DC. Refer to ANSI/IEEE C57-13-1993 (*IEEE Standard Requirements for Instrument Transformers*) paragraph 8.8.2.
+ Consult Manufacturer

**TABLE 3**
**Recommended Dissipation Factor/Power Factor at 20°C**
**Liquid Filled Transformers, Regulators, and Reactors**
**Acceptance Test Values**

| Oil, Silicone, and Less-Flammable Hydrocarbon Maximum Value (Percent) | |
|---|---|
| New Power Transformers and Reactors | 0.5% |
| New Distribution Transformers and Regulators | 1.0% |
| Remanufactured Power Transformers and Reactors | 1.0% |
| Remanufactured Distribution Transformers and Regulators | 1.5% |

**TABLE 4**
**Insulating Fluid Limits**

| **Table 4.1**<br>**Test Limits for New Insulating Oil Received in New Equipment** | | |
|---|---|---|
| **Mineral Oil** | | |
| **Test** | **ASTM Method** | **# 69 kV and Below** |
| Dielectric breakdown, kV minimum | D877 | 30 |
| Dielectric breakdown, kV minimum @ 1 mm(0.04”) gap | D1816 | 25 |
| Dielectric breakdown, kV minimum @ 2 mm(0.08”) gap | D1816 | 45 |
| Interfacial tension mN/m minimum | D971 or D2285 | 38 |
| Neutralization number, mg KOH/g maximum | D974 | 0.015 |
| Water content, (ppm) maximum | D1533 | 20 |
| Power factor at 25°C, % | D924 | 0.05 |
| Power factor at 100°C, % | D924 | 0.40 |
| Color | D1500 | 1.0 |
| Visual condition | D1524 | Bright and clear |

ANSI/IEEE C57.106-2002, *Guide for Acceptance and Maintenance of Insulating Oil in Equipment,* Tables 1, 2, and 3.

| **Table 4.2**<br>**Test Limits for Silicone Insulating Liquid in New Transformers** | | |
|---|---|---|
| **Test** | **ASTM Method** | **Acceptable Values** |
| Dielectric breakdown, kV minimum | D877 | 30 |
| Visual | D2129 | clear, free of particles |
| Water content, (ppm) maximum | D1533 | 50 |
| Dissipation/power factor, 60 Hz, % max. @ 25°C | D924 | 0.1 |
| Viscosity, cSt @ 25°C | D445 | 47.5 – 52.5 |
| Fire point, °C, minimum | D92 | 340 |
| Neutralization number, mg KOH/g max. | D974 | 0.01 |

ANSI/IEEE C57.111-1989 (R1995), *Guide for Acceptance of Silicone Insulating Fluid and Its Maintenance in Transformers,* Table 2.

**TABLE 4 (CONT.)**
**Insulating Fluid Limits**

**Table 4.3**
**Typical Values for Less-Flammable Hydrocarbon Insulating Liquid Received in New Equipment**

| ASTM Method | Test | Results | | |
|---|---|---|---|---|
| | | Minimum | | Maximum |
| D1816 | Dielectric breakdown voltage for 2 mm(0.08”) gap, kV | 40 | 34.5 kV class and below | --- |
| | | 60 | Desirable | |
| D1816 | Dielectric breakdown voltage for 1 mm(0.04”) gap, kV | 20 | 34.5 kV class and below | --- |
| | | 30 | Desirable | |
| D974 | Neutralization number, mg KOH/g | ---- | | 0.03 |
| D877 | Dielectric breakdown voltage kV | 30 | | ---- |
| D924 | AC loss characteristic (dissipation factor), %<br>25°C<br>100°C | <br>----<br>---- | | <br>0.1<br>1 |
| D1533B | Water content, (ppm) | ---- | | 25 |
| D1524 | Condition-visual | Clear | | |
| D92 | Flash point (°C) | 275 | | ---- |
| D92 | Fire point (°C) | 300[a] | | ---- |
| D971 | Interfacial tension, mN/m, 25°C | 38 | | ---- |
| D445 | Kinematic viscosity, $mm^2/s$. (cSt), 40°C | 1.0 X $10^2$(100) | | 1.3 X $10^2$(130) |
| D1500 | Color | ---- | | L2.5 |

ANSI/IEEE C57.121-1998, *IEEE Guide for Acceptance and Maintenance of Less-Flammable Hydrocarbon Fluid in Transformers,* Table 3.

The test limits shown in this table apply to less-flammable hydrocarbon fluids as a class. Specific typical values for each brand of fluid should be obtained from each fluid manufacturer.

a. If the purpose of the HMWH installation is to comply with the NFPA 70 *National Electrical Code*, this value is the minimum for compliance with NEC Article 450.23.

**TABLE 5**

**Transformer Insulation-Resistance**
**Acceptance Test Voltage and Minimum Results**

| Transformer Coil Rating Type in Volts | Minimum DC Test Voltage | Recommended Minimum Insulation Resistance in Megohms | |
|---|---|---|---|
| | | Liquid Filled | Dry |
| 0 - 600 | 1000 | 100 | 500 |
| 601 - 5000 | 2500 | 1000 | 5000 |
| 5001 - 15000 | 5000 | 5000 | 25000 |

See Table 14 for Temperature Correction Factors.

NOTE: Since insulation resistance depends on insulation rating (kV) and winding capacity (kVA), values obtained should be compared to manufacturer's test data.

**TABLE 6**
**Medium-Voltage Cables**
**Acceptance Test Values**

**Table 6.1**
**DC Test Voltages**

| Rated Voltage Phase-to-Phase kV | Conductor Sizes AWG or kcmil (mm) | Nominal Insulation Thickness mils (mm) | | Maximum DC Field Test Voltages, kV During/After Installation | |
|---|---|---|---|---|---|
| | | 100% Insulation Level | 133% Insulation Level | 100% Insulation Level | 133% Insulation Level |
| 5 | 8-1000 (8.4-507)<br>Above 1000 (507) | 90 (2.29)<br>140 (3.56) | 115 (2.92)<br>140 (3.56) | 28<br>28 | 36<br>36 |
| 8 | 6-1000 (13.3-507)<br>Above 1000 (507) | 115 (2.92)<br>175 (4.45) | 140 (3.56)<br>175 (4.45) | 36<br>36 | 44<br>44 |
| 15 | 2-1000 (33.6-507)<br>Above 1000 (507) | 175 (4.45)<br>220 (5.59) | 220 (5.59)<br>220 (5.59) | 56<br>56 | 64<br>64 |
| 25 | 1-2000 (42.4-1013) | 260 (6.60) | 320 (8.13) | 80 | 96 |
| 28 | 1-2000 (42.4-1013) | 280 (7.11) | 345 (8.76) | 84 | 100 |
| 35 | 1/0-2000 (53.5-1013) | 345 (8.76) | 420 (10.7) | 100 | 124 |

Tables derived from ANSI/ICEA S-93-639/NEMA WC 74-2000, *5-46 kV Shielded Power Cable for Use in the Transmission and Distribution of Electric Energy;* ANSI/ICEA S-94-649-2000, *Standard for Concentric Neutral Cables Rated 5,000 – 46,000 Volts*; ANSI/ICEA S-97-682-2000, *Standard for Utility Shielded Power Cables Rated 5,000 – 46,000 Volts*; and The Okonite Company, *High-Voltage Proof Testing.*

The DC field test voltages listed above are intended for cable designed in accordance with ICEA specifications. When older cables or other types/classes of cables or accessories are connected to the system, voltages lower than those shown may be necessary. Consult the manufacturers of the cables and/or accessories before applying the test voltage.

**TABLE 6 (CONT.)**
**Medium-Voltage Cables**
**Acceptance Test Values**

**Table 6.2**
**AC Test Voltages**

| Rated Voltage Phase-to-Phase kV | Conductor Sizes AWG or kcmil (mm) | Nominal Insulation Thickness mils (mm) | | AC Test Voltage, kV | |
|---|---|---|---|---|---|
| | | 100% Insulation Level | 133% Insulation Level | 100% Insulation Level | 133% Insulation Level |
| 5 KV | 8-1000<br>1001-3000 | 90 (2.29)<br>140 (3.56) | 115 (2.92)<br>140 (3.56) | 18<br>28 | 23<br>28 |
| 8 kV | 6-1000<br>1001-3000 | 115 (2.92)<br>175 (4.45) | 140 (3.56)<br>175 (4.45) | 23<br>35 | 28<br>35 |
| 15 kV | 2-1000<br>1001-3000 | 175 (4.45)<br>220 (5.59) | 220 (5.59)<br>220 (5.59) | 35<br>44 | 44<br>44 |
| 25 kV | 1-3000 | 260 (6.60) | 320 (8.13) | 52 | 64 |
| 28 kV | 1-3000 | 280 (7.11) | 345 (8.76) | 56 | 69 |
| 35 kV | 1/0-3000 | 345 (8.76) | 420 (10.7) | 69 | 84 |

Tables derived from ANSI/ICEA S-93-639/NEMA WC 74-2000, *5-46 kV Shielded Power Cable for Use in the Transmission and Distribution of Electric Energy;* ANSI/ICEA S-94-649-2000, *Standard for Concentric Neutral Cables Rated 5,000 – 46,000 Volts*; ANSI/ICEA S-97-682-2000, *Standard for Utility Shielded Power Cables Rated 5,000 – 46,000 Volts.*

All AC voltages are RMS values.

**TABLE 6 (CONT.)**
**Medium-Voltage Cables**
**Acceptance Test Values**

| Table 6.3<br>Partial Discharge Requirements<br>for Semiconducting Coating and Tape Designs Only | | |
|---|---|---|
| **Rated Circuit Voltage Phase-to-Phase Volts** | **Minimum Partial Discharge Extinction Level, kV** | |
| | **100% Insulation Level** | **133% Insulation Level** |
| 2001-5000 | 4 | 5 |
| 5001-8000 | 6 | 8 |
| 8001-15000 | 11 | 15 |

ANSI/ICEA S-93-639/NEMA WC 74-2000, *5-56 kV Shielded Power Cable for Use in the Transmission and Distribution of Electric Energy.*

| Table 6.4<br>Very Low Frequency Testing Levels<br>0.1 Hz Test Voltage (RMS) | |
|---|---|
| **System Voltage Phase-to-Phase (kV) (RMS)** | **Proof Phase-to-Ground (kV) (RMS)** |
| 5 | 10 |
| 15 | 22 |
| 25 | 33 |
| 35 | 47 |

**TABLE 7**
**Molded-Case Circuit Breakers**
**Values for Inverse Time Trip Test**

**(At 300% of Rated Continuous Current of Circuit Breaker)**

| Range of Rated Continuous Current Amperes | Maximum Trip Time in Seconds For Each Maximum Frame Rating[1] | |
|---|---|---|
| | 250V | 251 - 600V |
| 0-30 | 50 | 70 |
| 31-50 | 80 | 100 |
| 51-100 | 140 | 160 |
| 101-150 | 200 | 250 |
| 151-225 | 230 | 275 |
| 226-400 | 300 | 350 |
| 401-600 | ---------- | 450 |
| 601-800 | ---------- | 500 |
| 801-1000 | ---------- | 600 |
| 1001-1200 | ---------- | 700 |
| 1201-1600 | ---------- | 775 |
| 1601-2000 | ---------- | 800 |
| 2001-2500 | ---------- | 850 |
| 2501-5000 | ---------- | 900 |

Reproduction of Table 5-3 from NEMA Standard AB4-1996.

[1] For integrally-fused circuit breakers, trip times may be substantially longer if tested with the fuses replaced by solid links (shorting bars).

**TABLE 8**
**Instantaneous Trip Setting Tolerances for Field Testing**
**of Marked Adjustable Trip Circuit Breakers**

| | Tolerances of High and Low Settings | |
|---|---|---|
| **Ampere Rating** | **High** | **Low** |
| Adjustable | +40% | -30% |
| Non-adjustable | +25% | -25% |

Reproduction of Table 5-4 from NEMA publication AB4-1996.

For circuit breakers with nonadjustable instantaneous trips, tolerances apply to the manufacturer's published trip range, i.e., +40% on high side, -30% on low side.

**TABLE 9**
**Instrument Transformer Dielectric Tests**
**Field Acceptance**

| Nominal System (kV) | BIL (kV) | Applied Potential Tests Field Test Voltage (kV) | |
|---|---|---|---|
| | | AC | DC[1] |
| 0.6 | 10 | 3 | 4 |
| 1.2 | 30 | 7.5 | 10 |
| 2.4 | 45 | 11.25 | 15 |
| 5.0 | 60 | 14.25 | 19 |
| 8.7 | 75 | 19.5 | 26 |
| 15 | 95 | 25.5 | 34 |
| 15 | 110 | 25.5 | 34 |
| 25 | 125 | 30 | 40 |
| 25 | 150 | 37.5 | 50 |
| 34.5 | 150 | 37.5 | 50 |
| 34.5 | 200 | 52.5 | 70 |

Derived from Paragraph 8.8.2 and Tables 2 and 7 of ANSI/IEEE C57.13-1993 (Standard Requirements for Instrument Transformers).

[1] DC potential tests are not recommended for transformers rated higher than 200 kV BIL. DC tests may prove beneficial as a reference for future testing. In such cases the test direct voltage should not exceed the original factory test RMS alternating voltages.

**TABLE 10**
**Maximum Allowable Vibration Amplitude**

| RPM @ 60 Hz | Velocity in/s peak | Velocity mm/s | RPM @ 60 Hz | Velocity in/s peak | Velocity mm/s |
|---|---|---|---|---|---|
| 3600 | 0.15 | 3.8 | 3000 | 0.15 | 3.8 |
| 1800 | 0.15 | 3.8 | 1500 | 0.15 | 3.8 |
| 1200 | 0.15 | 3.8 | 1000 | 0.13 | 3.3 |
| 900 | 0.12 | 3.0 | 750 | 0.10 | 2.5 |
| 720 | 0.09 | 2.3 | 600 | 0.08 | 2.0 |
| 600 | 0.08 | 2.0 | 500 | 0.07 | 1.7 |

Derived from NEMA publication MG 1-1998, Section 7.8.1, Table 7-1. Table is unfiltered vibration limits for resiliently mounted machines. For machines with rigid mounting, multiply the limiting values by 0.8.

**TABLE 11**
**Overpotential Test Voltages for Electrical Apparatus Other than Inductive Equipment**

| Nominal System (Line) Voltage[1] (kV) | Insulation Class | AC Factory Test (kV) | Maximum Field Applied AC Test (kV) | Maximum Field Applied DC Test (kV) |
|---|---|---|---|---|
| 1.2 | 1.2 | 10 | 6.0 | 8.5 |
| 2.4 | 2.5 | 15 | 9.0 | 12.7 |
| 4.8 | 5.0 | 19 | 11.4 | 16.1 |
| 8.3 | 8.7 | 26 | 15.6 | 22.1 |
| 14.4 | 15.0 | 34 | 20.4 | 28.8 |
| 18.0 | 18.0 | 40 | 4.0 | 33.9 |
| 25.0 | 25.0 | 50 | 30.0 | 42.4 |
| 34.5 | 35.0 | 70 | 42.0 | 59.4 |
| 46.0 | 46.0 | 95 | 57.0 | 80.6 |
| 69.0 | 69.0 | 140 | 84.0 | 118.8 |

[1] Intermediate voltage ratings are placed in the next higher insulation class.

**TABLE 12**

**U.S. Standard**

**Bolt Torques for Bus Connections**
**Heat-Treated Steel – Cadmium or Zinc Plated**

| Grade | SAE 1 & 2 | SAE 5 | SAE 7 | SAE 8 |
|---|---|---|---|---|
| Minimum Tensile (psi) | 64K | 105K | 133K | 150K |
| Bolt Diameter In Inches | Torque (Foot Pounds) | | | |
| 1/4 | 4 | 6 | 8 | 8 |
| 5/16 | 7 | 11 | 15 | 18 |
| 3/8 | 12 | 20 | 27 | 30 |
| 7/16 | 19 | 32 | 44 | 48 |
| 1/2 | 30 | 48 | 68 | 74 |
| 9/16 | 42 | 70 | 96 | 105 |
| 5/8 | 59 | 96 | 135 | 145 |
| 3/4 | 96 | 160 | 225 | 235 |
| 7/8 | 150 | 240 | 350 | 380 |
| 1.0 | 225 | 370 | 530 | 570 |

**Bolt Torques for Bus Connections**
**Silicon Bronze Fasteners[1]**
**Torque (Foot Pounds)**

| Bolt Diameter in (Inches) | Nonlubricated | Lubricated |
|---|---|---|
| 5/16 | 15 | 10 |
| 3/8 | 20 | 14 |
| 1/2 | 40 | 25 |
| 5/8 | 55 | 40 |
| 3/4 | 70 | 60 |

[1] Bronze alloy bolts shall have a minimum tensile strength of 70,000 psi.

**TABLE 12 (CONT.)**

**Bolt Torques for Bus Connections**
**Aluminum Alloy Fasteners[2]**
**Torque (Foot Pounds)**

| Bolt Diameter in Inches | Lubricated |
|---|---|
| 5/16 | 8.0 |
| 3/8 | 11.2 |
| 1/2 | 20.0 |
| 5/8 | 32.0 |
| 3/4 | 48.0 |

[2] Aluminum alloy bolts shall have a minimum tensile strength of 55,000 psi.

**Bolt Torques for Bus Connections**
**Stainless Steel Fasteners[3]**
**Torque (Foot Pounds)**

| Bolt Diameter in Inches | Uncoated |
|---|---|
| 5/16 | 14 |
| 3/8 | 25 |
| 1/2 | 45 |
| 5/8 | 60 |
| 3/4 | 90 |

[3] Bolts, cap screws, nuts, flat washers, locknuts: 18-8 alloy.
Belleville washers: 302 alloy.

**TABLE 13**
**$SF_6$ Gas Tests**

| Test | Method | Serviceability Limits[a] |
|---|---|---|
| Moisture | Hygrometer | Per manufacturer or 200 ppm[b] |
| $SF_6$ decomposition byproducts | ASTM D 2685 | 500 ppm |
| Air | ASTM D 2685 | 5000 ppm[c] |
| Dielectric breakdown Hemispherical contents | 0.10" gap at atmospheric pressure | 11.5 – 13.5 kV[d] |

a. In the absence of consensus standards dealing with $SF_6$ gas tests, the NETA Standards Review Council suggests the above representative values.
b. According to some manufacturers.
c. Dominelli, N. and Wylie, L., *Analysis of $SF_6$ Gas as a Diagnostic Technique for GIS*, Electric Power Research Institute, Substation Equipment Diagnostics Conference IV, February 1996.
d. Per Even, F.E., and Mani, G. Sulfur Fluorides, Kirk, *Othmer Encyclopedia of Chemical Technology*, 4th ed., 11,428, 1994.

Reference: IEC 61634 High-Voltage Switchgear and Controlgear – *Use and Handling of Sulfur Hexafluoride ($SF_6$) in High-Voltage Switchgear and Controlgear.*

**TABLE 14**
**Insulation Resistance Conversion Factors For**
**Conversion of Test Temperature to 20°C**

| Temperature | | Multiplier | |
|---|---|---|---|
| **°C** | **°F** | **Apparatus Containing Immersed Oil Insulations** | **Apparatus Containing Solid Insulations** |
| 0 | 32 | 0.25 | 0.40 |
| 5 | 41 | 0.36 | 0.45 |
| 10 | 50 | 0.50 | 0.50 |
| 15 | 59 | 0.75 | 0.75 |
| 20 | 68 | 1.00 | 1.00 |
| 25 | 77 | 1.40 | 1.25 |
| 30 | 86 | 1.98 | 1.58 |
| 35 | 95 | 2.80 | 2.00 |
| 40 | 104 | 3.95 | 2.50 |
| 45 | 113 | 5.60 | 3.15 |
| 50 | 122 | 7.85 | 3.98 |
| 55 | 131 | 11.20 | 5.00 |
| 60 | 140 | 15.85 | 6.30 |
| 65 | 149 | 22.40 | 7.90 |
| 70 | 158 | 31.75 | 10.00 |
| 75 | 167 | 44.70 | 12.60 |
| 80 | 176 | 63.50 | 15.80 |

**TABLE 15 (not used)**
**High-Potential Test Voltage**
**Automatic Circuit Reclosers**

| Nominal Voltage Class, kV | Maximum Voltage, kV | Rated Impulse Withstand Voltage, kV | Maximum Field Test Voltage, kV, AC |
|---|---|---|---|
| 14.4 | 15.0 | 95 | 35 |
| 14.4 | 15.5 | 110 | 50 |
| 24.9 | 27.0 | 150 | 60 |
| 34.5 | 38.0 | 150 | 70 |
| 46.0 | 48.3 | 250 | 105 |
| 69.0 | 72.5 | 350 | 160 |

Derived from ANSI/IEEE C37.61-1973(R1992), *Standard Guide for the Application, Operation, and Maintenance of Automatic Circuit Reclosers* and from C37.60-1981(R1992), *Standard Requirements for Overhead, Pad-Mounted, Dry-Vault, and Submersible Automatic Circuit Reclosers and Fault Interrupters for AC Systems.*

**TABLE 16 (not used)**
**High-Potential Test Voltage**
**for Acceptance Test of Line Sectionalizers**

| Nominal Voltage Class, kV | Maximum Voltage, kV | Rated Impulse Withstand Voltage, kV | Maximum Field Test Voltage, kV, AC | DC 15 Minute Withstand (kV) |
|---|---|---|---|---|
| 14.4 (1 ∅) | 15.0 | 95 | 35 | 53 |
| 14.4 (1 ∅) | 15.0 | 125 | 42 | 53 |
| 14.4 (3 ∅) | 15.5 | 110 | 50 | 53 |
| 24.9 (1 ∅) | 27.0 | 125 | 60 | 78 |
| 34.5 (3 ∅) | 38.0 | 150 | 70 | 103 |

Derived from ANSI/IEEE C37.63-1984(R1990) Table 2 (*Standard Requirements for Overhead, Pad-Mounted, Dry-Vault, and Submersible Automatic Line Sectionalizers of AC Systems*).

NOTE: Values of AC voltage given are dry test one-minute factory test values.

**TABLE 17**
**Dielectric Withstand Test Voltages**
**Metal-Enclosed Bus**

| Type of Bus | Rated kV | Maximum Test Voltage, kV | |
|---|---|---|---|
| | | AC | DC |
| Isolated Phase for Generator Leads | 24.5 | 37.0 | 52.0 |
| | 29.5 | 45.0 | -- |
| | 34.5 | 60.0 | -- |
| Isolated Phase for Other than Generator Leads | 15.5 | 37.0 | 52.0 |
| | 25.8 | 45.0 | -- |
| | 38.0 | 60.0 | -- |
| Nonsegregated Phase | 0.635 | 1.6 | 2.3 |
| | 4.76 | 14.2 | 20.0 |
| | 15.0 | 27.0 | 37.0 |
| | 25.8 | 45.0 | 63.0 |
| | 38.0 | 60.0 | -- |
| Segregated Phase | 15.5 | 37.0 | 52.0 |
| | 25.8 | 45.0 | 63.0 |
| | 38.0 | 60.0 | -- |
| DC Bus Duct | 0.3 | 1.6 | 2.3 |
| | 0.8 | 2.7 | 3.9 |
| | 1.2 | 3.4 | 4.8 |
| | 1.6 | 4.0 | 5.7 |
| | 3.2 | 6.6 | 9.3 |

Derived from ANSI/IEEE C37.23-1987, Tables 3A, 3B, 3C, 3D, and paragraph 6.4.2. The table includes a 0.75 multiplier with fractions rounded down.

NOTE:

The presence of the column headed “DC” does not imply any requirement for a DC withstand test on AC equipment. This column is given as a reference only for those using DC tests and represents values believed to be appropriate and approximately equivalent to the corresponding power frequency withstand test values specified for each class of bus.

Direct current withstand tests are recommended for flexible bus to avoid the loss of insulation life that may result from the dielectric heating that occurs with rated frequency withstand testing.

Because of the variable voltage distribution encountered when making DC withstand tests and variances in leakage currents associated with various insulation systems, the manufacturer should be consulted for recommendations before applying DC withstand tests to this equipment.

**TABLE 18**
**Thermographic Survey**
**Suggested Actions Based on Temperature Rise**

| Temperature difference (TD) based on comparisons between similar components under similar loading | Temperature difference (TD) based upon comparisons between component and ambient air temperatures | Recommended action |
|---|---|---|
| 1°C to 3°C | 1°C to 10°C | Possible deficiency; warrants investigation |
| 4°C to 15°C | 11°C to 20°C | Indicates probably deficiency; repair as time permits |
| -- -- -- | 21°C to 40°C | Monitor until corrective measures can be accomplished |
| >15°C | >40°C | Major discrepancy; repair immediately |

Temperature specifications vary depending on the exact type of equipment. Even in the same class of equipment (i.e., cables) there are various temperature ratings. Heating is generally related to the square of the current; therefore, the load current will have a major impact on )T. In the absence of consensus standards for TD, the values in this table will provide reasonable guidelines.

An alternative method of evaluation is the standards-based temperature rating system as discussed in Chapter 8.9.2, Conducting an IR Thermographic Inspection, *Electrical Power Systems Maintenance and Testing*, by Paul Gill, PE, 1998.

It is a necessary and valid requirement that the person performing the electrical inspection be thoroughly trained and experienced concerning the apparatus and systems being evaluated as well as knowledgeable of thermographic methodology.

**TABLE 19**
**Overpotential Test Voltages**
**Electrical Apparatus Other than Inductive Equipment**

| Nominal System (Line) Voltage[a] (kV) | Insulation Class | AC Factory Test (kV) | Maximum Field Applied AC Test (kV) | Maximum Field Applied DC Test (kV) |
|---|---|---|---|---|
| 1.2 | 1.2 | 10 | 6.0 | 8.5 |
| 2.4 | 2.5 | 15 | 9.0 | 12.7 |
| 4.8 | 5.0 | 19 | 11.4 | 16.1 |
| 8.3 | 8.7 | 26 | 15.6 | 22.1 |
| 14.4 | 15.0 | 34 | 20.4 | 28.8 |
| 18.0 | 18.0 | 40 | 24.0 | 33.9 |
| 25.0 | 25.0 | 50 | 30.0 | 42.4 |
| 34.5 | 35.0 | 70 | 42.0 | 59.4 |

a. Intermediate voltage ratings are placed in the next higher insulation class.

**TABLE 20**
**Rated Control Voltages and their Ranges**
**for Circuit Breakers**

The maximum voltage is measured at the point of user connection to the circuit breaker [see Notes (9) (10)] with no operating current flowing, and the minimum voltage is measured with maximum operating current flowing.

| Rated Control Voltages and their Ranges for Circuit Breakers | | | | | |
|---|---|---|---|---|---|
| **RATED CONTROL VOLTAGE (8)** | **Direct Current Voltage Ranges (1)(2) Volts, DC** | | **OPENING FUNCTIONS ALL TYPES** | **RATED CONTROL VOLTAGE (60 Hz)** | **ALTERNATING CURRENT (1)(2)(3)(5) CLOSING, TRIPPING, AND AUXILIARY FUNCTIONS** |
| | **CLOSING AND AUXILIARY FUNCTIONS** | | | | |
| | **INDOOR CIRCUIT BREAKERS** | **OUTDOOR CIRCUIT BREAKERS** | | **SINGLE PHASE** | **SINGLE PHASE** |
| 24 | --- | --- | 14-28 | 120 | 104-127 (4) |
| 48 | 38-56 | 36-56 | 28-56 | 240 | 208-254 (4) |
| 125 | 100-140 | 90-140 | 70-140 | Polyphase | Polyphase |
| 250 | 200-280 | 180-280 | 140-280 | | |
| --- | --- | --- | --- | 208Y/120 | 180Y/104- |
| --- | --- | --- | --- | 240 | 220Y/127 |
| | | | | | 208-254 |

Derived from Table 8, ANSI C37.06-2000, *AC High-Voltage Circuit Breakers Rated on a Symmetrical Current Basis – Preferred Ratings and Related Required Capabilities.*

| **RATED CONTROL VOLTAGES AND THEIR RANGES FOR CIRCUIT BREAKERS Solenoid-Operated Devices** | |
|---|---|
| **RATED VOLTAGE** | **Closing Voltage Ranges for Power Supply** |
| 125 DC | 90 – 115 or 105 – 130 |
| 250 DC | 180 – 230 or 210 – 260 |
| 230 AC | 190 – 230 or 210 - 260 |

Notes:

(1) Electrically operated motors, contactors, solenoids, valves, and the like need not carry a nameplate voltage rating that corresponds to the control voltage rating shown in the table as long as these components perform the intended duty cycle (usually intermittent) in the voltage range specified.

(2) Relays, motors, or other auxiliary equipment that function as a part of the control for a device shall be subject to the voltage limits imposed by this standard, whether mounted at the device or at a remote location.

(3) Includes supply for pump or compressor motors. Note that rated voltages for motors and their operating ranges are covered by ANSI/NEA MG-1-1978.

(4) Includes heater circuits.

(5) Voltage ranges apply to all closing and auxiliary devices when cold. Breakers using standard auxiliary relays for control functions may not comply at lower extremes of voltage ranges when relay coils are hot, as after repeated or continuous operation.

(6) Direct current control voltage sources, such as those derived from rectified alternating current, may contain sufficient inherent ripple to modify the operation of control devices to the extent that they may not function over the entire specified voltage ranges.

(7) This table also applies for circuit breakers in gas-insulation substation installations.

(8) In cases where other operational ratings are a function of the specific control voltage applied, tests in C37.09 may refer to the "Rated Control Voltage." In these cases, tests shall be performed at the levels in this column.

(9) For an outdoor circuit breaker, the point of user connection to the circuit breaker is the secondary terminal block point at which the wires from the circuit breaker operating mechanism components are connected to the user's control circuit wiring.

(10) For an indoor circuit breaker, the point of user connection to the circuit breaker is either the secondary disconnecting contact (where the control power is connected from the stationary housing to the removable circuit breaker), or the terminal block point in the housing nearest to the secondary disconnecting contact.

(11) Some solenoid operating mechanisms are not capable of satisfactory performance over the range of voltage specified in the standard; moreover, two ranges of voltage may be required for such mechanisms to achieve an acceptable standard of performance.

(12) The preferred method of obtaining the double range of closing voltage is by use of tapped coils. Otherwise, it will be necessary to designate one of the two closing voltage ranges listed above as representing the condition existing at the device location due to battery or lead voltage drop or control power transformer regulation. Also, caution should be exercised to ensure that the maximum voltage of the range used is not exceeded.

**END OF SECTION**

# SECTION 26 1219 PAD-MOUNTED, LIQUID-FILLED, MEDIUM-VOLTAGE TRANSFORMERS

## PART 1 - GENERAL

### 1.1 RELATED WORK

A. Section 26 0000 - General Electrical Requirements

B. Section 26 0516 – Owner-Furnished Equipment

C. Section 26 0553 - Electrical Systems Identification

D. Section 26 0812 - Power Distribution Acceptance Tests

E. Section 26 0813 - Power Distribution Acceptance Test Tables

### 1.2 REFERENCE

A. Work under this Section is subject to requirements of Contract Documents including General Conditions, Supplementary Conditions, and sections under Division 01 General Requirements.

### 1.3 DESCRIPTION OF SYSTEM

A. Specification covers 3-phase, liquid-filled, compartmental type, pad-mounted transformers, including tap changers, and terminations.

### 1.4 REFERENCE STANDARDS

A. ANSI C57.12.22 Standard for Transformers - Pad-Mounted, Compartmental-Type, Self-Cooled, 3-Phase Distribution Transformers with High-Voltage Bushings, 2500 kVA and Smaller: High Voltage, 34,500Grd/19,920 V and Below; Low-Voltage, 480 V and Below - Requirements.

B. ANSI C57.12.28 Pad-Mounted Equipment - Enclosure Integrity.

C. DOE 10CFR 431 Energy Efficient Program for Certain Commercial and Industrial Equipment

D. IEEE C2 National Electrical Safety Code

E. IEEE C57.12.00 Standard General; Requirements for Liquid - Immersed Distribution, Power, and Regulating Transformers.

F. NEMA TR-1 Transformers, Regulators and Reactors

G. NFPA 70 National Electric Code (NEC)

H. UL 340 Tests for Comparative Flammability of Liquids.

### 1.5 SUBMITTALS

A. Review Owner-supplied shop drawings of Owner-furnished equipment to ascertain that necessary labor and materials have been provided to install equipment and complete the system it serves.

## PART 2 - PRODUCTS

### 2.1 (OWNER FURNISHED, NOT APPLICABLE TO THIS SECTION)

## PART 3 - EXECUTION

### 3.1 INSTALLATION

A. Installing contractor is responsible for a complete installation of transformer and all components as indicated in this section.

B. Install components as indicated and in accordance with manufacturer's instructions and recommendations.

C. Provide precast or cast-in-place concrete equipment pad with conduit openings. Size equipment pad 12” larger than transformer base in all directions. Chamfer pad top edge perimeter. Set pad level on compacted fill. Protect pad edges during site construction to prevent damage. Repair pad damage to the satisfaction of the Owner.

D. Grout conduit openings in pad to prevent varmint infiltration into transformer termination compartments.

E. Conduit stubs into pad are to be made with GRSC. Space conduits to allow access to conduit fittings and ground bushings. Bond grounding bushings to grounding lug in termination compartment.

F. Install transformer level and plumb.

G. Provide means for lifting complete transformer.

H. Bearing surfaces of lifting means shall be free from sharp edges.

I. Provide facilities for guying transformer.

J. Provide lifting means for untanking transformer.

K. Base shall permit rolling (or sliding) in directions of both center lines of transformer and provision shall be made for pulling transformer in these directions.

L. Locate jacking facilities near extreme ends of junction of base segments.

M. Jack ports or lugs shall be so designed that lifting members of jack can be inserted.

N. If liquid filling of any part of transformer is required at job site, supplier shall furnish liquid and job site supervision, and shall furnish or make available suitable filter press and vacuum pump.

O. Cable terminations are to be made per termination manufacturer’s directions. Bond arrestor ground connection and concentric shield compartment ground lug.

### 3.2 ACCEPTANCE TESTING

A. Testing by NETA Testing Agency. Installing contractor is responsible for engaging testing agency as part of this contract.

B. Acceptance testing to be performed in accordance with Section 26 0812 – Power Distribution Acceptance Tests and Section 26 0813 – Power Distribution Acceptance Test Tables.

## 3.3 WARRANTY

A. Equipment manufacturer warrants that all goods supplied are free of non-conformities in workmanship and materials for one year from date of initial operation.

**END OF SECTION**

# SECTION 26 2726 WIRING DEVICES

## PART 1 - GENERAL

### 1.1 RELATED WORK

A. Section 26 0526 - Grounding and Bonding for Electrical Systems

B. Section 26 0553 - Electrical Systems Identification

### 1.2 REFERENCE

A. Work under this Section is subject to requirements of Contract Documents including General Conditions, Supplementary Conditions, and sections under Division 01 General Requirements.

### 1.3 DESCRIPTION

A. Section includes receptacles, hazardous (classified) location receptacles and device cover plates.

### 1.4 REFERENCE STANDARDS

A. ASHRAE 90.1 – Energy Standard for Buildings Except Low-Rise Residential Buildings

B. IEEE C62.41.2 – Characterization of Surges in Low-Voltage (1000V and less) AC Power Circuits

C. IEEE C62.45 – Surge Testing for Equipment Connected to Low-Voltage (1000V and less) AC Power Circuits

D. NECA 1 – Good Workmanship in Electrical Contracting

E. NFPA 70 – National Electrical Code

F. NEMA WD-1 – General Color Requirements for Wiring Devices

G. NEMA WD-6 – Wiring Devices - Dimensional Requirements

H. NEMA 250 – Enclosures for Electrical Equipment (1000 Volts Maximum)

I. UL 498 – Attachment Plugs and Receptacles

J. UL 943 – Ground-Fault Circuit-Interrupters

K. UL 1310 – Class II Power Units

L. UL 1436 – Outlet Circuit Testers and Similar Indicating Devices

### 1.5 SUBMITTALS

A. Product Data: For each type of product indicated.

B. Shop Drawings: List of legends and description of materials and process used for premarking wall plates.

C. Manufacturer’s Installation Instructions:

1. Indicate application conditions and limitations of use stipulated by product testing agency. Include instructions for storage, handling, protection, examination, preparation, installation, and starting of product.

D. Test Reports: Indicate field test and inspection procedures and interpret test results and corrective action taken for compliance with specification requirements.

E. Closeout Submittals:
   1. Project Record Documents:
      a. Record actual locations and ratings of wiring devices.
   2. Operation and Maintenance Data:
      a. Include in manufacturers' packing label warnings and instruction manuals with labeling conditions.
      b. Include source and current prices of replacement parts and supplies.

## 1.6 QUALITY ASSURANCE

A. Obtain wiring devices from one source and by single manufacturer.

B. Regulatory Requirements:
   1. Comply with NFPA 70 for components and installation.
   2. Furnish products listed and classified by Underwriters Laboratories, Inc., as suitable for purpose specified and indicated.

## 1.7 DELIVERY, STORAGE, AND HANDLING

A. Store in clean, dry space. Maintain factory unopened packaging until ready for installation.

## 1.8 WARRANTY

A. Refer to Division 01 and Section 26 0000 – General Electrical Requirements for general warranty requirements.

B. Manufacturer shall provide standard 1 yr warranty against defects in materials and workmanship for products specified in this Section. Warranty period shall begin on date of substantial completion.

# PART 2 - PRODUCTS

## 2.1 MANUFACTURERS

A. Cooper Wiring Devices; a division of Cooper Industries, Inc.

B. Hubbell Incorporated; Wiring Device-Kellems

C. Pass & Seymour/Legrand; Wiring Devices & Accessories

## 2.2 RECEPTACLES

A. Comply with NEMA WD 1, NEMA WD 6 configuration 5-20R, and UL 498.

B. Receptacles: 125 V, 20A, heavy-duty (specification grade; side wired; flush mounted; straight blade; 2 pole, 3 wire grounding; thermoplastic body; duplex configuration unless otherwise noted.
   1. Ground Fault Circuit Interrupter (GFCI):
      a. Additional compliance with UL 943 Class A.

b. Leakage current trip level: 4 to 6 mA.
c. Trip time: .025 seconds nominal.
d. Feed-through type
e. Reverse line-load function to prevent GFCI from functioning if wired incorrectly.
f. Indicator Light: Lighted when device is tripped.

2. Isolated Ground (IG):
   a. Ground strap isolated from mounting strap.
   b. Ground screw connected directly to ground contacts.
3. USB Charging:
   a. UL-498 and UL-1310 listed
   b. Two USB 2.1 Amp or 3.0 Amp, 5VDC charging ports in addition to two 120V, 20A NEMA 5-20R outlets in one single gang device.
   c. LED indicator for notification of USB port connection.
   d. Auto-grounding connection type.
4. Tamper Resistant (TR):
   a. Requires insertion of object in both left and right contacts to energize.
   b. 2- or 3-prong plug.
5. Twist-locking:
   a. NEMA WD 6 configuration as indicated on drawings.
6. Switched: Upper half switched and lower half not switched.
7. Dedicated: Labeled “Dedicated.”
8. Special Purpose Receptacles: Specification grade, rated for voltage, amperage and NEMA configuration as noted on drawings.

## 2.3 DEVICE COVER PLATES

A. Single and combination types to match corresponding wiring devices:
   1. Attachment: Metal screws with head color to match plate finish.
   2. Material for Finished Spaces: satin-finished stainless steel.
   3. Material for Unfinished Spaces: Galvanized steel.
   4. Material for Damp Locations: Cast aluminum with while-in-use hinged cover, and listed and labeled for use in “wet locations.”

B. Weatherproof Cover Plates (Indoor Flush):
   1. Vertical Receptacles: Hubbell HBL5221 or approved equal.
   2. Horizontal Receptacles: Hubbell HBL5206WO or approved equal.

C. Weatherproof Cover Plates (Outdoor): NEMA 250, complying with type 3R weather-resistant, die-cast aluminum with weatherproof while-in-use hinged cover with tab for locking with padlock.

D. Tamper Resistant (TR):
   1. Slide cover over receptacle.

## 2.4 FINISHES

A. Color:
   1. Receptacle faceplates, and device cover plates: [<insert color>], except as follows:
      a. Receptacle faceplates connected to Emergency Power System: Red.

b. UPS Receptacles: Gray

## PART 3 - EXECUTION

### 3.1 COORDINATION

A. Special Purpose Receptacles: Coordinate final selections of NEMA configuration (locking, straight, blade, etc.) with configuration of plug on utilization equipment.

B. Receptacles for Owner-furnished equipment and equipment furnished under other divisions of specifications: Match plug configurations.

C. Coordination with Other Trades:

1. Take steps to insure that devices and their boxes are protected. Do not place wall finish materials over device boxes and do not cut holes for boxes with routers guided by riding against outside of the boxes.
2. Keep outlet boxes free of plaster, drywall joint compound, mortar, cement, concrete, dust, paint, and other material that may contaminate the raceway system, conductors, and cables.
3. Install device boxes in brick or block walls so that the device cover plate does not cross a joint
4. Install wiring devices after all wall preparation, excluding painting, is complete. Install device cover plates after painting is complete.

### 3.2 EXAMINATION

A. Verify location of wiring devices with architectural interior elevation drawings, prior to rough-in.

B. Verify outlet boxes are installed at proper height.

C. Verify wall openings are neatly cut and completely covered by wall plates.

D. Verify branch circuit wiring installation is completed, tested, and ready for connection to wiring devices.

### 3.3 PREPARATION

A. Clean debris from outlet boxes.

### 3.4 INSTALLATION

A. Comply with NECA 1, including the mounting heights listed in that standard, unless otherwise scheduled or indicated on drawings. Indicated dimensions are to center of device.

B. Conductors:

1. Do not strip insulation from conductors until just before they are spliced or terminated on devices.
2. Strip insulation evenly around the conductor using tools designed for the purpose. Avoid scoring or nicking of solid wire or cutting strands from stranded wire.
3. Length of free conductors at outlets for devices shall meet provisions of NFPA 70, Article 300, without pigtails.
4. Do not place bare stranded conductors directly under device screws. Use crimp on fork terminals for device terminations.

C. Device Installation:

1. Replace all devices that have been in temporary use during construction or show signs of installation prior to completion of building finishing operations.
2. Keep each wiring device in its package or otherwise protected until it is time to connect conductors.
3. Do not remove surface protection, such as plastic film and smudge covers, until last possible moment.
4. Connect devices to branch circuits using pigtails that are not less than 6” in length.
5. When there is a choice, use side wiring with binding-head screw terminals. Wrap solid conductor tightly clockwise, 2/3 to 3/4 of the way around terminal screw.
6. Use a torque screwdriver when a torque is recommended or required by the manufacturer.
7. When conductors larger than #10 AWG are installed on 20A circuits, splice #12 AWG pigtails for device connections.
8. Tighten unused terminal screws on the device.
9. When mounting into metal boxes, remove fiber or plastic washers used to hold device mounting screws in yokes, allowing metal-to-metal contact.
10. Install devices plumb, level with finished surfaces and free from blemishes.
11. Install devices above counters, 2” to the bottom of device above countertop or backsplash. Install all devices at same height above any one counter or fixed cabinet.
12. Install special purpose receptacles according to shop and rough-in drawings furnished by trade(s) producing such equipment. Verify locations prior to rough-in.
13. Install weatherproof GFCI receptacles:
    a. Within 25’-0” of roof-mounted mechanical equipment
    b. Outdoors
    c. As indicated on drawings
14. Connect wiring device grounding terminal to outlet box with bonding jumper and branch circuit equipment grounding conductor. Ground per requirements in Section 26 0526 – Grounding and Bonding for Electrical Systems.

D. Installation Orientations:
1. Install ground pin of vertically mounted receptacles up, and on horizontally mounted receptacles to the left.
2. Unless otherwise indicated or where space problem occurs, mount devices flush, with long dimension vertical.

E. Device Cover Plates: Do not use oversized or extra-deep plates. Repair wall finishes and remount outlet boxes when standard device plates do not fit flush or do not cover rough wall opening.

## 3.5 IDENTIFICATION

A. Comply with Section 26 0553 – Electrical Systems Identification.
1. Receptacles (20A, 120V): Use hot, stamped or engraved machine printing with black-filled lettering on white background on face of cover plate, and durable wire markers or tags inside outlet boxes. Indicate source panel identification and circuit number.
2. Receptacles (other than 20A,120V): Use hot, stamped or engraved machine printing with black-filled lettering on white background on face of cover plate, and durable wire markers or tags inside outlet boxes. Indicate source panel identification, circuit number, voltage, phase, and amperage.
3. Emergency Power Receptacles: In addition to above indicate “Emergency”.

4. Engrave cover plates on all Owner-furnished equipment and equipment furnished under other divisions of these specifications with source panel identification, circuit number (where applicable) as specified in this section.
5. Provide factory embossed or field-applied label to automatically switched receptacle face or cover plates to comply with ASHRAE 90.1 and NEC 406.3(E). Label is to include symbol indicated below. Use Hubbell CL60 label or equal for field applied labels.

   a. Switched receptacle symbol:

## 3.6 FIELD QUALITY CONTROL

A. Inspect wiring devices for defects.

B. Verify receptacle device is energized.

C. Perform tests and prepare test reports:
   1. Test receptacle devices for proper polarity:
      a. Test every receptacle with receptacle circuit tester. Tester shall test for open ground, reverse polarity, open hot, open neutral, hot and ground reversed, hot or neutral and hot open. Rewire receptacles with faults and retest.
   2. Test each GFCI receptacle device for proper operation:
      a. Perform testing using an instrument specifically designed and manufactured for testing ground-fault circuit interrupters. Apply the test to the receptacle. “TEST” button operation will not be acceptable as a substitute for this test. Replace receptacles that do not shut off power with 5/1000 A within 1/40 second and retest.
   3. Test Instruments: Use instruments that comply with UL 1436.
   4. Test Instrument for Convenience Receptacles: Digital wiring analyzer with digital readout or illuminated LED indicators of measurement.

D. Tests for Convenience Receptacles:
   1. Line Voltage: Acceptable range is 105 V to 132 V.
   2. USB Voltage: Acceptable range is 4.8VDC to 5.5VDC.
   3. Percent Voltage Drop under 15A Load: A value of 5% or higher is not acceptable.
   4. Ground Impedance: Values of up to 2 ohms are acceptable.
   5. GFCI Trip: Test for tripping values specified in UL 1436 and UL 943.
   6. Using the test plug, verify that the device and its outlet box are securely mounted.
   7. The tests shall be diagnostic, indicating damaged conductors, high resistance at the circuit breaker, poor connections, inadequate fault current path, defective devices, or similar problems. Correct circuit conditions, remove malfunctioning units and replace with new ones, and retest as specified above.

E. Operational Tests: Demonstrate the operation of each switch with the systems fully energized and operating. Each switch shall be demonstrated three times.

F. Interpret test results in writing and submit to Engineer.

## 3.7 ADJUSTING

A. Adjust devices and wall plates to be flush and level.

## 3.8 CLEANING

A. Remove excess plaster from interior of outlet boxes.

B. Clean devices and cover plates after painting is complete. Replace stained or improperly painted devices and cover plates.

**END OF SECTION**

# SECTION 26 2813 FUSES

## PART 1 - GENERAL

### 1.1 RELATED WORK

A. Section 26 2816 - Enclosed Switches and Circuit Breakers

B. Section 26 2913 - Enclosed Controllers

### 1.2 REFERENCE

A. Work under this Section is subject to requirements of Contract Documents including General Conditions, Supplementary Conditions, and section under Division 01 General Requirements.

### 1.3 DESCRIPTION

A. Section includes nonrenewable cartridge fuses, rated 600V and less, for use in low-voltage power distribution system and spare fuse cabinet.

### 1.4 REFERENCE STANDARDS

A. NEMA FU 1 - Low Voltage Cartridge Fuses

B. UL 248-1 - Low Voltage Fuses - Part 1: General Requirements

C. UL 248-4 - Low-Voltage Fuses - Part 4: Class CC Fuses

D. UL 248-5 - Low-Voltage Fuses - Part 5: Class G Fuses

E. UL 248-8 - Low-Voltage Fuses - Part 8: Class J Fuses

F. UL 248-10 - Low-Voltage Fuses - Part 10: Class L Fuses

G. UL 248-12 - Low-Voltage Fuses - Part 12: Class R Fuses

H. UL 248-15 - Low-Voltage Fuses - Part 15: Class T Fuses

I. UL 248-17 – Low-Voltage Fuses – Part 17: Class CF Fuses

J. UL 4248 - Fuseholders

### 1.5 SUBMITTALS

A. Product Data:
   1. Submit the following for each fuse type and size indicated:
      a. Manufacturer's technical data on features, performance, electrical characteristics, ratings, and dimensions.
      b. Time-current curves, selective coordination charts and tables, and related data.
      c. Let-through current curves for fuses with current-limiting characteristics.
      d. Fuse size for each elevator disconnect switch.

B. Closeout Submittals:
   1. Project Record Documents:
      a. Record actual class, size, and location of fuses.

## 1.6 QUALITY ASSURANCE

A. Obtain fuses from one source and by single manufacturer.

B. Comply with NFPA 70 for components and installation.

## 1.7 MAINTENANCE

A. Extra Materials:
   1. Furnish to the Owner a quantity of spare fuses equal to 10% of the total quantity of each fuse class and size installed, minimum of 3 of each fuse class and size.
   2. Furnish 2 fuse pullers for each size fuse.

# PART 2 - PRODUCTS

## 2.1 MANUFACTURERS

A. Eaton Cooper Bussmann

B. Mersen

C. Littelfuse

## 2.2 CARTRIDGE FUSES

A. NEMA FU 1, UL 248-1.

B. Characteristics: nonrenewable current-limiting cartridge fuse; current rating and class, as specified or indicated, and voltage rating consistent with circuit voltage.

C. Miscellaneous data:

| UL Standard | Class | Volts | Amperage | Interrupting Rating (Amp RMS Sym.) |
|---|---|---|---|---|
| 248-4 | CC | 600 | 0-30 | 200,000 |
| 248-5 | G | 600 | 0-20 | 100,000 |
| 248-5 | G | 480 | 25-60 | 100,000 |
| 248-8 | J | 600 | 0-600 | 200,000 |
| 248-10 | L | 600 | 601-6000 | 200,000 |
| 248-11 | Plug | 125 | 15-30 | 10,000 |
| 248-12 | RK1 | 250 or 600 | 0-600 | 200,000 |
| 248-12 | RK5 | 250 or 600 | 0-600 | 200,000 |
| 248-15 | T | 300 | 0-1200 | 200,000 |
| 248-15 | T | 600 | 0-800 | 200,000 |

| UL Standard | Class | Volts | Amperage | Interrupting Rating (Amp RMS Sym.) |
|---|---|---|---|---|
| 248-17 | CF | 600 | 1-100 | 200,000 |

**2.3 FUSEBLOCKS**

A. UL 4248

B. Thermoplastic base with UL flammability 94VO

C. Clip reinforcing springs – 100A and above

D. 200,000 A RMS Sym short-circuit current rating

E. Copper or aluminum connections

**2.4 FINGER SAFE FUSEHOLDERS**

A. UL 4248

B. Thermoplastic base with UL flammability 94VO

C. Cover over fuses

**PART 3 - EXECUTION**

**3.1 EXAMINATION**

A. Examine utilization equipment nameplates and installation instructions. Install fuses of sizes and with characteristics appropriate for each piece of equipment.

**3.2 INSTALLATION**

A. Verify proper fuse locations, sizes, and characteristics.

B. Install fuses in fusible devices specified in other sections at job site.

C. Arrange fuses so manufacturer, class, and size are readable without removing fuse.

D. Install typewritten labels on inside door of each fused device, indicating fuse replacement information.

**3.3 APPLICATION**

A. Main Service: Class L

B. Main Feeders: Class L, Class J, or Class RK1 as indicated by Engineer

C. Motor Branch Circuits: Class J or Class RK1, dual element time delay

D. Transformer Primary Protection: Class J or Class RK1 dual element time delay

E. Other Branch Circuits: Class J or Class RK1, fast acting, current limiting or as indicated by Engineer

F. Lighting and Appliance Panelboard 208/120V, 1A-100A branch circuits: Class CF, Class CC or Plug

G. Lighting and Appliance Panelboard 480/277V, 1A-100A branch circuits: Class CF or Class CC

## 3.4 CLEANING

A. Clean fuses and tighten connections prior to energizing of equipment.

**END OF SECTION**

# SECTION 26 2816 ENCLOSED SWITCHES AND CIRCUIT BREAKERS

## PART 1 - GENERAL

### 1.1 RELATED WORK

A. Section 26 0519 – Low-Voltage Electrical Power Conductors and Cables

B. Section 26 0526 – Grounding and Bonding for Electrical Systems

C. Section 26 0529 – Hangers and Supports for Electrical Systems

D. Section 26 0553 – Electrical Systems Identification

E. Section 26 0812 – Power Distribution Acceptance Tests

F. Section 26 0813 – Power Distribution Acceptance Test Tables

G. Section 26 2813 – Fuses

### 1.2 REFERENCE

A. Work under this Section is subject to requirements of Contract Documents including General Conditions, Supplementary Conditions, and sections under Division 01 General Requirements.

### 1.3 DESCRIPTION

A. Section includes fusible and non-fusible disconnect switches and circuit breakers in individual enclosures.

### 1.4 REFERENCE STANDARDS

A. ANSI//NECA 1 - Standard Practices for Good Workmanship in Electrical Contracting

B. NEMA AB 1 - Molded-Case Circuit Breakers, Molded-Case Switches, and Circuit Breakers Enclosures

C. NEMA KS 1 - Enclosed and Miscellaneous Distribution Equipment Switches (600 Volts Maximum)

D. NFPA 70 - National Electrical Code

E. UL 98 - Enclosed and Dead Front Switches

F. UL 486A - 468B - Wire Connectors

G. UL 489 - Molded-Case Circuit Breakers, Molded-Case Switches, and Circuit Breaker Enclosures

H. UL 869A - Reference Standard for Service Equipment

### 1.5 SUBMITTALS

A. Product Data:
   1. Submit catalog cut sheet indicating voltage, amperage, HP ratings, enclosure type, and dimension, fuse clip features, terminal lugs and all accessories including interlock devices, short circuit current ampere rating and factory settings of individual protective devices.

B. Manufacturer's Installation Instructions:
   1. Indicate application conditions and limitations of use stipulated by product testing agency. Include instructions for storage, handling, protection, examination, preparation, installation, and starting of product.

C. Test Reports:
   1. Indicate field test and inspection procedures and interpret test results and corrective action taken for compliance with specification requirements.

D. Closeout Submittals:
   1. Project Record Documents:
      a. Record actual locations of disconnect switches and ratings of installed fuses.
      b. Record actual locations and continuous current ratings of enclosed circuit breakers.
   2. Operation and Maintenance Data:
      a. Include manufacturer's recommended operating instructions, maintenance procedures and intervals, and preventive maintenance instructions.
      b. Include spare parts data listing, source, and current prices of replacement parts and supplies.

## 1.6 QUALITY ASSURANCE

A. Obtain disconnect switches and enclosed circuit breakers from one source and by single manufacturer.

B. Regulatory Requirements:
   1. Comply with NFPA 70 for components and installation.
   2. Furnish products listed and classified by Underwriters Laboratories, Inc., as suitable for purpose specified and indicated.

## 1.7 DELIVERY, STORAGE, AND HANDLING

A. Store in clean, dry space. Maintain factory wrapping or provide additional canvas or plastic cover to protect from dirt, water, construction debris, and traffic.

B. Comply with manufacturer's written instructions.

## 1.8 WARRANTY

A. Refer to Division 01 and Section 26 0000 – General Electrical Requirements for general warranty requirements.

B. Manufacturer shall provide standard 1 yr written warranty against defects in materials and workmanship for products specified in this Section. Warranty period shall begin on date of substantial completion.

# PART 2 - PRODUCTS

## 2.1 MANUFACTURERS

A. Square D

B. General Electric

C. Cutler-Hammer

D. Siemens

E. Erickson Electric Company

## 2.2 DISCONNECT SWITCHES

A. NEMA KS 1, UL 98

B. Load interrupter enclosed knife switch, heavy-duty type.

C. Fusible or non-fusible type as indicated.

D. Switch Interiors:
1. Switch blades that are visible in "OFF" position when switch door is open.
2. Plated current carrying parts.
3. Removable arc suppressors to permit easy access to line side lugs.

E. Switch Mechanism:
1. Quick-make, quick-break, with visible blades and externally operable handle.
2. Lockable only in “OFF” position and accept three industrial type, heavy-duty padlocks.
3. Dual cover interlock to prevent unauthorized opening of switch door when handle is in "ON" position, and to prevent closing of switch mechanism with door open.
4. Defeater mechanism to bypass interlock.
5. Operating handle integral part of enclosure.
6. Handle to physically indicate "ON" and "OFF" position.

F. Ratings:
1. Ampacity as indicated on drawings.
2. Minimum 10kA withstand rating for non-fusible switches
3. Minimum 100kA withstand rating for fusible switches
4. Horsepower rated.

G. Fusible Switches:
1. Rejection clips for Class R fuses specified.
2. Provisions for Class J or Class L fuses, as applicable.
3. Fuses: Per requirements in Section 26 2813 – Fuses.

## 2.3 ENCLOSED CIRCUIT BREAKERS

A. NEMA AB 1, UL 489.

B. Enclosed molded-case circuit breakers:
1. Tripped indication clearly shown on breaker handle taking position between “ON” and “OFF”.
2. 225A frame size and below: thermal-magnetic trip.
3. 250A frame size and above: electronic (solid-state microprocessor-based) trip units interchangeable in the field within the frame size and field-adjustable long time pick-up, long time delay, short time pick-up, short time delay, and instantaneous current settings. Each adjustment shall have discrete settings and shall be independent of other adjustments.

4. Locking tabs on cover to allow breaker handle to be locked in the open or closed position. When locked cover is not allowed to be removed.

C. Breaker Mechanism:
   1. Quick-make, quick-break.

D. Ratings:
   1. Ampacity as indicated on drawings.
   2. Listed as Type HACR for air conditioning equipment circuits.
   3. Listed as Type SWD for lighting circuits.
   4. Interrupting rating as indicated on drawings. Minimum ratings unless otherwise noted:
      a. 208/120V: 22kA
      b. 480/277V: 42kA

## 2.4 LUGS

A. Front removable lugs.

B. Labeled for 75°C copper and aluminum conductors.

C. Multiple lugs to match number of conductors per phase.

D. Termination of field installed conductors: Pressure wire connectors, except wire-binding screws for #10 AWG or smaller conductors.

## 2.5 ACCESSORIES:

A. Solid neutral assembly, where required.

B. Equipment ground kit.

C. One set of normally open (NO) auxiliary contacts, where disconnect switch is installed at a remote motor served by any type of motor controller including full and reduced voltage starters, solid state soft starters and variable frequency drives.

## 2.6 ENCLOSURES

A. NEMA KS 1, NEMA AB 1, UL 98, UL 489, as applicable.

B. NEMA Type 1 (dry indoor locations)
   1. Code-gauge galvanized steel
   2. Manufacturer’s standard gray enamel finish over prime coat

C. NEMA Type 3R (intermittently wet indoor or outdoor locations)
   1. Code-gauge galvanized steel
   2. Manufacturer’s standard gray enamel finish over prime coat

D. NEMA Type 4X (continuously wet or corrosive locations to include cooling towers)
   1. Code-gauge Type 316 stainless steel

E. Surface-mounted

2.7 SHORT CIRCUIT CURRENT RATING

A. Each circuit breaker shall have minimum short circuit current rating as indicated on drawings.

## PART 3 - EXECUTION

### 3.1 COORDINATION WITH MANUFACTURER

A. Instruct manufacturer about the location of incoming lugs, i.e., top or bottom feed based on incoming feeder entrance location.

B. Verify that “touch-up” paint kit is available for repainting.

C. Provide watertight bolt-on hubs for top entry NEMA-3R and NEMA-4X enclosures.

### 3.2 EXAMINATION

A. Examine areas and surface to receive disconnect switches and enclosed circuit breakers for compliance with requirements, installation tolerances, and other conditions affecting performance. Proceed with installation only after unsatisfactory conditions have been corrected.

B. Verify that space indicated for disconnect switches and enclosed circuit breakers mounting meets code-required working clearances.

C. Notify Architect/Engineer of any discrepancies prior to submittal of product data and shop drawings.

### 3.3 INSTALLATION

A. Install disconnect switches and/or enclosed circuit breakers in accordance with ANSI/NECA 1.

B. Install disconnect switches and/or enclosed circuit breakers level and plumb, in accordance with manufacturer’s written instruction.

C. Disconnect switches and enclosed circuit breakers mounting:

1. Fasten disconnect switches and enclosed circuit breakers firmly to walls and structural surfaces, ensuring they are permanently and mechanically anchored.
2. Anchor and fasten disconnect switches and enclosed circuit breakers and their supports to building structural elements (wood, concrete, masonry, hollow walls and nonstructural building surfaces) by the methods described in Section 26 0529 – Hangers and Supports for Electrical Systems.
3. Install two rows of steel slotted channel, with a minimum of four attachment points, for each disconnect switch and enclosed circuit breaker.
4. When not located directly on wall, install support frame of steel slotted channel anchored to floor and ceiling structure.

D. Do not support disconnect switches and/or enclosed circuit breakers by raceway.

E. Install top disconnect switch and/or enclosed circuit breaker handle a maximum of 6’-6” above finished floor.

F. Tighten electrical connectors and terminals according to equipment manufacturer's published torque-tightening values. Where manufacturer’s torque values are not indicated, use those specified in UL 486A - 486B.

G. Install engraved plastic nameplates under provisions of Section 26 0553 – Electrical Systems Identification. Attach nameplate to exterior of each switch and/or enclosed circuit breaker using small corrosion-resistant metal screws or rivets. Do not use contact adhesive.
   1. Include switch and/or enclosed circuit breaker name, amperage, voltage, phase, and number of wires.

H. Install fuses in fusible switches at job site per requirements in Section 26 2813 – Fuses.

## 3.4 CONNECTIONS

A. Ground equipment according to Section 26 0526 – Grounding and Bonding for Electrical Systems.

B. Connect wiring according to Section 26 0519 – Low-Voltage Electrical Power Conductors and Cables.

## 3.5 FIELD QUALITY CONTROL

A. Inspect for physical damage, proper alignment connections, anchorage, and grounding.

B. Correct malfunctioning units on-site and retest to demonstrate compliance. Remove and replace with new units and retest.

C. Test disconnect switches and/or enclosed circuit breakers per requirements in Sections 26 0812 – Power Distribution Acceptance Tests and 26 0813 – Power Distribution Acceptance Test Tables.

D. Interpret test results in writing and submit to Engineer.

## 3.6 REPAINTING

A. Remove paint splatters and other marks from surface of equipment.

B. Touch-up chips, scratches, or marred finishes to match original finish, using manufacturer-supplied paint kit. Leave remaining paint with Owner.

## 3.7 ADJUSTING

A. Circuit Breakers: Set field-adjustable trip settings or change the trip settings, as provided by Engineer.

## 3.8 CLEANING

A. Vacuum dirt and construction debris from interior and exterior of equipment; do not use compressed air to assist in cleaning.

**END OF SECTION**

# SECTION 26 2913 ENCLOSED CONTROLLERS

## PART 1 - GENERAL

### 1.1 RELATED WORK

A. Section 26 0519 – Low-Voltage Electrical Power Conductors and Cables

B. Section 26 0526 – Grounding and Bonding for Electrical Systems

C. Section 26 0529 – Hangers and Supports for Electrical Systems

D. Section 26 0533 – Raceway and Boxes for Electrical Systems

E. Section 26 0553 – Electrical Systems Identification

F. Section 26 0812 – Power Distribution Acceptance Tests

**G.** Section 26 0813 – Power Distribution Acceptance Test Tables

H. Section 26 2813 – Fuses

### 1.2 DESCRIPTION

A. Section includes enclosed manual and magnetic motor controllers and enclosed contactors.

B. Motors shown on the drawings or specified in other Divisions of these specifications shall be provided with motorized equipment and connected under this section. Provide motor controllers and power circuit disconnect devices for all motors, unless shown or specified to be furnished with motorized equipment under other Divisions of these specifications, and/or by others, for installation by this contract.

C. Variable-frequency controllers furnished by Division 20 for installation by Division 26.

D. Motor Voltage Information:
   1. Voltages available are: 120V single phase and 460 V, 3-phase. Circuits are designed for motors with voltage ratings as follows:
      a. Smaller than 1/2 hp motors: 115 V, single phase.
      b. 1/2 hp motors and larger: 460 V, 3-phase.

### 1.3 REFERENCE STANDARDS

A. ANSI/NECA 1 – Standard Practices for Good Workmanship in Electrical Contracting

B. NEMA AB 1 – Molded-Case Circuit Breakers, Molded-Case Switches, and Circuit Breakers Enclosures

C. NEMA 250 – Enclosures for Electrical Equipment (1000 V Maximum)

D. NEMA ICS 2 – Industrial Control and Systems: Controllers, Contactors and Overload Relays, Rated Not More Than 2000 VAC or 750 VDC

E. NEMA ICS 4 – Industrial Control and Systems: Terminal Blocks

F. NEMA ICS 5 – Industrial Control and Systems: Control Circuit and Pilot Devices

G. NEMA ICS 6 – Industrial Control and Systems: Enclosures

H. NEMA KS 1 – Enclosed and Miscellaneous Distribution Equipment Switches (600 V Maximum)

I. NEMA MG 1 – Motors and Generators

J. NFPA 70 – National Electrical Code

K. UL 98 – Enclosed and Dead Front Switches

L. UL 486A-486B – Wire Connectors

M. UL 489 – Molded-Case Circuit Breakers, Molded-Case Switches, and Circuit Breakers Enclosures

N. UL 508 – Industrial Control Equipment

## 1.4 SUBMITTALS

A. Product Data:
   1. Motor controllers: Submit catalog cut sheets showing voltage, size, rating and size of switching and overcurrent protective devices, dimensions, and enclosure details.
   2. Contactors: Submit catalog cut sheets showing voltage, size, current rating, dimensions, and enclosure details.
   3. Factory settings and time-current curves of individual protective devices.
   4. Confirm motor sizes and voltages with submittals of other Divisions of specifications, and/or by others, prior to Section submittals.

B. Manufacturer's Installation Instructions:
   1. Indicate application conditions and limitations of use stipulated by product testing agency. Include instructions for storage, handling, protection, examination, preparation, installation, and/or starting of product.

C. Test Reports: Indicate field test and inspection procedures and interpret test results and corrective action taken for compliance with specification requirements.

D. Closeout Submittals:
   1. Project Record Documents:
      a. Record actual locations and ratings of enclosed motor controllers and enclosed contactors.
   2. Operation and Maintenance Data:
      a. Include manufacturer's recommended operating instructions, maintenance procedures and intervals, and preventive maintenance instructions.
      b. Include spare parts data listing, source, and current prices of replacement parts and supplies.

## 1.5 QUALITY ASSURANCE

A. Obtain motor controllers, and contactors from one source and by single manufacturer.

B. Regulatory Requirements:
   1. Comply with NFPA 70 for components and installation.
   2. Furnish products listed and classified by Underwriters Laboratories, Inc., as suitable for purpose specified and indicated.

### 1.6 DELIVERY, STORAGE, AND HANDLING

A. Store in clean, dry space. Maintain factory wrapping or provide additional canvas or plastic cover to protect units from dirt, water, construction debris, and traffic.

### 1.7 WARRANTY

A. Refer to Division 01 and Section 26 0000 – General Electrical Requirements for general warranty requirements.

B. Manufacturer shall provide standard 1 yr warranty against defects in materials and workmanship for products specified in this Section. Warranty period shall begin on date of substantial completion.

### 1.8 MAINTENANCE

A. Extra Materials: Furnish extra materials described below that match product installed, are packaged with protective covering for storage, and are identified with labels describing contents.
   1. Spare pilot lights: Furnish 1 spare lamp for every 5 installed units, but not less than 1 set of 3 of each kind.
   2. Spare Fuses: Furnish 6 spare fuses for each size installed.

## PART 2 - PRODUCTS

### 2.1 MANUFACTURERS

A. Square D

B. General Electric

C. Cutler-Hammer

D. Siemens

E. Allen Bradley

### 2.2 MANUAL MOTOR CONTROLLERS

A. Description: NEMA ICS 2, AC general-purpose, Class A, manually operated, full-voltage controller for small motors, with bimetal type overload relay and pushbutton operator.

### 2.3 FULL-VOLTAGE NON-REVERSING MAGNETIC MOTOR CONTROLLERS

A. Description: NEMA ICS 2, AC general-purpose, Class A, magnetic controller for induction motors rated in horsepower, three-phase and single-phase, as scheduled, except where single-phase motors scheduled to be provided with built-in overload elements:
   1. Size 1 minimum
   2. Control Voltage: 24VAC, 60 Hz
   3. Overload Relays: NEMA ICS 2, solid-state:
      a. Solid-state type:
         1) Class 10, 20 selectable inverse-time tripping characteristics.
         2) Non-volatile operating memory.
         3) 3:1 current adjustment range.
         4) Phase loss/phase unbalance protection.

5) Ambient temperature insensitive.
6) Self-powered.
7) Manual reset. Automatic reset not acceptable.
8) Manual trip.
9) Visible trip indication.

4. Features:
   a. Auxiliary Contacts: NEMA ICS 2, 2 each field-convertible contacts in addition to seal-in contact.
   b. Red mushroom type E-Stop button
   c. Pilot Lights NEMA ICS 5: push-to-test LED incandescent or LED type. Red for running, green for off.
   d. Hand-Off-Auto (H-O-A) Selector Switches: Rotary type.
   e. Control Power Transformers: 120V secondary, adequate capacity to operate connected pilot, indicating and control devices, plus 100% spare capacity in each motor controller, but not less than 150VA. Fused primary and secondary, and unfused leg of secondary bonded to enclosure.
   f. Terminals: NEMA ICS 4.
   g. Other accessories detailed or required by drawings.

## 2.4 COMBINATION CONTROLLERS

A. Factory-assembled motor controllers with externally operable disconnect, fusible switch type, in common enclosure; means for locking disconnect handle and means for defeating cover interlock.
   1. Fusible Switch: NEMA KS 1 and UL 98; enclosed knife switch, heavy-duty type, external operable handle, clips or pads to accommodate specified fuses:
      a. Rejection clips for Class R fuses.
      b. Provisions for Class J type fuses.

## 2.5 MOTOR CONTROLLER ACCESSORIES

A. Factory installed devices in controller enclosure, unless otherwise indicated, as follows:
   1. 24 VAC control circuits and pilot light, unless noted otherwise.
   2. Red pilot light to indicate motor operation.
   3. Green pilot light to indicate motor stopped.
   4. Minimum wire size for control circuits: #14 AWG.
   5. Stop and Lockout Pushbutton Station: Momentary-break pushbutton station with a factory-applied hasp arranged so a padlock can be used to lock pushbutton in depressed position with control circuit open, where indicated.

B. Control services: As scheduled on motor schedule or indicated.

## 2.6 LUGS

A. Labeled for 75°C copper and aluminum conductors.

B. Multiple lugs to match number of conductors per phase.

C. Termination of field installed conductors: Pressure wire connectors, except wire-binding screws for #10 AWG or smaller conductors.

D. For equipment specified in this section and for equipment furnished under other Divisions of this specification and/or by others.

## 2.7 MOTOR CONTROLLERS AND CONTACTOR ENCLOSURES

A. NEMA 250, NEMA 1CS 6.

B. NEMA Type 1, Type 3R (outdoor locations) enclosure.

C. NEMA-4X for corrosive environments including cooling towers.

D. Code-gauge galvanized steel.

E. NEMA-4X enclosure is to be Type 316 Stainless Steel.

F. Manufacturer's standard gray enamel finish over prime coat.

G. Surface-mounted.

## 2.8 SOLID-STATE REDUCED-VOLTAGE CONTROLLERS

A. Description: NEMA ICS 2, suitable for use with standard NEMA MG 1, Design B, polyphase, induction motors.
   1. Power section consisting of 3 power modules, each with 2 thyristors connected in inverse parallel, and mounted on common, insulated base. Thyristors shall be connected in "six pulse" configuration.
   2. Electrical
      a. Input voltage: 480 Volts ±10%
      b. Input frequency: 60 Hz
      c. Output voltage: 40 to 100% of input
      d. Start (Voltage Ramp) time: 0.5 – 60 seconds
      e. Current (torque) control 100% - 500%
      f. Built-in overload protection: 30%-100% of rated current
      g. Shorted silicon-controlled rectifier detection
   3. Adjustable acceleration rate control (uses voltage or current ramp), and adjustable starting torque control (up to 500% current limitation for 20 seconds).
   4. Adjustable coast-to-stop lockout to restart (1-5 minutes)
   5. Rated for a minimum of 3 starts over a 24-hour period.
   6. Surge suppressor in solid-state power circuits to provide 3-phase protection against damage from supply voltage surges 10% or more above nominal line voltage.
   7. Multi-line LCD display to allow for field programming, system status indication, and fault code display.
   8. LED indicators to show motor and control status, including the following conditions:
      a. Control power available
      b. Controller on
      c. Overload trip
      d. Loss of phase
      e. General controller fault
   9. Service duty rated contactor that closes when directed by controller after full motor speed is applied (at end of starting ramp).

## PART 3 - EXECUTION

### 3.1 COORDINATION

A. Coordinate motor control wiring with Division 23 of these specifications.

B. Coordinate motor sizes and voltages with submittals of other Divisions of these specifications and/or by others.

C. Verify with manufacturer that “touch-up” paint kit is available for repainting.

### 3.2 EXAMINATION

A. Examine areas and surface to receive motor controllers and contactors for compliance with requirements, installation tolerances, and other conditions affecting performance. Proceed with installation only after unsatisfactory conditions have been corrected.

B. Verify that space indicated for motor controllers and contactors mounting meets code-required working clearances.

C. Notify Architect/Engineer of any discrepancies prior to submittal of product data.

### 3.3 INSTALLATION

A. Install motor controllers and contactors in accordance with ANSI/NECA 1.

B. Install level and plumb, in accordance with manufacturer’s written instruction.

C. Motor controllers and contactors mounting and seismic restraints:
   1. Install motor controllers and contactors anchorage devices and seismic restraints based on design by an Engineer registered and licensed in the State of Illinois and to comply with Section 26 0548 – Vibration and Seismic Controls for Electrical Systems for seismic criteria.
   2. Fasten motor controllers and contractors firmly to walls and structural surfaces, ensuring they are permanently and mechanically anchored.
   3. Anchor and fasten motor controllers and contactors and their supports to building structural elements (wood, concrete, masonry, hollow walls and nonstructural building surfaces) by the methods described in Section 26 0529 – Hangers and Supports for Electrical Systems.
   4. Install two rows of steel slotted channel, with minimum of four attachment points, for each motor controller and contactor.
   5. When not located directly on wall, install support frame of steel slotted channel anchored to floor and ceiling structure.
   6. Do not support motor controllers and contactors only by raceway.

D. Tighten electrical connectors and terminals according to equipment manufacturer’s published torque-tightening valves. Where manufacturer’s torque valves are not indicated, use those specified in UL 486A-486B.

E. Install engraved plastic nameplates under provisions of Section 26 0553 – Electrical Systems Identification. Attach nameplate to exterior of each motor controller and contactor, using small corrosion resistant metal screws or rivets. Do not use contact adhesive:
   1. Indicate motor served, nameplate horsepower, full load amperes, code letter, service factor, voltage/phase rating, and fuse size and type, when applicable.

F. Connect each motor terminal box to rigid conduit system with maximum 18" of flexible liquid-tight metal conduit. Install conduit per requirements in Section 26 0533 – Raceway and Boxes for Electrical Systems.

G. Check for proper rotation and phase relationship of each motor.

H. Install fuses in fusible switch at job site pre requirements in Section 26 2813 – Fuses.

I. Control Wiring Installation:
   1. Install wiring between motor control devices according to Section 26 0519 – Low-Voltage Electrical Power Conductors and Cables.
   2. Install motor control wiring in accordance with control wiring diagrams and in raceways where indicated or required by contract drawings.
   3. Bundle, train, and support wiring in enclosures.
   4. Connect hand-off-automatic switch and other automatic-control devices where applicable.
      a. Connect selector switches to bypass only manual- and automatic-control devices that have no safety functions when switch is in hand position.
      b. Connect selector switches with motor-control circuit in both hand and automatic positions for safety-type control devices such as low- and high-pressure cutouts, high-temperature cutouts, and motor overload protectors.

## 3.4 APPLICATION

A. Select features of each motor controller to coordinate with ratings and characteristics of supply circuit and motor; required control sequence; duty cycle of motor, and configuration of pilot device and control circuit affecting controller functions.

## 3.5 CONNECTIONS

A. Provide green wire ground through flexible conduit to interconnect motor frame and rigid conduit system.

B. Ground and bond motor controller and contactor enclosures according to Section 26 0526 – Grounding and Bonding for Electrical Systems.

C. Connect power and control wiring according to Section 26 0519 – Low-Voltage Electrical Power Conductors and Cables.

D. Connect control wiring for operation, control and supervision of motorized equipment as shown on drawings and/or specified in this and other Divisions of these specifications.

## 3.6 FIELD QUALITY CONTROL

A. Inspect motor controllers and contactors for physical damage, proper alignment, connections, anchorage, seismic restraints and grounding.

B. Correct malfunctioning motor controllers and contactors on-site and retest to demonstrate compliance. Remove and replace with new units and retest.

C. Test continuity of each circuit.

D. Test motor controllers per requirements in Sections 26 0812 – Power Distribution Acceptance Tests and 26 0813 – Power Distribution Acceptance Test Tables.

E. Interpret test results in writing and submit to Engineer.

## 3.7 REPAINTING

A. Remove paint splatters and other marks from surface of equipment.

B. Touch-up chips, scratches or marred finishes to match original finish, using manufacturer-supplied paint kit. Leave remaining paint with Owner.

## 3.8 ADJUSTING

A. Set field-adjustable circuit breakers trip settings or change the trip settings as indicated on drawings.

B. Adjust motor circuit protectors.

## 3.9 CLEANING

A. Vacuum dirt and construction debris from interior and exterior of equipment; do not use compressed air to assist in cleaning.

**END OF SECTION**

**SECTION 26 5100 LIGHTING SYSTEMS**

## PART 1 - GENERAL

### 1.1 RELATED WORK

A. Section 26 0000 - General Electrical Requirements

B. Section 26 0519 - Low-Voltage Electrical Power Conductors and Cables

C. Section 26 0526 - Grounding and Bonding for Electrical Systems

D. Section 26 0533 - Raceway and Boxes for Electrical Systems

E. Section 26 0923 - Lighting Control Devices

### 1.2 REFERENCE

A. Work under this Section is subject to requirements of Contract Documents including General Conditions, Supplementary Conditions, and sections under Division 01 General Requirements.

### 1.3 DESCRIPTION OF WORK

A. Provide luminaires as shown on Contract Drawing and Specifications.

B. Luminaires shall be provided complete with necessary accessories for proper installation.

C. Catalog numbers shown in luminaire schedule are basic luminaire types. Additional features, accessories and options specified or scheduled shall be included.

D. Provide lamps for luminaires as recommended by luminaire manufacturer and as scheduled.

E. Specifications and drawings convey the features, and functions of luminaires only and do not show every item or detail necessary for the work.

F. Work includes final aiming and focusing of luminaires under direction of the Architect/Engineer.

### 1.4 REFERENCE STANDARDS

A. NECA/IESNA 500 - Recommended Practice for Installing Indoor Commercial Lighting Systems (ANSI)

B. NECA/IESNA 501 - Recommended Practice for Installing Exterior Lighting Systems (ANSI)

C. NECD/IESNA 502 - Recommended Practice for Installing Industrial Lighting Systems (ANSI)

D. NEMA LE 4 - Recessed Luminaires, Ceiling Compatibility

E. UL 57 - Electrical Luminaires

F. UL 496 - Lampholders

G. UL 773 - Plug-in Photocontrols for use with area lighting

H. UL 924 - Emergency Lighting and Power Equipment

I. UL 935 - Fluorescent Lamp Ballasts

J. UL 1029 - High Intensity Discharge Lamp Ballast

K. UL 1570 - Fluorescent Luminaire

L. UL 1571 - Incandescent Luminaire

M. UL 1572 - High Intensity Discharge Luminaire

N. UL 1598 - Luminaires

## 1.5 QUALITY ASSURANCE

A. Luminaire and accessory components shall be constructed of materials appropriate for their use.

B. Luminaires, ballasts, lamps and other components shall meet the requirements of all applicable State and Municipal energy codes.

C. Provide luminaires listed and labeled for their indicated use and installation conditions.

D. Contractor shall coordinate installation of lighting systems with all trades.
   1. Manufacturers listed in the luminaire schedule shall be assumed capable of supplying listed luminaires. Any such exceptions shall immediately be brought to the attention of Architect and Lighting Consultant. Multiple Name Specification:
      a. When multiple manufacturers are listed, Electrical Contractor shall choose which of the listed products are to be provided.
      b. Products of the same type shall be of same manufacturer.
   2. Single Name Specification:
      a. When only one product is suitable for the application and/or no other known acceptable products exist, only one manufacturer/product is listed in the Luminaire Schedule. For such instances, Electrical Contractor shall provide the listed product with no exceptions.
      b. Specifier has secured accurate pricing for all single name products prior to bidding and has shared this information with Architect/Owner's Representative. Contractor shall supply contractor net unit pricing for all single name products specified. Unit price shall be for equipment only and not include installation or miscellaneous electrical costs.

E. Substitution requests:
   1. Will be evaluated prior to Bid.
   2. Shall follow procedures set forth in this Section and in Section 01 2500 - Substitution Procedures.
   3. Shall be made not less than 14 days prior to bid date.
   4. Shall include the following information:
      a. Specified and proposed manufacturer's product data sheet, noting options and features.
      b. Provide dimensioned drawing of luminaire.
      c. Provide photometric data in form of an electronic IES file.
   5. Provide table-top samples and/or mockup of specified luminaire and proposed alternate.
   6. Samples shall:
      a. Be fully operable, complete with specified lamp(s) and ready for installation.
      b. Remain available during construction.

7. Electrical Contractor shall be responsible for all costs incurred by substitution request sample and/or mockup production and review.
8. Equipment delivery lead time shall not be held as a valid reason for requesting luminaire substitution unless luminaire lead time from specified manufacturer is in excess of 14 weeks. It shall be the sole responsibility of the Electrical Contractor to determine necessary equipment lead times, deliver submittals for review in a timely fashion, and place orders accordingly to ensure timely delivery.
9. When requesting a substitution, Electrical Contractor shall provide unit and extended pricing for specified luminaire, unit and extended pricing for proposed alternate, and unit and extended delta savings to owner to be realized by accepting proposed alternate. If requested, provide unit pricing for each luminaire type specified to provide a baseline comparison for substitution request.
10. Electrical Contractor shall guarantee pricing on all luminaire types for which a substitution request has been granted. This price guarantee shall be per unit and shall be maintained through the end of construction, regardless of quantity purchased.

## 1.6 SUBMITTALS

A. As soon as possible after award of Contract, submit complete list of lighting products to be furnished, with manufacturer and catalog designations, including currently quoted lead times for product delivery. Should Electrical Contractor anticipate delivery schedule of any specified product may adversely impact construction schedule, he shall bring it to the attention of the Owner at this time.

B. In addition to complying with requirements of Section 26 0000 - General Electrical Requirements, submittals shall include the following:
   1. Manufacturer's product data
   2. Installation instructions
   3. Maintenance data
   4. Parts list for each luminaire accessories
   5. Photometric Data: photometric data for luminaire, including optical performance as follows:
      a. Coefficients of utilization
      b. Luminance table
      c. Candela distribution data
      d. Zonal lumens
      e. Area and roadway luminaires shall include Isocandela Charts and IES Roadway Distribution Classification.
   6. Ballast schedule indicating manufacturer, type, and catalog number for each luminaire
   7. Ballast cut sheet for each ballast used, referencing luminaire type(s)
   8. Lamp schedule indicating manufacturer, type, and catalog number for each luminaire
   9. Lamp cut sheet for each lamp used, referencing luminaire type(s)
   10. Documentation of lamp and ballast compatibility
   11. Product color/finish
      a. Where specific finish or color is not specified and options exist, submit color or finish samples to Architect/Engineer for selection.

C. Shop Drawings for equipment provided under this Section shall include the following:
   1. Detailed drawings of linear and suspended luminaires including dimensions, support spacing, suspension type, power feed type and locations, lamp combinations, ballast locations, luminaire joint locations and end plates.

2. Detailed drawings for each cove and linear wall system configuration including dimensions, power feed locations, ballast locations, luminaire joint locations, extension plates for end and corner sections and end plates.
3. For fluorescent strip luminaires mounted in architectural coves, provide dimensioned drawings and sections and include louver/lens cut sheet.
4. Detailed drawings for nonstandard luminaires indicating dimensions, weights, method of field assembly, components, features, and accessories. Details shall be scaled at not less than half full size.
5. Photometric Data: Where indicated on luminaire schedule and Contract Drawings, supply complete photometric data for luminaire, including optical performance rendered by independent testing laboratory developed according to methods of the Illuminating Engineering Society of North America as follows:
    a. Coefficients of utilization
    b. Luminance table with data presented numerically, showing maximum luminaire luminance at shielding angles. Readings should be taken both crosswise and lengthwise in case of fluorescent luminaire or luminaire with an asymmetric distribution.
    c. Candela distribution data, presented graphically and numerically, in 5° increments (5°, 10°, 15°, etc.) Data developed for up and down quadrants normal, parallel, and at 11-1/2°, 45°, 67-1/2° to lamps if light output is asymmetric.
    d. Zonal lumens stated numerically in 10° increments (5°, 15°, etc.) as above.

D. Catalogue Cuts lacking sufficient detail will not be accepted.

E. No variation from the general arrangement and details indicated on drawings shall be made on shop drawings unless required by actual conditions. All variations shall be marked on drawings submitted for approval.

## PART 2 - PRODUCTS

### 2.1 ACCEPTABLE MANUFACTURERS

A. Luminaires:
    1. As shown on Luminaire Schedule

B. Electronic Fluorescent Ballasts:
    1. As shown on Luminaire Schedule

C. Lamps:
    1. As shown on Luminaire Schedule

### 2.2 FABRICATION AND MANUFACTURER

A. Luminaires:
    1. Construction
        a. Luminaires shall bear label indicating circuit voltage. Labels shall not be visible from normal viewing angles.
        b. Luminaires shall be constructed with joints made by means of welded, brazed, screwed, or bolted construction methods.
        c. Housings shall be so constructed that all electrical components are accessible and replaceable without removing luminaires from their mountings.
        d. Surface temperatures of luminaires with ballasts shall not exceed 90°C in 30°C ambient.

e. Luminaires recessed in ceilings utilized as air handling plenums shall be certified as suitable for the purpose.
f. Miter cuts shall be accurate, joints shall be flush and without burrs.
g. Fluorescent troffers with doors shall have spring-loaded door cam latches.
h. Provide inscription for exit and stairway signs to conform to applicable codes.

2. Lenses, Reflectors and Diffusers
   a. All lenses or louvers shall be removable, but held so that normal motion will not cause them to drop out.
   b. Optical lenses shall be free from spherical and chromatic aberrations.
   c. Acrylic lenses shall be 100% virgin acrylic material.
   d. Fluorescent troffer lenses shall be 0.125” thick, unless otherwise noted.
   e. Alzak reflectors and louvers shall be low iridescent equivalent to Coil Anodizers. All alzak parabolic cones shall be guaranteed against discoloration for a minimum of ten years.
   f. Fluorescent luminaires installed without glass, acrylic or metal enclosure, shall be equipped with safety type lampholders.
3. Optics and Adjustments
   a. Lamp sockets shall be suitable for the indicated lamps and shall be set such that lamps are positioned in optically correct relation to all luminaire components.
   b. Spread Lens Luminaire: Luminaires with spread lens shall contain lens orientation locking devices to insure that lens orientation is not disturbed during future lamp replacement or cleaning.
   c. Oval Beam Luminaire: Luminaires with oval shape beam pattern lamps shall contain lamp orientation locking devices to insure that beam orientation is not disturbed during lamp replacement or cleaning.
   d. Adjustable Angle Luminaire: Luminaires with adjustment beam angle shall contain reliable angle locking devices.
4. Finishes
   a. Provide luminaires with finish as shown in the luminaire schedule. Verify final finish requirements before releasing luminaires for fabrication.
   b. Painted luminaires shall be painted after fabrication or "post painted".
   c. Ferrous parts and supports shall be rust proofed after fabrication.
5. Wiring
   a. Luminaires shall be completely wired at the factory.
   b. Internal wiring shall contain no splices.
   c. Connections shall be made with insulated "wire nut" type mechanical connectors.
   d. Wire for connections to lamp sockets and lamp auxiliaries shall be minimum #16 ga luminaire wire.
   e. Luminaires shall be provided with flexible conduit, pigtails, and equipment for external connections.
   f. Recessed incandescent luminaires shall incorporate integral thermal protection.
   g. Incandescent luminaires shall be wired with heat resistant wire.
   h. Recessed luminaires installed in inaccessible ceilings shall be UL listed for through wiring with the junction box accessible from the luminaire opening.
   i. Provide dual-level switching for luminaires as indicated on luminaire schedule and where shown on Contract Drawings. Typically first switch designation controls outboard lamps, and second switch designation controls inboard lamp(s), unless noted otherwise.
   j. Provide lamps for all luminaires.

6. Support:
    a. Rigid metallic pipe stems shall be utilized for the support of pendant mounted luminaires, unless otherwise noted.
    b. Stem hangers shall be equipped with aligner box covers or canopies so that stems hang vertically, irrespective of the angle of the surface they are mounted from.
    c. Wherever a luminaire or its hanger canopy is attached to a surface mounted outlet box, a finishing ring shall conceal the outlet box.
    d. Yokes, brackets and supplementary supporting members needed to mount luminaires to suitable ceiling members shall be furnished and installed by Contractor. Verify mounting hardware required prior to installation.
7. Framing
    a. Verify type of ceiling construction prior to releasing luminaires for fabrication and delivery.
    b. Provide mounting appurtenance, flanges, sloped ceiling adaptors where required.
    c. Provide mounting assembly, clips or other mechanical mounting lugs as required for support of luminaires.
    d. Light leaks between ceiling trim of recessed luminaires and ceilings are not allowed.
    e. Ceiling opening frames shall be manufactured of non ferrous metal or be suitably rust proofed after fabrication.
    f. Ceiling opening frames for recessed luminaires shall be furnished by Electrical Contractor and installed by General Contractor.
8. All castings and extrusions shall be given mimimum one coat of baked-on clear lacquer, unless painted finish is specified.
9. Aluminum surfaces shall receive a duronodic or polyester powder paint finish.
10. Cast-in Luminaire housings installed directly in concrete shall be fabricated of hot dip galvanized steel or cast aluminum or composite.
    a. Where cast aluminum housings are used, give two coats of asphaltum paint prior to installation.
    b. Provide solid neoprene grommets at each point light luminaire surfaces are mounted to concrete structure.
11. Outdoor Lighting Systems:
    a. Exterior Luminaires:
        1). Shall operate at a minimum ambient temperature of -20°F.
        2). Fully gasketed, with UL wet location label
        3). Provide approved wire mesh screens for ventilation openings.
        4). Anodized aluminum reflectors shall have minimum of 0.02 mm anodizing thickness.]

**2.3** BALLASTS

A. Ballasts shall be equipped with line fuses.
    1. Fuses shall be type and size recommended by luminaire manufacturer.

B. Ballasts shall be suitable for operating the indicated lamps.

C. Ballast supply wiring is to include disconnecting means to remove energized ballast from circuit without exposing live conductors.

D. Ballasts shall be located in luminaire they serve, unless otherwise noted.

E. Electronic Fluorescent Ballasts:

1. Compact fluorescent lamps, above 13 Watts, use only electronic programmed rapid start ballasts.
2. Linear fluorescent lamps, T8 and T5 type, shall use programmed rapid start electronic ballasts.
3. Multi-lamp programmed rapid start ballasts shall be of the series sequence type.
4. Ballasts shall be:
    a. ETL Certified, CBM and UL Listed, and meet or exceed NEMA and ANSI Standards.
    b. Class P thermally protected
    c. Class A sound rated
    d. Operate lamps as scheduled
    e. Maintain constant light output over entire operating voltage range.
    f. Operate lamps at frequency of 40 kHz or higher with less than 2% flicker.
    g. Meet or exceed EMI and RFI limits set by FCC (Part 18).
    h. Maintain the following performance:
        1). Lamp Current Crest Factor ≤ 1.6
        2). Total Harmonic Distortion ≤ 10%
        3). Third Harmonic Distortion ≤ 10%
        4). Power factor ≥ 0.90
    i. Equipped with a cut-off circuit that senses over-voltage condition to lamp for end-of-life protection.
    j. Ballast case temperature shall not exceed 25°C temperature rise over 40°C ambient.
    k. Be equipped with a cut-off circuit that senses an over-voltage condition to lamp for end-of-life protection for all lamps smaller than one inch in diameter (all T2, T4 and T5 lamps).
    l. Provide one ballast for every two lamps.
    m. Ballast/lamp combination is to allow for ballast factor of .90 or better.

**2.4** LAMPS

A. Provide lamps as noted on Luminaire Schedule.

B. Provide lamps of same type from same manufacturer.

C. Where a specific lamp manufacturer has been indicated in the Luminaire Schedule, lamps shall be supplied from named manufacturer only.

D. Linear fluorescent lamps shall be:
    1. Rapid start
    2. Triphosphor
    3. Minimum CRI of 80
    4. Color temperature as noted on Luminaire Schedule or 3500K if not specified.

E. Provide all other lamp types and special purpose lamps as noted on Luminaire Schedule.

## PART 3 - EXECUTION

### 3.1 INSTALLATION

A. Marking:
   1. Voltage identification: Luminaires designed for voltages other than 110-125 volt circuits shall be clearly marked with rated voltage.
   2. Lamp/ballast coordination: Luminaires equipped with ballast for operation of rapid start lamps shall be plainly marked "Use Rapid Start Lamps Only". Similarly, luminaires equipped with ballasts or other components requiring use of specific types of lamps shall be plainly marked.
   3. Markings must be clear and shall be located to be readily visible to service personnel but invisible from normal viewing angles when lamps are in place.

B. Installation of Luminaires:
   1. Lamps, glassware, reflectors and refractors shall be clean and free of chips, cracks and scratches.
   2. Install decorative luminaires, reflector cones, baffles, aperture plates, lenses, trims, and decorative elements of recessed luminaires after completion of ceiling tile, plastering, painting, and general cleanup is completed. Where luminaire location or construction does not permit sequential installation, all reflectors, lenses, flanges and other visible surfaces shall be carefully protected.
   3. Locations
      a. Install luminaires at locations and heights as indicated.
      b. Do not scale electrical drawings for locations of luminaires.
      c. Architectural reflected ceiling plans show locations of luminaires.
      d. Where noted on the drawings, the exact location of luminaires shall be confirmed (in the field) with the Architect/Engineer prior to installation.
      e. Where luminaires are to be concealed, or surface mounted in highly visible public spaces, a small sampling of luminaires shall be installed, adjusted and aimed for Architect/Engineer's review approval, prior to installing remaining luminaire of same type.
      f. Mount all luminaires so as to maintain full range of motion.
      g. Install luminaires plumb, square, and level with ceilings and walls.
      h. Coordinate stem, rod, chain, or aircraft cable hanger lengths with job conditions.
      i. Industrial type luminaires in unfinished areas, which are near obstructions such as ducts and pipes, shall be:
         1). Suspended so that bottom of luminaire is no higher than bottom of obstruction
         2). Located at height of lowest luminaire
         3). Shall not be located until locations of obstructions are determined.
   4. Support
      a. Support surface mount luminaires from building structure.
      b. Metal decking shall not be pierced for luminaire support.
      c. Provide luminaires and/or luminaire outlet boxes with hangers to support luminaire weight.
      d. Fluorescent troffers shall be held in place by support clips.
      e. Provide plaster frames for recessed luminaires in plaster ceilings.
      f. Recessed luminaires shall be supported with 12 ga wire hangers, 2 per luminaire, at diagonally opposite corners.
      g. Recessed 4” x 4” fluorescent troffers and luminaires over 55 lbs shall be supported with 12 ga wire hangers, 4 per luminaire, 2 at 45 degree diagonals, and two perpendicular to

structure. Wire hangers and attachment to structure shall be capable of supporting 4 times luminaires weight.

h. Surface luminaires installed in grid ceilings shall be supported by independent support clips and 12 ga wire.

i. Exit signs installed in grid ceilings shall be supported by electrical box hanger and additional 12 ga wire installed from box to structure.

j. Support surface mounted luminaires greater than 2 ft in length at a minimum of each additional 2 ft, or as recommended by manufacturer.

k. Brace suspended luminaires installed near ducts or other constructions with solid pendants or threaded rods.

l. Rigidly align continuous rows of luminaires.

m. Luminaire types with remote mounted ballast shall have:

1). Proper support for ballast weight.

2). Mounting distance from remote ballast to luminaire per manufacturer's recommendations.

5. Mounting and Enclosures

a. Install flush mounted luminaires to eliminate light leakage.

b. For luminaires mounted adjacent to insulation, provide barrier to prevent insulation from coming in contact with luminaire, unless luminaire is approved for installation in contact with such insulation.

c. Provide approved fire rated enclosures around luminaires in fire rated ceilings.

6. Conduit and Wiring

a. Wire for connections to lamp sockets and auxiliaries shall be suitable for temperature, current, and voltage conditions.

b. Recessed luminaires shall have final connections made with flexible metal conduit, not in excess of 72”, with THHN conductors and green wire ground conductor.

c. Conduit shall be hidden from normal view in all possible cases. In public areas where surface mounted conduit must be used, contractor shall install conduit as unobtrusively as possible. Contractor shall obtain field approval by the architect for all exposed conduit runs prior to rough in.

C. Lamps:

1. Provide new lamps delivered in original manufacturer’s cartons.

2. Fluorescent and metal halide lamps shall be energized continuously for not less than 100 hours for proper seasoning.

D. Grounding:

1. Ground luminaires and metal poles according to Division 26 Section "Grounding and Bonding for Electrical Systems".

E. Spare Parts:

1. Provide 5% spare lamps for each type in Luminaire Schedule

a. Spare lamps shall be delivered to Owner in new condition and in original packaging.

b. Manufacturer and model number shall match those installed in the project's luminaires.

2. Provide spare ballasts, 1 for every 100 of each type and rating installed. Furnish at least one of each type.

3. Provide spare globes and guards, 1 for every 20 of each type and rating installed. Furnish at least one of each type.

4. Provide spare parabolic louvers and reflector cones, 1 for every 100 of each type. Furnish at least one of each type.
5. Provide spare plastic diffusers and lenses, 1 for every 100 of each type and rating installed. Furnish at least one of each type.

**3.2** SUBSTANTIAL COMPLETION

A. Quality Control:
1. At Date of Substantial Completion, replace lamps which are not operating properly.
2. Replace any lamps used as worklights during construction phase.
3. Protection wrapping on louvered (parabolic) luminaires shall be removed before installation of furniture, but after finish work is complete.
4. Deliver spare lamps to Owner's representative.

B. Tests:
1. Give advance notice of dates and times for field tests.
2. Provide instruments to make and record test results.
3. Verify normal operation of each luminaire after luminaires have been installed and circuits have been energized.
4. Replace or repair malfunctioning luminaires and components, then retest. Repeat procedure until all units operate properly.
5. Report results of tests.

C. Adjusting and Cleaning:
1. Clean luminaires of handling marks, dust and dirt.
2. Cleaning and touch-up work shall be performed in accordance with luminaire manufacturer's recommendations.
3. Damaged luminaires or components shall be replaced with new.
4. Keep luminaires clean and protected for remainder of construction period.
5. Verify orientation of directional luminaires prior to installation.
   a. This includes wall washers, cove lighting, floodlights, exterior area lights and adjustable accent luminaires. Contractor shall provide electrician's services to aim, adjust, and focus luminaires, as required, at the direction of Architect/Engineer. These electricians shall be available at times designated by the Architect/Engineer and shall be provided at no extra charge to the Owner over base bid. Contractor shall provide equipment for luminaries' focus including ladders and mechanical lifting systems.
6. Program preset dimming system lighting levels.
7. No light leaks shall be permitted at the ceiling line from any visible part or joint.

D. Training
1. Contractor shall provide qualified personnel onsite to provide a minimum of eight hours of training to Owner's representatives.
2. This training shall cover:
   a. Luminaire use and maintenance
   b. Architectural lighting system use and maintenance
   c. Group relamping cycles

**END OF SECTION**

# SECTION 31 5000 - EXCAVATION RETENTION, SHORING AND BRACING

## PART 1 - GENERAL

### 1.1 RELATED DOCUMENTS

A. Drawings and general provisions of the Contract, including General and Supplementary Conditions and Division 01 Specification Sections, apply to this Section.

### 1.2 SUMMARY

A. Section includes:

1. Provide and install all components for excavation retention, shoring and bracing as may be required by existing conditions.
2. This Contractor shall design and provide all labor, materials, equipment and services necessary for and incidental to the furnishing, installation and maintenance of excavation retention, shoring and bracing.
3. Extent and sequencing of work required by this Section shall be coordinated with the Construction Manager and Concrete and Plumbing Contractors.

B. Related Sections:

1. Section 03 3000 – Cast-In-Place Concrete.
2. Mechanical and Plumbing Sections for drains, piping, basin and related items.

### 1.3 DESCRIPTION

A. All work of this Section shall be executed on a performance basis.

B. Design, provide, monitor and maintain excavation support where shown on the drawings and at other locations if necessary.

C. If necessary, underpin, shore or brace existing foundations or other improvements where necessary to complete the excavation for the project.

### 1.4 QUALIFICATIONS

A. This Contractor shall have a minimum of five years of experience in the type of work required by this Section.

B. This Contractor shall have on his staff a supervising engineer for this project having at least five years of design and construction experience in the type of work required.

C. This Contractor shall have a foreman experienced in the type of work required, who will be present while this work is being performed.

### 1.5 PROJECT CONDITIONS

A. A subsurface investigation has been made and the results are available in the Geotechnical Engineering Report for the Utility Spline Project by Terracon Consultants, Inc., dated September 22, 2016. This information was obtained primarily for use in preparing foundation design and evaluating existing conditions for adjoining construction.

1. Data on indicated subsurface conditions are not intended as representatives or warranties of continuity of such conditions. It is expressly understood that the Owner, Construction Manager, and Architect/Engineer will not be responsible for interpretations or conclusions drawn there from by the Contractor.
2. Data is made available for the convenience of the Contractor and is not guaranteed to represent conditions that may be encountered, nor is it to be included as part of the Contract Documents.
3. It is required that all Contractors or Subcontractors submitting bids for this part of the Work visit the site and make whatever additional investigations, including drilled test holes, they deem necessary to prepare their bids. All additional investigation work requires approval and coordination with the Owner. All test holes shall be filled immediately after investigation is completed to the satisfaction of the Owner. All additional investigations, including drilled test holes, test pits, etc., shall be paid for by the Contractor.

B. Prior to the execution of this work, this Contractor, Construction Manager, Architect and a representative from the Owner shall jointly survey the condition of adjacent structure, floor slab, piping, equipment and other construction. Photographs and records shall be made of any prior settlement or cracking and the like, that may become the subject of possible damage claims.

C. The Contractor is responsible for field locating and verifying the location of all existing utilities before starting the work. Maintain uninterrupted service for utilities designated to remain in service. Notify Construction Manager and Architect of any utility locations different from that shown on the plans.

D. Components of the excavation retention, shoring and bracing may penetrate areas of natural soils, fill, and rock. Debris, abandoned items from past construction, other obstructions, and water may be encountered. Contractor shall, within the Base Bid, be responsible for penetrating all obstructions, preventing caving of soils surrounding holes, and providing water protection and dewatering if necessary.

## 1.6 DESIGN CRITERIA

A. The excavation retention, shoring and bracing shall be designed by this Contractor to safely support all earth and surcharge pressures, including those from adjacent piping and equipment, without deflections or settlements that may cause damage.

B. This Contractor shall coordinate with the Construction Manager the location and weight of all construction equipment producing surcharge loads on the work of this Section.

C. Lateral pressure diagrams for use in the design of the excavation support shall use saturated soil conditions.

D. Refer to the Geotechnical Report for additional information and recommendations for design.

## 1.7 SUBMITTALS

A. Prior to starting work, submit for record calculations and sketches showing each proposed method of supporting adjacent earth and structures (i.e. retention system, sheeting, underpinning, other methods of bracing, etc). Include the following:

1. Lists of materials to be used.
2. Sequence of operations.
3. Detailed sections clearly illustrating the scope of work.
4. Relationship of components to new and existing construction.
5. Proposed procedures methods and details for monitoring the performance.

B. Drawings and calculations containing the information indicated above shall be prepared under the direct supervision of a qualified Professional Engineer registered in Kentucky.

C. The Architect/Engineer's review of the Contractor's submittals will be for general intent only. The Contractor is solely responsible for the design and performance of the excavation retention, shoring and bracing.

### 1.8 QUALITY CONTROL AND ASSURANCE

A. The Contractor shall observe installation for conformance with the design requirements and shall inspect and monitor the performance of the installed excavation support, including initial and bi-weekly measurements of lateral deflection.

B. The Contractor shall report results of tests and inspections to the Construction Manager.

C. The Contractor shall take immediate action to correct any deficiencies.

### 1.9 WARRANTY

A. Restore and repair to the Owner's satisfaction all structure, floor slab, piping, equipment and property damaged due to movement of the excavation retention, shoring and bracing.

## PART 2 - PRODUCTS

### 2.1 MATERIALS

A. Cast-in-place concrete, including reinforcement and testing, shall comply with American Concrete Institute (ACI) 301 Specifications for Structural Concrete.

B. Structural steel components shall comply with American Institute of Steel Construction (AISC) 360 Specification for Structural Steel Buildings.

C. Wood lagging shall be of sufficient size and quality to retain the calculated earth pressures.

## PART 3 - EXECUTION

### 3.1 EXAMINATION

A. This Contractor shall examine areas and conditions under which the work is to be performed. Notify Construction Manager of conditions detrimental to proper completion of the Work.

B. Starting of work constitutes acceptance of existing conditions and substrates.

### 3.2 PROTECTION

A. Before excavating, verify locations of underground utilities with the Construction Manager. Excavate carefully to exposed and establish exact utility locations where necessary.

B. Where active utilities are encountered but not shown on Drawings, the Construction Manager, Architect and Owner shall be notified; and work shall be protected, supported, or relocated as directed. Repair damaged utilities to the satisfaction of the Owner, and Construction Manager.

C. Inactive and abandoned utilities encountered shall be reported to the Construction Manager. The utilities shall be removed, plugged or capped as directed. In absence of specific requirements, plug or cap such utility lines as required by the local regulations.

## 3.3 INSTALLATION OF UNDERPINNING

A. If underpinning is required it shall be constructed as follows: After excavation, thoroughly clean contact surface of the underside of existing foundations or objects to be supported. Bring underpinning concrete up to within 4" of bottom of existing bearing surface and fill remaining space with grout. Make grout as dry as possible and pack firmly, leaving no voids.

B. Underpinning shall be placed sequentially in such a manner to maintain the safety and stability of the excavation and existing construction.

## 3.4 COORDINATION WITH OTHER OPERATIONS

A. Installation and sequencing of excavation support work shall be coordinated with the work of all other trades affected by this work.

## 3.5 WASTE REMOVAL

A. Remove from the site and legally dispose of all waste material resulting from or caused by work of this Section.

**END OF SECTION 31 5000**

## EQUIPMENT NAMING AND IDENTIFICATION

NOTES:
1. THIS SECTION REPRESENTS HOW EQUIPMENT IS TO BE LABELED ONCE IT IS PHYSICALLY INSTALLED AS PART OF THE CONSTRUCTION PROCESS.
2. ELECTRICAL EQUIPMENT IDENTIFICATION TAGS AND LABELING USED ON THESE DRAWINGS DO NOT CORRESPOND DIRECTLY TO THE LABELEING OF SUCH EQUIPMENT ONCE IT IS INSTALLED. EQUIPMENT HAS BEEN LABELED ON THESE DRAWINGS PER THE AEI ELECTRICAL IDENTIFICATION REQUIREMENTS FOR THE EASE OF REFERENCE. ONCE ELECTRICAL EQUIPMENT HAS BEEN INSTALLED IT'S LABELING SHALL ADHERE SPECIFICALLY TO THE UNIVERSITY OF KENTUCKY ELECTRICAL IDENTIFICATION REQUIREMENTS AS INDICATED BELOW.
3. CONTRACTOR SHALL BE RESPONSIBLE FOR PHYSICALLY LABELING ELECTRICAL EQUIPMENT AS IDENTIFIED IN THE UNIVERSITY OF KENTUCKY ELECTRICAL IDENTIFICATION REQUIREMENTS PER THE DIVISION 26 SPECIFICATIONS.
4. ELECTRICAL CONTRACTOR SHALL VERIFY ALL FINAL LABELING OF ALL ELECTRICAL EQUIPMENT WITH THE UNIVERSITY OF KENTUCKTY PRIOR TO INSTALLATION.

### 260553S01 - ELECTRICAL IDENTIFICATION
### GUIDELINES FOR NAMING POWER DISTRIBUTION SYSTEM COMPONENTS

THE PURPOSE OF THIS STANDARD IS TO ESTABLISH CONSISTENCY IN THE NAMING OF COMPONENTS IN THE ELECTRICAL DISTRIBUTION SYSTEM AND MECHANICAL SYSTEMS. IT IS INTENDED TO PROVIDE EASY IDENTIFICATION OF A COMPONENT'S LOCATION, POWER SUPPLY, AND LOAD INFORMATION FROM THE EQUIPMENT LABEL SOLELY AND TO MAKE IT EASY TO TRACE EQUIPMENT POWER SOURCES AND LOADS FOR MAINTENANCE PURPOSES. THE FOLLOWING GUIDELINES SHOULD APPLY IN ALMOST ALL CASES FOR ALL ELECTRIC POWERED EQUIPMENT AND ELECTRICAL GEAR. FOR THOSE ITEMS WHICH CANNOT BE PRODUCED FROM THESE GUIDELINES, THEN FURTHER GUIDANCE SHOULD BE OBTAINED FROM THE APPROPRIATE ELECTRICAL SYSTEMS SUPERVISOR.
ANY LABEL THAT BELONGS TO EQUIPMENT WITHIN THE EMERGENCY POWER SUBSYSTEM SHALL BE RED WITH WHITE LETTERING. ALL OTHER LABELS SHALL BE BLACK WITH WHITE LETTERING. ADDITIONALLY, ALL LABELS WILL HAVE AT LEAST TWO LINES--ONE DESIGNATING THE COMPONENT NAME AND THE OTHER DESIGNATING THE COMPONENT'S POWER SOURCE. IN THE CASE OF A COMPONENT WITH MULTIPLE FEEDS, THERE SHALL BE SEPARATE LINE FOR EACH POWER SOURCE COMPONENT NAME.

**FORMAT:**
THE COMPONENTS WILL BE LABELED USING THE FOLLOWING FORMAT:

ID: ROOM NO./EQUIPMENT NAME-SPECIFIC DEVICE NUMBER
FED FROM: ROOM NO./EQUIPMENT NAME-SPECIFIC DEVICE NUMBER

EACH FIELD HAS A SPECIFIED NUMBER OF CHARACTERS AND IS DEFINED AS FOLLOWS:
*ROOM* (UP TO 5 CAPITALIZED CHARACTERS) => THE ROOM IN WHICH THE COMPONENT IS LOCATED; IF COMPONENT IS IN A CORRIDOR USE "CORR".
*EQUIPMENT NAME* (UP TO 8 CAPITALIZED CHARACTERS) => THE NAME OF THE PARTICULAR TYPE OF EQUIPMENT FROM THE PPDMC EQUIPMENT NAMING CONVENTION LIST SHOWN BELOW.
*SPECIFIC NUMBER* (UP TO 3 CHARACTERS) => THE NUMBER OF THAT PARTICULAR DEVICE FROM THE DRAWING OR THE NEXT SEQUENTIAL NUMBER IN THAT EQUIPMENT TYPE.

### EQUIPMENT DESCRIPTION / EQUIPMENT NAME

AIR CONDITIONING UNITS / ACU-X
AIR HANDLER UNITS / AHU-X
BACKFLOW PREVENTOR / BFP-X
CHILLED WATER PUMP / CHW/PMP-X
CHILLERS / CHL-X
COMPACTOR / CPT-X
CONDENSATE PUMP / CND/PMP-X
CONTROL AIR COMPRESSOR / CA/CMP-X
CONVEYOR / CNV-X
CRITICAL BRANCH AUTOMATIC TRANSFER SWITCH / C/ATS-X
CRITICAL BRANCH DISTRIBUTION PANEL / C/DP-X
CRITICAL BRANCH MOTOR CONTROL CTR / C/MCC-X
CRITICAL BRANCH PANEL / C/P-X
CRITICAL BRANCH SWITCHBOARD / C/SWBD-X
CRITICAL BRANCH SWITCHGEAR / C/SWGR-X
CRITICAL BRANCH TRANSFORMER / C/T-X
DOMESTIC COLD WATER PUMP / DCW/PMP-X
DOMESTIC HOT WATER PUMP / DHW/PMP-X
DUMB WAITERS / DUM-X
ELEVATORS / ELEV-X
EMERGENCY AUTOMATIC TRANSFER SWITCH / E/ATS-X
EMERGENCY DISTRIBUTION PANEL / E/DP-X
EMERGENCY GENERATOR / EG-X
EMERGENCY MOTOR CONTROL CTR / E/MCC-X
EMERGENCY PANEL / E/P-X
EMERGENCY SWITCHBOARD / E/SWBD-X
EMERGENCY SWITCHGEAR / E/SWGR-X
EMERGENCY TRANSFORMER / E/T-X
EXHAUST FANS / EXF-X
FAN COIL UNIT / FCU-X
FIRE PUMP / SPR/PMP-X
HEAT EXCHANGER / HTX-X
HOT WATER HEATER / HWH-X
LABORATORY AIR COMPRESSOR / LA/CMP-X
LABORATORY VACUUM PUMP / LV/PMP-X
LIFE SAFETY AUTOMATIC TRANSFER SWITCH / LS/ATS-X
LIFE SAFETY DISTRIBUTION PANEL / LS/DP-X
LIFE SAFETY PANEL / LS/P-X
LIFE SAFETY SWITCHBOARD / LS/SWBD-X
LIFE SAFETY SWITCHGEAR / LS/SWGR-X
LIFE SAFETY TRANSFORMER / LS/T-X
MEDICAL AIR COMPRESSOR / AIR/CMP-X
MEDICAL VACUUM PUMP / VAC/PMP-X
NORMAL POWER AUTOMATIC TRANSFER SWITCH / N/ATS-X
NORMAL POWER DISTRIBUTION PANEL / N/DP-X
NORMAL POWER MOTOR CONTROL CTR / N/MCC-X
NORMAL POWER PANEL / N/P-X
NORMAL POWER SWITCHBOARD / N/SWBD-X
NORMAL POWER SWITCHGEAR / N/SWGR-X
NORMAL POWER TRANSFORMER / N/T-X
REHEAT PUMP / RHT/PMP-X
TUBE SYSTEM TRANSFER STATION / TUBE/STN-X
VARIABLE SPEED DRIVE / VSD-X

**EXAMPLES:**
A TYPICAL NORMAL POWER DISTRIBUTION PANEL ON THE SECOND FLOOR OF THE MAIN HOSPITAL IN ROOM H-201 MIGHT BE LABELED H201/N/DP-1.
A MOTOR CONTROL CENTER IN THE PENTHOUSE OF THE COMBS BUILDING MIGHT BE LABELED 401/N/MCC-1.
A CHILLED WATER PUMP IN H-46 MIGHT BE LABELED AS H46/CHW/PMP-1 FOR THE LOAD DESIGNATION AND H46/N/P-3 FOR THE SOURCE DESIGNATION.

NOTE: THE COMPONENT IDENTIFICATION NUMBER, OR SEQUENCE NUMBER, IS JUST A SIMPLE NUMBERING OF SIMILAR EQUIPMENT ON THE SAME FLOOR NUMBERED FROM LEFT TO RIGHT AS SEEN ON THE ELECTRICAL DISTRIBUTION RISER DIAGRAM PROVIDED BY THE ARCHITECTS. THEREFORE, IT IS IMPORTANT TO NOTE THE BUILDING AND FLOOR WHEN REFERRING TO A COMPONENT TO DETERMINE ITS LOCATION. IF THE COMPONENTS TO BE LABELED ARE EXISTING EQUIPMENT OR NEW EQUIPMENT IN AN EXISTING BUILDING, THE COMPONENT SEQUENCE NUMBER SHOULD BE OBTAINED FROM THE APPROPRIATE ELECTRICAL SYSTEMS SUPERVISOR. IF THE EQUIPMENT IS BEING INSTALLED AS PART OF A NEW BUILDING CONSTRUCTION PROJECT, THEN THE CONTRACTOR MAY DETERMINE THE SEQUENCE NUMBERS.

## ELECTRICAL SYMBOLS AND ABBREVIATIONS

NOTES: 1. SYMBOLS INDICATED HERE AND NOT USED IN THE CONTRACT DOCUMENTS DO NOT APPLY TO THIS PROJECT. ADDITIONAL SYMBOLS MAY BE INDICATED IN THE CONTRACT DOCUMENTS.
2. EXISTING TO REMAIN IS SHOWN WITH DASHED LIGHT LINES.
3. NEW WORK IS SHOWN WITH SOLID HEAVY LINES.

### EQUIPMENT AND WIRING

- MOTOR
- TRANSFORMER - ONE LINE DIAGRAM
- ISOLATION TRANSFORMER - ONE LINE DIAGRAM
- GROUND CONNECTION
- TRANSFORMER (T)
- PANELBOARD - NORMAL SURFACE MOUNTED
- PANELBOARD - NORMAL FLUSH MOUNTED
- PANELBOARD - EMERGENCY/LIFE SAFETY SURFACE MOUNTED
- PANELBOARD - EMERGENCY/LIFE SAFETY FLUSH MOUNTED
- PANELBOARD - CRITICAL SURFACE MOUNTED
- PANELBOARD - CRITICAL FLUSH MOUNTED
- LOW VOLTAGE LIGHTING CONTROL PANEL - SURFACE MOUNTED
- LOW VOLTAGE LIGHTING CONTROL PANEL - FLUSH MOUNTED
- DISTRIBUTION PANELBOARD (NTS)
- MOTOR CONTROL CENTER (MCC)
- CABLE TAP BOX
- BUSWAY PLUG-IN UNIT
- CURRENT TRANSFORMER
- POTENTIAL TRANSFORMER
- REVERSE POWER RELAY
- NON FUSED DISCONNECT SWITCH
- FUSED DISCONNECT SWITCH (F)
- BREAKER DISCONNECT SWITCH (B)
- MAGNETIC MOTOR STARTER
- COMBINATION MOTOR STARTER
- MANUAL STARTER W/OVERLOAD PROTECTION ($M)
- SURFACE JUNCTION BOX (J)
- SURFACE JUNCTION BOX - WALL
- FLUSH JUNCTION BOX - CEILING (J)
- FLUSH JUNCTION BOX - WALL
- FLUSH JUNCTION BOX - FLOOR (J)
- DOWN CONDUCTOR
- STUB
- TEST WELL
- CONTROL PANEL (CP)
- AUTOMATIC TRANSFER SWITCH
- VOLTMETER & SELECTOR SWITCH (V, VS)
- AMMETER, SELECTOR SWITCH, & CT'S (A, AS)
- ENGINE GENERATOR SET (EGS)
- REMOTE GENERATOR ANNUNCIATOR (GEN)
- REMOTE GROUND INDICATOR (G)
- ROOM REFERENCE GROUND POINT (GP)
- GROUND CONNECTION - PLUG-IN
- LINE VOLTAGE THERMOSTAT (T)
- REVENUE METER, kWh/D (KWH)
- METER WITH CURRENT TRANSFORMER (KWH)
- MOLDED CASE CIRCUIT BREAKER
- LOW VOLTAGE DRAW-OUT AIR CIRCUIT BREAKER

CIRCUIT BREAKER TRIP UNIT FEATURES
L LONG TIME DELAY
S SHORT TIME DELAY
I INSTANTANEOUS
G GROUND FAULT
A ARC FLASH REDUCTION

- TEST SWITCH (TS)
- SWITCH - ONE LINE DIAGRAM
- GROUNDED "Y" SYSTEM
- ELECTRIC HEATER (H)
- RELAY - TYPE AS NOTED (R)
- TIMING RELAY (TR)
- AIR TERMINAL
- PUSH BUTTON
- KIRK KEY INTERLOCK (K)
- PHYSIOLOGICAL MONITOR OUTLET (PM)
- FUSE
- PANEL DIVISION ARROW
- PANEL DIVISION LINE
- WIRING CONCEALED IN FLOOR
- WIRING IN CEILING/WALLS
- HOMERUN
  PNL. A1 INDICATES PANEL AND CIRCUIT
  INDICATES NUMBER OF CONDUCTORS
  INDICATES NEUTRAL CONDUCTOR
  INDICATES GROUND CONDUCTOR
  A-1,3,5 - PANEL AND CIRCUITS; PANEL A, CIRCUITS 1,3,5
- GROUNDING ROD
- GROUNDING BUS

### RECEPTACLES

- DUPLEX RECEPTACLE
  MOUNTING LOCATION: WALL
  MOUNTING HEIGHT: 1'-6"
- EMERGENCY DUPLEX RECEPTACLE
  MOUNTING LOCATION: WALL
  MOUNTING HEIGHT: 1'-6"
- SINGLE RECEPTACLE
  MOUNTING LOCATION: WALL
  MOUNTING HEIGHT: 1'-6"
- DOUBLE DUPLEX RECEPTACLE
  MOUNTING LOCATION: WALL
  MOUNTING HEIGHT: 1'-6"
- EMERGENCY DOUBLE DUPLEX RECEPTACLE
  MOUNTING LOCATION: WALL
  MOUNTING HEIGHT: 1'-6"
- DUPLEX RECEPTACLE - ABOVE CASEWORK OR 2" ABOVE COUNTERTOP BACKSPLASH
  MOUNTING LOCATION: WALL
  MOUNTING HEIGHT: FIELD VERIFY
- EMERGENCY DUPLEX RECEPTACLE - ABOVE CASEWORK OR 2" ABOVE COUNTERTOP BACKSPLASH
  MOUNTING LOCATION: WALL
  MOUNTING HEIGHT: FIELD VERIFY
- POWER OUTLET
  MOUNTING LOCATION: WALL
  MOUNTING HEIGHT: 1'-6"
- POWER OUTLET, EMERGENCY CIRCUIT
  MOUNTING LOCATION: WALL
  MOUNTING HEIGHT: 1'-6"
- FIXED EQUIPMENT CONNECTION - WALL
  MOUNTING LOCATION: WALL
  MOUNTING HEIGHT: 1'-6"
- FIXED EQUIPMENT CONNECTION - WALL EMERGENCY CIRCUIT
  MOUNTING LOCATION: WALL
  MOUNTING HEIGHT: 1'-6"
- LOCKING RECEPTACLE
  MOUNTING LOCATION: WALL
  MOUNTING HEIGHT: 1'-6"
- SWITCH/ RECEPTACLE
  MOUNTING LOCATION: WALL
  MOUNTING HEIGHT: 3'-6"
- POKE THRU CONNECTION FLOOR STANDARD
- DUPLEX RECEPTACLE LOCATED IN SURFACE MOUNTED RACEWAY
- EMERGENCY DUPLEX RECEPTACLE LOCATED IN SURFACE MOUNTED RACEWAY
- POWER OUTLET IN SURFACE MOUNTED RACEWAY VOLTAGE AND AMPERAGE AS INDICATED
- EMERGENCY POWER OUTLET IN SURFACE MOUNTED RACEWAY VOLTAGE AND AMPERAGE AS INDICATED
- DUPLEX RECEPTACLE, UPPER HALF SWITCHED, LOWER HALF HOT MOUNTING LOCATION: WALL
  MOUNTING HEIGHT: 1'-6"
- DOUBLE DUPLEX RECEPTACLE - ABOVE CASEWORK OR 2" ABOVE COUNTERTOP BACKSPLASH
  MOUNTING LOCATION: WALL
  MOUNTING HEIGHT: FIELD VERIFY
- EMERGENCY DOUBLE DUPLEX RECEPTACLE - ABOVE CASEWORK OR 2" ABOVE COUNTERTOP BACKSPLASH
  MOUNTING LOCATION: WALL
  MOUNTING HEIGHT: FIELD VERIFY
- DUPLEX RECEPTACLE - CEILING MOUNTED
  MOUNTING LOCATION: CEILING
- EMERGENCY DUPLEX RECEPTACLE - CEILING MOUNTED
  MOUNTING LOCATION: CEILING
- DOUBLE DUPLEX RECEPTACLE - CEILING MOUNTED
  MOUNTING LOCATION: CEILING
- EMERGENCY DOUBLE DUPLEX RECEPTACLE - CEILING MOUNTED
  MOUNTING LOCATION: CEILING
- DUPLEX RECEPTACLE - FLOOR MOUNTED
  MOUNTING LOCATION: FLOOR
- FIXED EQUIPMENT CONNECTION MOUNTING LOCATION: COORDINATE W/ EQUIPMENT
- CLOCK RECEPTACLE
  MOUNTING LOCATION: WALL
  MOUNTING HEIGHT: 8'-0"
- OUTLETS INSTALLED IN SURFACE MOUNTED RACEWAY (J, OR, J, J)
- SURFACE MOUNTED RACEWAY (J, A)
  A = 6" OUTLET SPACING
  B = 9" OUTLET SPACING
  C = 12" OUTLET SPACING
  D = 18" OUTLET SPACING
  E = 30" OUTLET SPACING

### FIRE

- FIRE ALARM PULL STATION (F)
  MOUNTING LOCATION: WALL
  MOUNTING HEIGHT: 4'-0"
- FIRE ALARM STROBE ONLY (F)
  MOUNTING LOCATION: WALL
  MOUNTING HEIGHT: SEE NOTE 1
- FIRE ALARM COMBINATION VOICE/STROBE (F, V)
  MOUNTING LOCATION: WALL
  MOUNTING HEIGHT: SEE NOTE 1
- FIRE ALARM PRESSURE SWITCH (F, PS)
  MOUNTING LOCATION: FIELD VERIFY
- FIRE ALARM HEAT DETECTOR (F, H)
  MOUNTING LOCATION: CEILING
- FIRE ALARM SMOKE DETECTOR (F, S)
  MOUNTING LOCATION: CEILING
- FIRE ALARM WATERFLOW SWITCH (F, WF)
  MOUNTING LOCATION: SPRINKLER PIPE
  MOUNTING HEIGHT: FIELD VERIFY
- FIRE ALARM TAMPER SWITCH (F, TS)
  MOUNTING LOCATION: SPRINKLER PIPE
  MOUNTING HEIGHT: FIELD VERIFY
- FIRE ALARM CONTROL PANEL

NOTES:
1. 80" AFF TO BOTTOM OF FACEPLATE OR 6" FROM TOP OF FACEPLATE TO CEILING, WHICH EVER IS LOWER

### LIGHTING

TYPE
CIRCUIT/SWITCH

| TYPE | DESCRIPTION | SUFFIX | DESCRIPTION |
|---|---|---|---|
| F | STANDARD LED | E | EMERGENCY |
| X | EXIT LIGHT | | |

- SURFACE MOUNTED LINEAR FIXTURE MOUNTING LOCATION: CEILING
- SURFACE MOUNTED LINEAR FIXTURE MOUNTING LOCATION: WALL
- PENDANT/SUSPENDED LINEAR FIXTURE
- SURFACE MOUNTED EMERGENCY FIXTURE LOCATION: CEILING
- SURFACE MOUNTED EMERGENCY FIXTURE MOUNTING LOCATION: WALL
- PENDANT/SUSPENDED EMERGENCY FIXTURE
- SURFACE MOUNTED EMERGENCY WALL PACK MOUNTING LOCATION: WALL
- DOUBLE HEAD EMERGENCY FIXTURE WITH BATTERY PACK
- DIRECTIONAL INDICATOR ADDED TO FIXTURE SYMBOL TO DESIGNATE AIMING DIRECTION
- EXIT DIRECTIONAL ARROW
- SINGLE FACE EXIT FIXTURE MOUNTING LOCATION: CEILING
- DOUBLE FACE EXIT FIXTURE MOUNTING LOCATION: CEILING
- SINGLE FACE EXIT FIXTURE MOUNTING LOCATION: WALL
- DOUBLE FACE EXIT FIXTURE MOUNTING LOCATION: WALL

### SWITCHES

- SINGLE POLE SWITCH ($a) MOUNTING LOCATION: WALL MOUNTING HEIGHT: 3'-6" a = SWITCH DESIGNATION
- THREE WAY SWITCH ($3W a) MOUNTING LOCATION: WALL MOUNTING HEIGHT: 3'-6" a = SWITCH DESIGNATION

### ELECTRICAL ABBREVIATIONS

| | | | | | |
|---|---|---|---|---|---|
| A | - | AMPERES | KO | - | KNOCK-OUT |
| AC | - | ABOVE CEILING/ALTERNATING CURRENT | KV | - | KILOVOLT |
| ADO | - | AUTOMATIC DOOR OPENER | KVA | - | KILOVOLT-AMPERES |
| AF | - | AMPERE FRAME | KW | - | KILOWATTS |
| AFC | - | ABOVE FINISHED FLOOR | KWH | - | KILOWATT HOURS |
| AFG | - | ABOVE FINISHED GRADE | LAN | - | LOCAL AREA NETWORK |
| AIC | - | AMP INTERRUPTING CAPACITY | LGT | - | LIGHT |
| ALT | - | ALTERNATE | LTCP | - | LOCAL TEMPERATURE CONTROL PANEL |
| ARCH | - | ARCHITECTURAL | LTG | - | LIGHTING |
| ASC | - | ABOVE SUSPENDED CEILING | LTS | - | LIGHTS |
| AT | - | AMPERE TRIP | LV | - | LOW VOLTAGE |
| ATS | - | AUTOMATIC TRANSFER SWITCH | MATV | - | MASTER ANTENNA TELEVISION |
| AUTO | - | AUTOMATIC | MC | - | MECHANICAL CONTRACTOR |
| BATS | - | BYPASS AUTOMATIC TRANSFER SWITCH | MCB | - | MAIN CIRCUIT BREAKER |
| BC | - | BARE COPPER | MCC | - | MOTOR CONTROL CENTER |
| BFC | - | BELOW FINISH CEILING | MCP | - | MOTOR CIRCUIT PROTECTOR |
| BFL | - | BELOW FLOOR LEVEL | MDP | - | MAIN DISTRIBUTION PANEL |
| BLDG | - | BUILDING | MER | - | MECHANICAL EQUIPMENT ROOM |
| BPIP | - | BOILER PLANT INSTRUMENTATION PANEL | MLO | - | MAIN LUGS ONLY |
| BRKR | - | BREAKER | MH | - | MANHOLE |
| C | - | CONDUIT | MPTB | - | MUSIC & PAGE TERMINAL BOX |
| CB | - | CIRCUIT BREAKER | MTD | - | MOUNTED |
| CCTV | - | CLOSED CIRCUIT TELEVISION | MTG | - | MOUNTING |
| CCT | - | CIRCUIT | MTG HGT | - | MOUNTING HEIGHT |
| CCT BKR | - | CIRCUIT BREAKER | MTR | - | MOTOR/METER |
| CFCI | - | CONTRACTOR FURNISHED, CONTRACTOR INSTALLED | NA | - | NOT APPLICABLE |
| | | | NC | - | NEW CONNECTION/NORMALLY CLOSED |
| CLG | - | CEILING | NEC | - | NATIONAL ELECTRICAL CODE |
| CO | - | CONDUIT ONLY | NFD | - | NON-FUSED DISCONNECT |
| CONTR | - | CONTRACTOR | NFSS | - | NON-FUSED SAFETY SWITCH |
| CORR | - | CORRIDOR | NIC | - | NOT IN CONTRACT |
| CR | - | CONTROL RELAY | NO | - | NORMALLY OPEN |
| CT | - | CURRENT TRANSFORMER | NTS | - | NOT TO SCALE |
| DB | - | DIRECT BURIAL | OC | - | ON CENTER |
| DC | - | DIRECT CURRENT | OFCI | - | OWNER FURNISHED CONTRACTOR INSTALLED |
| DED | - | DEDICATED | | | |
| DET | - | DETAIL | OFOI | - | OWNER FURNISHED OWNER INSTALLED |
| DIA | - | DIAMETER | P | - | POLE |
| DISC | - | DISCONNECT | PA | - | PUBLIC ADDRESS |
| DN | - | DOWN | PB | - | PULL BOX/PUSHBUTTON |
| DP | - | DISTRIBUTION PANEL | PBPU | - | PREFABRICATED BEDSIDE PATIENT |
| DS | - | DISCONNECT SWITCH | | | POWER UNIT |
| EC | - | EMPTY CONDUIT/ELECTRICAL CONTRACTOR | PC | - | PLUMBING CONTRACTOR/PHOTOCELL |
| ECL | - | EMERGENCY CRITICAL LIGHTING | PDU | - | POWER DISTRIBUTION UNIT |
| ECP | - | EMERGENCY CRITICAL POWER | PF | - | POWER FACTOR |
| EDB | - | ELECTRIC DUCT BANK | PH | - | PHASE |
| EG | - | EQUIPMENT GROUND | PLBG | - | PLUMBING |
| EGS | - | ENGINE GENERATOR SET | PNL | - | PANEL |
| EJ | - | EXPANSION JOINT | POD | - | POWER OPERATED DAMPER |
| ELEC | - | ELECTRIC/ELECTRICAL | PT | - | POTENTIAL TRANSFORMER |
| ELL | - | EMERGENCY LIFE SAFETY LIGHTING | PTRV | - | POWER TYPE ROOF VENTILATOR |
| ELP | - | EMERGENCY LIFE SAFETY POWER | PWR | - | POWER |
| EMER | - | EMERGENCY | REC | - | RECESSED |
| EMI | - | ELECTROMAGNETIC INTERFERENCE | RECEP | - | RECEPTACLE |
| EMT | - | ELECTRICAL METALLIC TUBING | REL | - | RELOCATE |
| EQUIP | - | EQUIPMENT | REQD | - | REQUIRED |
| ESM | - | ELECTRIC STRIP MOLD | RGIP | - | REMOTE GROUND INDICATOR PANEL |
| ETR | - | EXISTING TO REMAIN | RMC | - | RIGID METAL CONDUIT |
| EWC | - | ELECTRIC WATER COOLER | RSC | - | RIGID STEEL CONDUIT (HEAVY WALL GALVANIZED STEEL) |
| F/FC | - | FLUSH WITH FINISHED CEILING | RVAT | - | REDUCED VOLTAGE AUTO TRANSFORMER |
| F/FF | - | FLUSH WITH FINISHED FLOOR | SHT | - | SHEET |
| F/FW | - | FLUSH WITH FINISHED WALL | SIG | - | SIGNAL |
| FA | - | FIRE ALARM | SIM | - | SIMILAR |
| FACP | - | FIRE ALARM CONTROL PANEL | SPEC | - | SPECIFICATION |
| FCU | - | FAN COIL UNIT | SPD | - | SURGE PROTECTION DEVICE |
| FDR | - | FEEDER | SS | - | SAFETY SWITCH |
| FDS | - | FUSED DISCONNECT SWITCH | SSRV | - | SOLID-STATE REDUCED VOLTAGE |
| FI | - | FILM ILLUMINATOR | STA | - | STATION |
| FIXT | - | FIXTURE | STR | - | STARTER |
| FL | - | AT FLOOR LINE | SW | - | SWITCH |
| FLA | - | FULL LOAD AMPERES | SWBD | - | SWITCHBOARD |
| FLEX | - | FLEXIBLE | SWGR | - | SWITCHGEAR |
| FLR | - | FLOOR | TEL | - | TELEPHONE |
| FLUOR | - | FLUORESCENT | TFA | - | TO FLOOR ABOVE |
| FS | - | FLOW SWITCH | TFB | - | TO FLOOR BELOW |
| FSS | - | FUSED SAFETY SWITCH | TS | - | TAMPER SWITCH/TIME SWITCH |
| FSCP | - | FLAME SAFEGUARD CONTROL PANEL | TV | - | TELEVISION |
| FVNR | - | FULL VOLTAGE NON-REVERSING | TVTC | - | TELEVISION TERMINAL CABINET |
| GC | - | GENERAL CONTRACTOR | TYP | - | TYPICAL |
| GFCI | - | GROUND FAULT CIRCUIT INTERRUPTER | UC | - | UNDER COUNTER |
| GFP | - | GROUND FAULT PROTECTION | UG | - | UNDERGROUND |
| GND | - | GROUND | UH | - | UNIT HEATER |
| GEN | - | GENERATOR | UNO | - | UNLESS NOTED OTHERWISE |
| GFI | - | GROUND FAULT INTERRUPTER | UPS | - | UNINTERRUPTED POWER SUPPLY |
| GTB | - | GROUND TERMINAL BOX | V | - | VOLTAGE |
| HH | - | HANDHOLE | VFD | - | VARIABLE FREQUENCY DRIVE |
| HOA | - | HAND OFF AUTOMATIC | VP | - | VAPOR PROOF |
| HP | - | HORSE POWER | W | - | WIRE |
| HT | - | HEIGHT/HEAT TRACE | W/ | - | WITH |
| HV | - | HIGH VOLTAGE | WP | - | WEATHERPROOF |
| IMC | - | INTERMEDIATE METAL CONDUIT | WS | - | WALL SURFACE |
| INCAND | - | INCANDESCENT | WT | - | WATER TIGHT |
| JB | - | JUNCTION BOX | X | - | EXISTING |
| KFAN | - | SYNTHETIC OIL (FORCED CIRCULATION) AIR COOLED (NATURAL CONVECTION) | XFMR | - | TRANSFORMER |
| | | | XP | - | EXPLOSION PROOF |
| KNAN | - | SYNTHETIC OIL (NATURAL CIRCULATION) AIR COOLED (NATURAL CONVECTION) | | | |

### SHEET SYMBOLS

- NOTE DESIGNATION (#)
- DETAIL REFERENCE TOP DESIGNATES DETAIL NUMBER BOTTOM DESIGNATES ON WHICH SHEET DETAIL APPEARS (1 / X0.0)
- PLAN CONTINUATION DESIGNATION (REFER / X0.0)
- SECTION REFERENCE TOP DESIGNATES SECTION NUMBER BOTTOM DESIGNATES ON WHICH SHEET SECTION APPEARS (1 / X0.0)
- LINE CONTINUE BREAK
- ELEVATION DESIGNATION
- REVISION NUMBER DESIGNATION (#)
- NEW WORK CONNECTION TO EXISTING WORK DESIGNATION
- EQUIPMENT DESIGNATION (EQ #) TOP DESIGNATES EQUIPMENT ABBREVIATION BOTTOM DESIGNATES EQUIPMENT NUMBER

### UNIT CONVERSIONS

### CONDUIT CONVERSION

| | | | |
|---|---|---|---|
| 1/2" | = 16mm | 2-1/2" | = 63mm |
| 3/4" | = 21mm | 3" | = 78mm |
| 1" | = 27mm | 3-1/2" | = 91mm |
| 1-1/4" | = 35mm | 4" | = 103mm |
| 1-1/2" | = 41mm | 5" | = 129mm |
| 2" | = 53mm | 6" | = 155mm |


CHAMPLIN ARCHITECTURE
720 E Pete Rose Way, Suite 140
Cincinnati, OH 45202
T 513.241.4474 F 513.241.0081
thinkchamplin.com
THINK CREATE REALIZE


AEI Affiliated Engineers

THP

UNIVERSITY OF KENTUCKY

**CAMPUS INFRASTRUCTURE & C.U.P.**

BID PACKAGE 8

University of Kentucky

LEXINGTON, KENTUCKY

**ISSUANCES**

| No. | Description | Date |
|---|---|---|
| 1 | Issued for Bid and Permit | 01/12/18 |

| | |
|---|---|
| Drawn By | TU |
| Checked By | AS |
| Client Number | 514 |
| Project Number | 5601 |

STATE OF KENTUCKY ANDREW SCHMITZ 25963 LICENSED PROFESSIONAL ENGINEER
1/10/18 Exp: 6/30/18

ELECTRICAL SYMBOLS AND ABBREVIATIONS

E001.8

## LUMINAIRE SCHEDULE

| SYMBOL | TYPE | DESCRIPTION | MANUFACTURER | MODEL NUMBER | LAMPS | | | | | | VOLTAGE | MOUNTING | REMARKS |
|---|---|---|---|---|---|---|---|---|---|---|---|---|---|
| | | | | | TYPE | QTY | WATTS PER LAMP | WATTS TOTAL | DELIVERD LUMENS (INITIAL) | COLOR | | | |
| | F3 | 4'-0" LONG TURRET INDUSTRIAL FLUORSECENT WITH SOLID TOP REFLECTOR, 13 DEGREE SHIELDING ANGLE, DIE EMBOSSED COLD ROLLED STEEL REFLECTOR, TWIST-LOCK LAMPHOLDERS ENCLOSED IN SNAP-IN HOUSING, REFLECTOR ALIGNERS, CHANNEL CONNECTORS, MULTI-VOLT SOLID STATE 10% THD ELECTRONIC BALLAST, WHITE ENAMEL FINISH, WIRE GUARD, AND HANGER CHAIN | FIXTURE: LITHONIA<br><br>LAMPS: PHILIPS | AFST-3-32-MVOLT-GEB10PS<br>APPROVED EQUAL<br><br>F32T8<br>APPROVED EQUAL | FLUORESCENT T8 | 3 | 32 W | 96 W | 8550 | 4100 K | 120V | PENDANT | INTERNAL FUSING<br>PROVIDE WIRE GUARD |

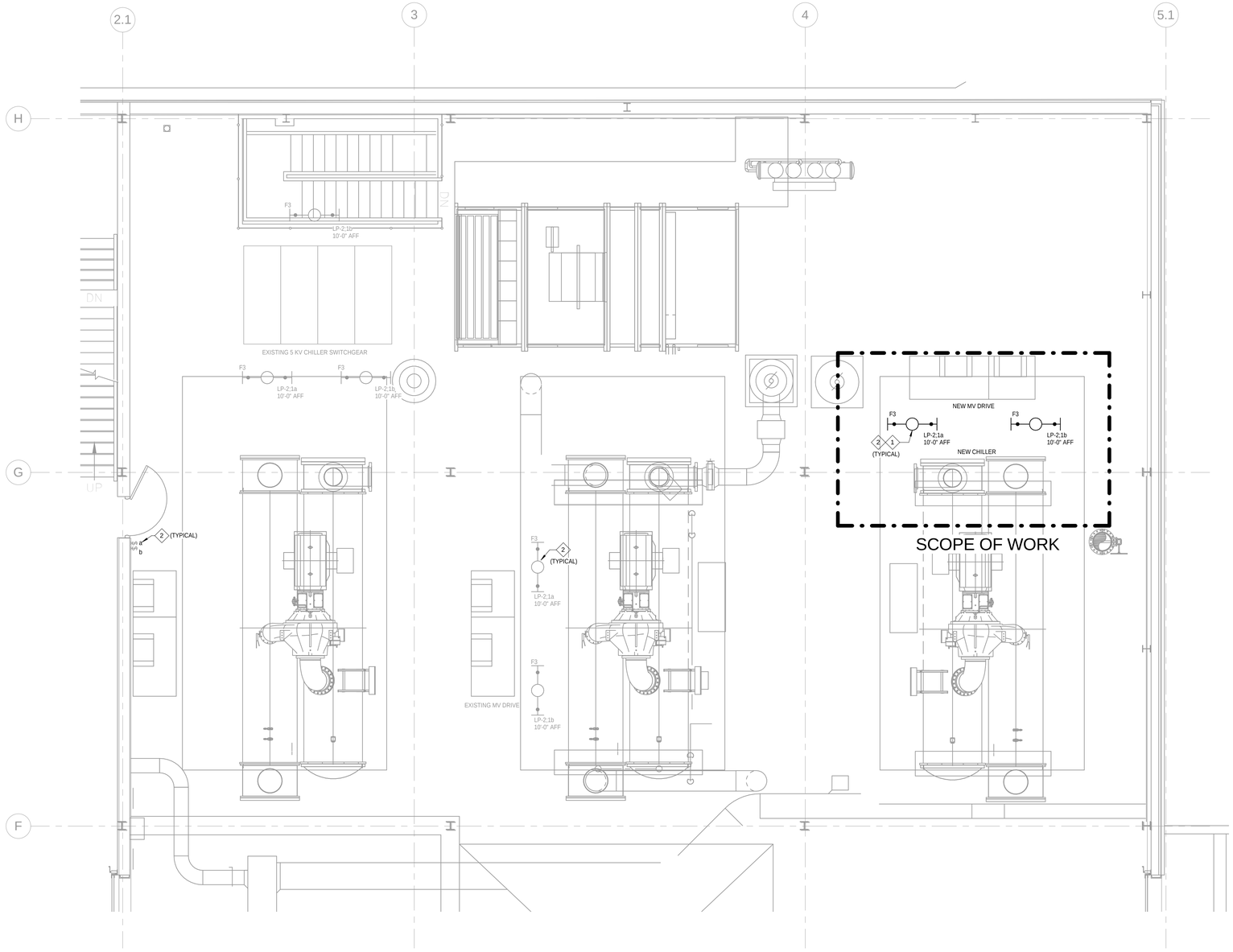


1 **ELECTRICAL LIGHTING PLAN - FIRST FLOOR CUP BUILDING**
SCALE: 1/4" = 1'-0"

## GENERAL NOTES

1. CIRCUITS TO EXISTING PANELBOARDS ARE SHOWN FOR DESIGN INTENT ONLY. FIELD VERIFY EXISTING CONDITIONS TO DETERMINE CIRCUIT NUMBERS AND PANELBOARD AVAILABLE TO SERVE NEW LOADS.
2. NORMAL LIGHT FIXTURES TO BE CIRCUITED TO EXISTING 208/120V BRANCH CIRCUIT PANEL SERVING LIGHTING IN EXISTING CHILLER AREA, LOCATED IN CUP BUILDING. REFER TO SHEET E201.8 FOR PANEL LOCATION.
3. COORDINATE ANY CONDUIT ROUTING OVER MECHANICAL EQUIPMENT WITH RIGGING CONTRACTOR TO AVOID INTERFERENCE WITH INSTALLATION AND FUTURE REMOVAL OF EQUIPMENT.

## KEYED NOTES

1 PROVIDE NEW LIGHTING FIXTURE FOR ILLUMINATION OF EQUIPMENT WORKING CLEARANCES, CIRCUITED TO EXISTING PANELBOARD SERVING LIGHTING IN CHILLER AREA.

2 EXTEND EXISTING BRANCH CIRCUIT AND SWITCH LEGS SERVING LIGHT FIXTURES AT CHILLER #5 MV DRIVE TO NEW LIGHT FIXTURES AT CHILLER #6 MV DRIVE. PROVIDE NEW CONDUIT, CONDUCTORS, AND SUPPORTS AS REQUIRED.


CHAMPLIN
ARCHITECTURE

720 E Pete Rose Way, Suite 140
Cincinnati, OH 45202
T 513.241.4474 F 513.241.0081
thinkchamplin.com

THINK CREATE REALIZE

AEI Affiliated Engineers

THP


UNIVERSITY OF KENTUCKY

**CAMPUS INFRASTRUCTURE & C.U.P.**

BID PACKAGE 8

University of Kentucky

LEXINGTON, KENTUCKY

**ISSUANCES**

| No. | Description | Date |
|---|---|---|
| 1 | Issued for Bid and Permit | 01/12/18 |

| | |
|---|---|
| Drawn By TU | STATE OF KENTUCKY ANDREW SCHANTZ 20663 LICENSED PROFESSIONAL ENGINEER 1/10/18 Exp: 6/30/18 |
| Checked By AS | |
| Client Number 514 | |
| Project Number 5601 | |

ELECTRICAL LIGHTING PLAN CUP BUILDING FIRST FLOOR

E101.8

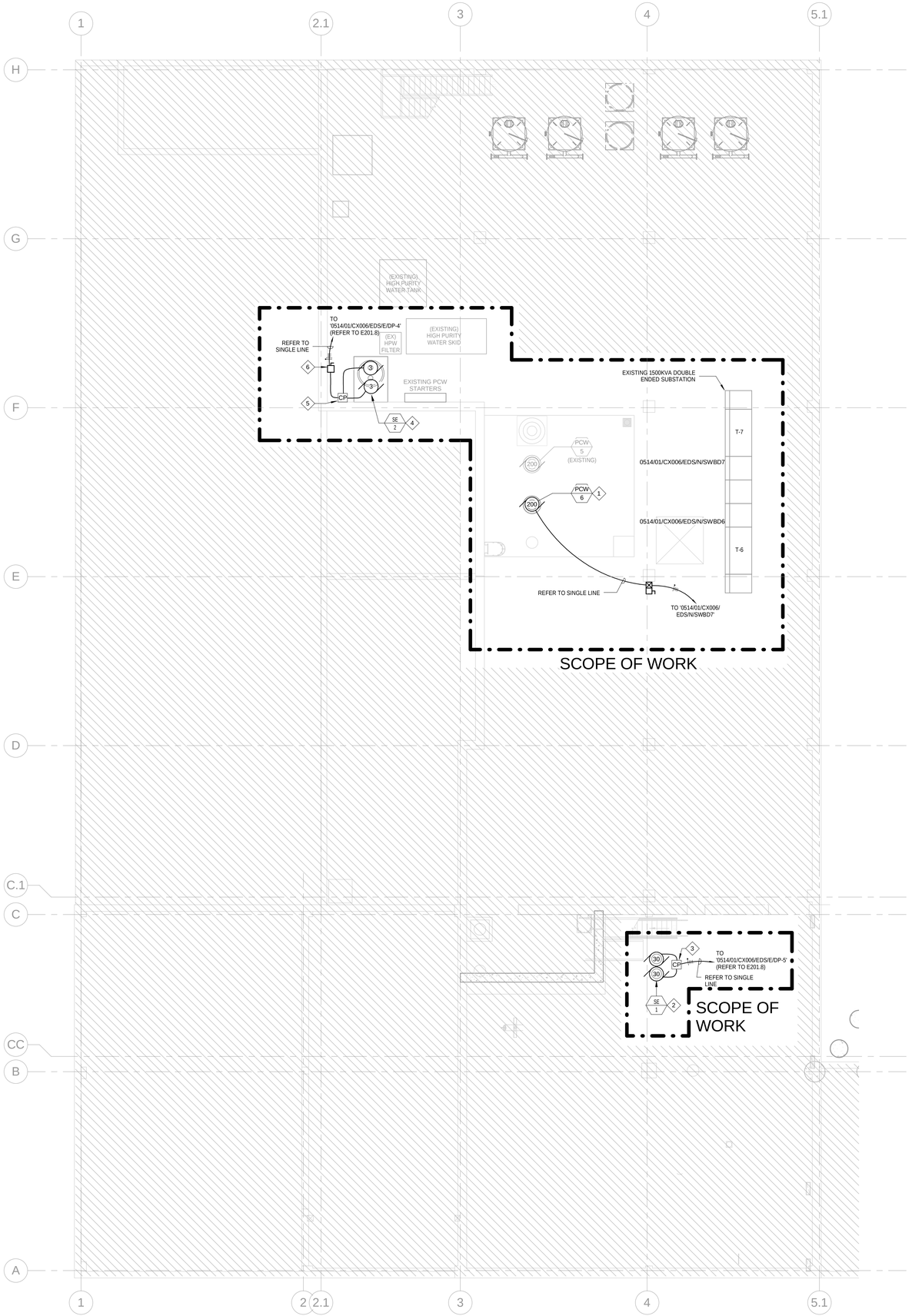


**1** **ELECTRICAL POWER PLAN - BASEMENT CUP BUILDING**
SCALE: 1/8" = 1'-0"

## GENERAL NOTES

1. PROVIDE A 3.5" CONCRETE HOUSEKEEPING PAD FOR ALL FLOOR MOUNTED ELECTRICAL EQUIPMENT.

## KEYED NOTES

1 NEW CONDENSER WATER PUMP
2 NEW DUPLEX SEWAGE EJECTION PUMP SYSTEM.
3 CONTROL PANEL BY DIV. 22 WITH INTEGRAL DISCONNECT AND MOTOR STARTERS.
4 EXISTING (2) 1.5 HP SEWAGE EJECTION PUMP SYSTEM TO BE REPLACED WITH NEW SEWAGE EJECTION PUMP SYSTEM 'SE-2'.
5 EXISTING CONTROL PANEL TO REMAIN AND BE RE-USED TO SERVE 'SE-2'.
6 EXISTING DISCONNECT TO REMAIN AND BE RE-USED TO SERVE 'SE-2'.

CHAMPLIN ARCHITECTURE
720 E Pete Rose Way, Suite 140
Cincinnati, OH 45202
T 513.241.4474 F 513.241.0081
thinkchamplin.com
THINK CREATE REALIZE

Affiliated Engineers

THP

UNIVERSITY OF KENTUCKY

**CAMPUS INFRASTRUCTURE & C.U.P.**

BID PACKAGE 8

University of Kentucky

LEXINGTON, KENTUCKY

**ISSUANCES**

| No. | Description | Date |
|---|---|---|
| 1 | Issued for Bid and Permit | 01/12/18 |

| | |
|---|---|
| Drawn By TU | STATE OF KENTUCKY ANDREW SCHMITZ 25353 LICENSED PROFESSIONAL ENGINEER 1/10/18 EXP: 6/30/18 |
| Checked By AS | |
| Client Number 514 | |
| Project Number 5601 | |

ELECTRICAL POWER PLAN CUP BUILDING BASEMENT

E200.8

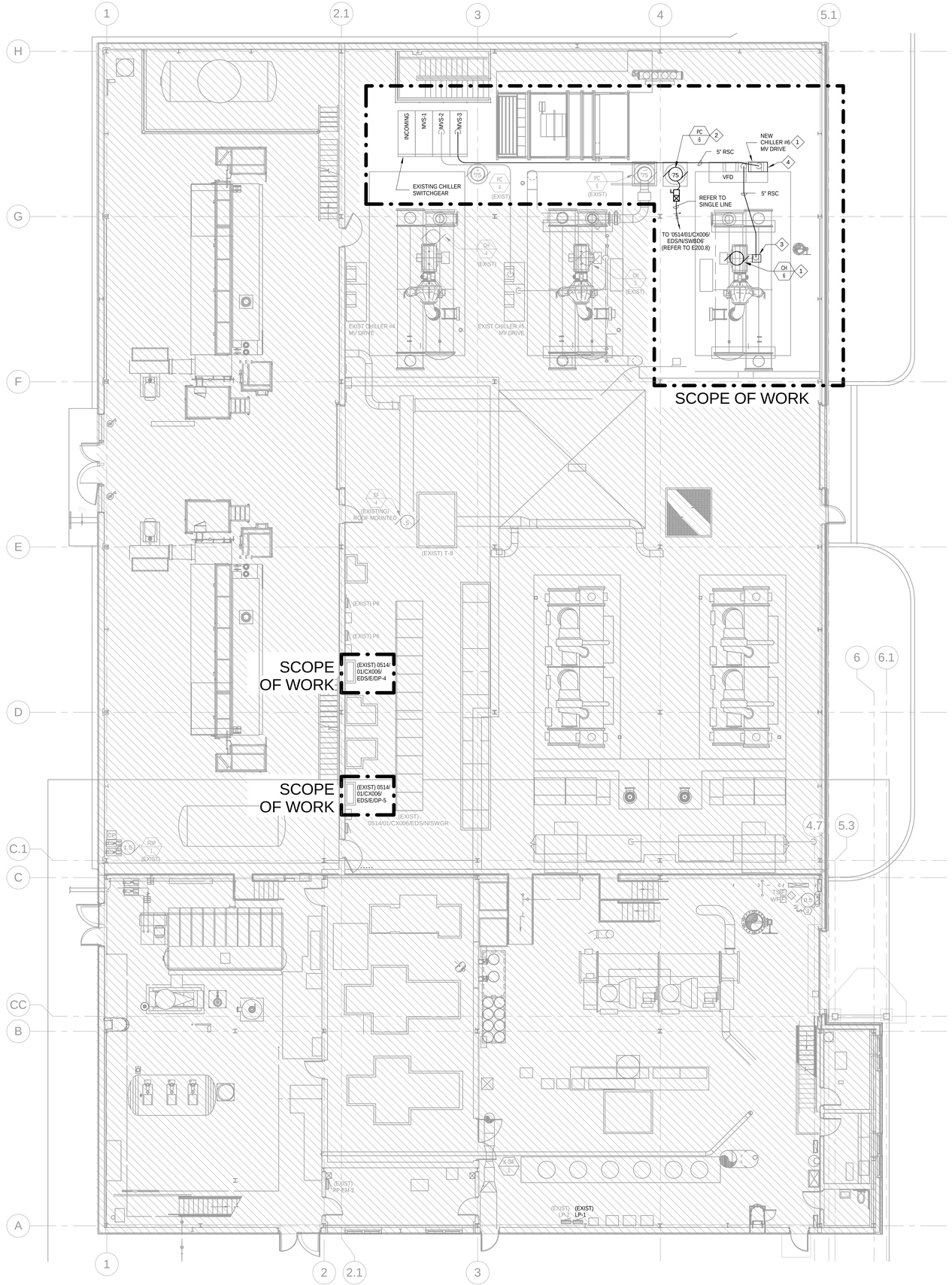


1 ELECTRICAL POWER PLAN - CUP BUILDING FIRST FLOOR

SCALE: 1/8" = 1'-0"

## GENERAL NOTES

1. PROVIDE A 3.5" CONCRETE HOUSEKEEPING PAD FOR ALL FLOOR MOUNTED ELECTRICAL EQUIPMENT.
2. DO NOT ROUTE CONDUIT DIRECTLY OVER MECHANICAL EQUIPMENT, FOR RIGGING PURPOSES.

## KEYED NOTES

1. NEW CHILLER AND ASSOCIATED MEDIUM VOLTAGE DRIVE.
2. NEW CHILLED WATER PUMP
3. PROVIDE A JUNCTION BOX EXTENSION ON CHILLER TERMINATION BOX TO ACCOMODATE SPACE FOR INCOMING 5KV CABLES AND TERMINATIONS. PAINT JUNCTION BOX EXTENSION TO MATCH CHILLER. MATCH EXISTING CHILLER #4 & #5 INSTALLATION.
4. PROVIDE A JUNCTION BOX AND BUS EXTENSION ON LINE SIDE OF MV DRIVE TO ACCOMODATE INCOMING 5KV CABLES AND TERMINATIONS. MATCH EXISTING CHILLER #4 & #5 INSTALLATION.


CHAMPLIN ARCHITECTURE

720 E Pete Rose Way, Suite 140
Cincinnati, OH 45202
T 513.241.4474 F 513.241.0081
thinkchamplin.com

THINK CREATE REALIZE

AEI Affiliated Engineers

THP


UNIVERSITY OF KENTUCKY

**CAMPUS INFRASTRUCTURE & C.U.P.**

BID PACKAGE 8

University of Kentucky

LEXINGTON, KENTUCKY

**ISSUANCES**

| No. | Description | Date |
|---|---|---|
| 1 | Issued for Bid and Permit | 01/12/18 |

| | |
|---|---|
| Drawn By | TU |
| Checked By | AS |
| Client Number | 514 |
| Project Number | 5601 |

STATE OF KENTUCKY ANDREW SCHANTZ 20663 LICENSED PROFESSIONAL ENGINEER 1/10/18 EXP: 6/30/18

ELECTRICAL POWER PLAN CUP BUILDING FIRST FLOOR

E201.8

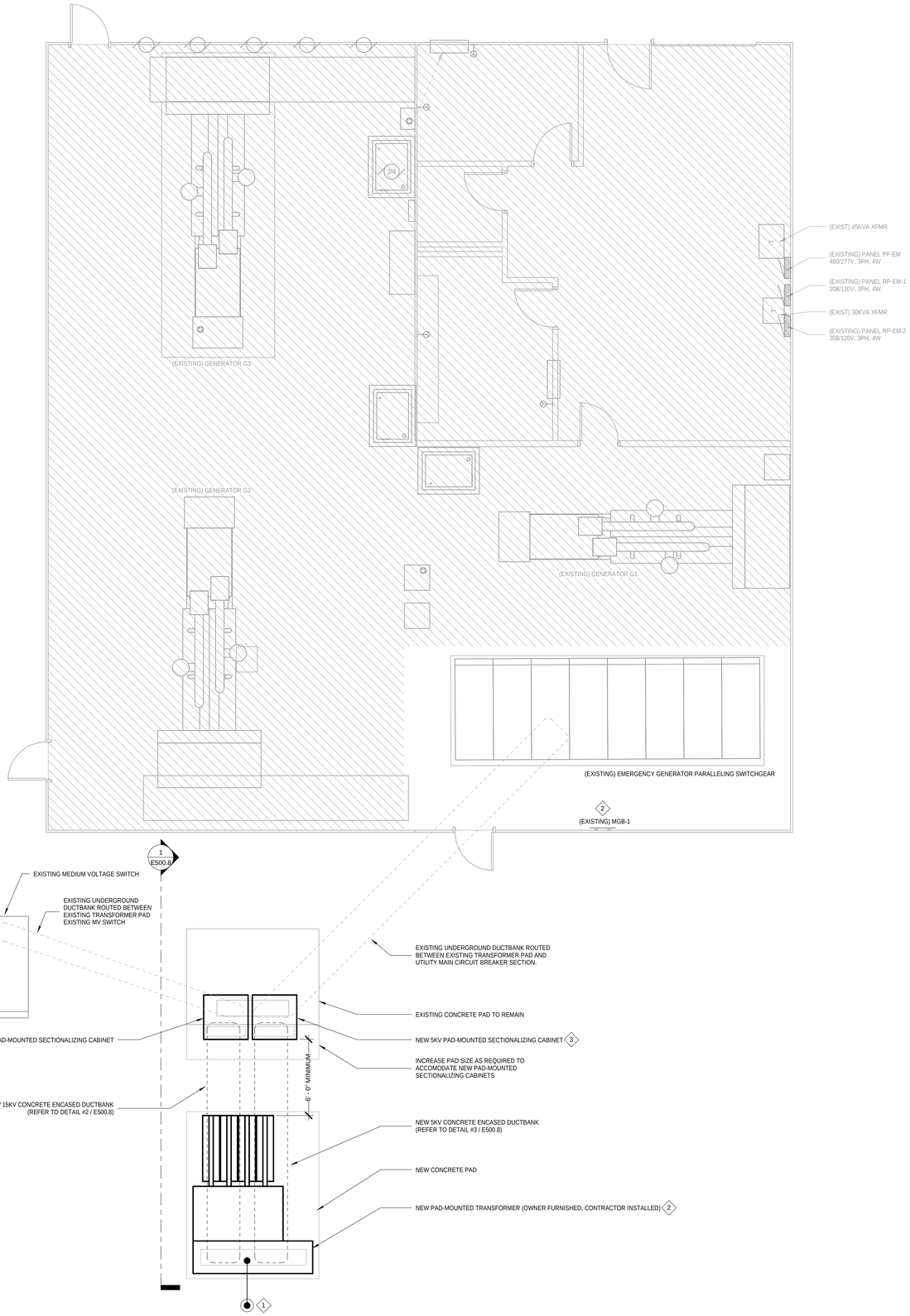





## 1 ELECTRICAL POWER PLAN - GENERATOR BUILDING

SCALE: 1/4" = 1'-0"

## GENERAL NOTES

1. COORDINATE EXACT EQUIPMENT PAD DIMENSIONS WITH FINAL EQUIPMENT SIZES PRIOR TO INSTALLATION. NEW ELECTRICAL EQUIPMENT PADS SHALL BE 4" THICK.
2. CONTRACTOR IS RESPONSIBLE FOR A COMPLETE INSTALLATION OF OWNER-FURNISHED PAD-MOUNTED TRANSFORMER.

## KEYED NOTES

1 PROVIDE 3/4" X 10' GROUND ROD, WITH TOP OF ELECTRODE 24" BELOW GRADE. PROVIDE #4/0 BARE COPPER CONDUCTOR DIRECT BURIED 24" BELOW GRADE TO CONNECT TO NEW PAD-MOUNTED TRANSFORMER.

2 PROVIDE #4/0 BARE COPPER GROUND CONDUCTOR FROM NEW PAD-MOUNTED TRANSFORMER TO EXISTING ELECTRICAL GROUND BAR 'MGB-1'. CONDUCTOR TO BE DIRECT BURIED 24" BELOW GRADE OUTDOORS, AND ROUTED OVERHEAD IN 1-1/2"C INDOORS.

3 COORDINATE EXACT PLACEMENT OF NEW SECTIONALIZER CABINET WITH EXISTING DUCT BANK STUB UP LOCATIONS.

CHAMPLIN ARCHITECTURE
720 E Pete Rose Way, Suite 140
Cincinnati, OH 45202
T 513.241.4474 F 513.241.0081
thinkchamplin.com
THINK CREATE REALIZE

Affiliated Engineers

THP

UNIVERSITY OF KENTUCKY

# CAMPUS INFRASTRUCTURE & C.U.P.

BID PACKAGE 8

University of Kentucky

LEXINGTON, KENTUCKY

### ISSUANCES

| No. | Description | Date |
|---|---|---|
| 1 | Issued for Bid and Permit | 01/12/18 |

| | |
|---|---|
| Drawn By: Author | |
| Checked By: Checker | |
| Client Number: 514 | |
| Project Number: 5601 | |

STATE OF KENTUCKY ANDREW SCHMITZ 25963 LICENSED PROFESSIONAL ENGINEER
1/10/18 Exp: 6/30/18

ELECTRICAL POWER PLAN GENERATOR BUILDING

E201G.8

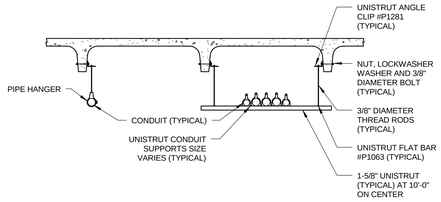


## 4 CABLE AND CONDUIT HANGERS
NOT TO SCALE

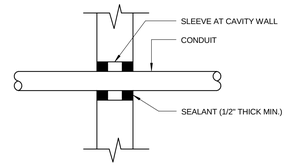


**CONDUIT**

## 1 PENETRATION THRU NON-RATED INTERIOR WALL
NOT TO SCALE

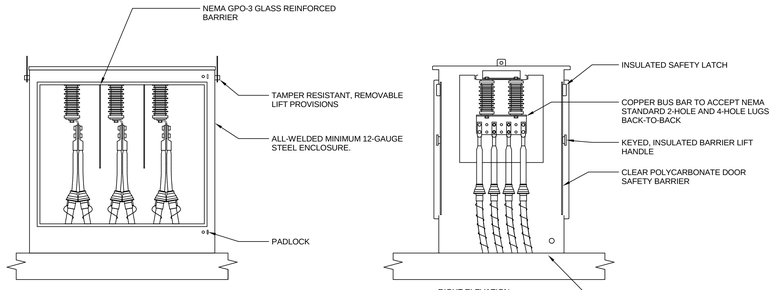


CONSTRUCTION SPECIFICATIONS:

1. UL LISTED
2. COMPLIANT WITH IEEE C57.12.18 - STANDARD FOR PAD-MOUNTED EQUIPMENT ENCLOSURE INTEGRITY
3. ACCEPTABLE MANUFACTURERS: ELLIOT INDUSTRIES, EATON COOPER POWER, G&W
4. SUBMIT SHOP DRAWINGS FOR EQUIPMENT FOR APPROVAL.
   - 4.1. EQUIPMENT RATINGS
   - 4.2. ENCLOSURE DIMENSIONS AND LOCATION OF COMPONENTS
   - 4.3. PROPOSED CABLE-TRAINING LAYOUT AND DIMENSIONS
5. VOLTAGE: 12.47KV, 3PH, 3W, 95KV BIL
6. CONTINUOUS CURRENT RATING: 600A
7. FINISH: OLIVE GREEN, ANSI MUNSELL 7GY3.29/1.5 FINISH
8. BUS MATERIAL: COPPER
9. PROVIDE ADEQUATE DEPTH FOR BUSHINGS RATED 600 A CONTINUOUS TO ACCOMMODATE TWO 600 A ELBOWS MOUNTED PIGGYBACK, ENCAPSULATED SURGE ARRESTERS OR GROUNDING ELBOWS MOUNTED ON 600 A ELBOWS.
10. PROVIDE GROUND BUS, BOLTED TO COPPER-CLAD STEEL BRACKET WELDED TO STEEL ENCLOSURE, SIZED TO ACCOMMODATE NO #2 THROUGH #500 KCMIL CONDUCTORS.
11. INSTALL COMPONENTS AS INDICATED AND IN ACCORDANCE WITH MANUFACTURER'S INSTRUCTIONS AND RECOMMENDATIONS.
12. COORDINATE EXACT LOCATION OF EQUIPMENT WITH EXISTING CONDUIT STUB LOCATIONS.
13. NEW CONDUIT STUBS INTO PAD ARE TO BE MADE WITH GRSC. SPACE CONDUITS TO ALLOW ACCESS TO CONDUIT FITTINGS AND GROUND BUSHINGS.

## 5 5KV SECTIONALIZING CABINET
NOT TO SCALE

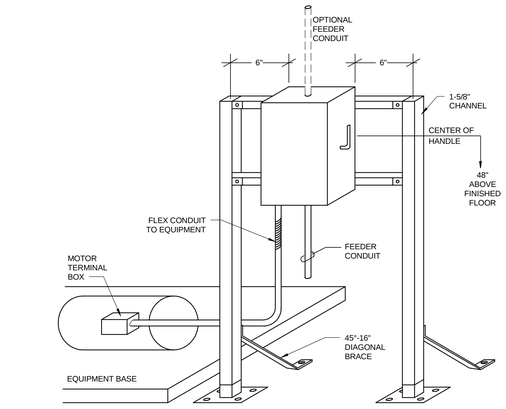


## 2 FREE STANDING MOTOR DISCONNECT DETAIL
NOT TO SCALE

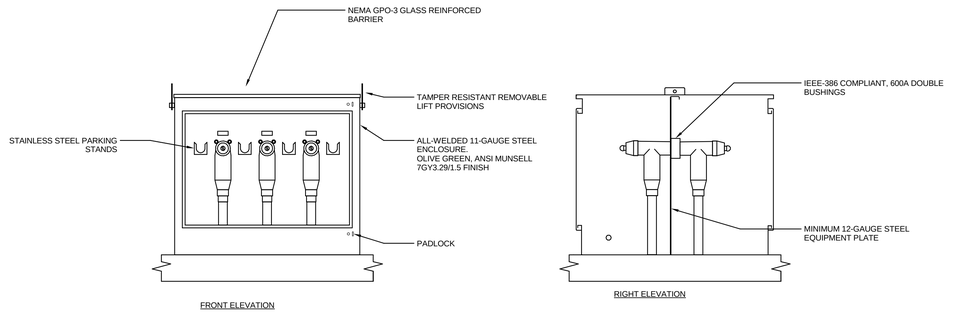


CONSTRUCTION SPECIFICATIONS:

1. UL LISTED
2. COMPLIANT WITH IEEE C57.12.18 - STANDARD FOR PAD-MOUNTED EQUIPMENT ENCLOSURE INTEGRITY
3. ACCEPTABLE MANUFACTURERS: ELLIOT INDUSTRIES, EATON COOPER POWER, G&W
4. SUBMIT SHOP DRAWINGS FOR EQUIPMENT FOR APPROVAL.
   - 4.1. EQUIPMENT RATINGS
   - 4.2. ENCLOSURE DIMENSIONS AND LOCATION OF COMPONENTS
   - 4.3. PROPOSED CABLE-TRAINING LAYOUT AND DIMENSIONS
5. VOLTAGE: 12.47KV, 3PH, 3W, 95KV BIL
6. CONTINUOUS CURRENT RATING: 600A
7. FINISH: OLIVE GREEN, ANSI MUNSELL 7GY3.29/1.5 FINISH
8. BUS MATERIAL: COPPER
9. PROVIDE GROUND BUS, BOLTED TO COPPER-CLAD STEEL BRACKET WELDED TO STEEL ENCLOSURE, SIZED TO ACCOMMODATE NO #2 THROUGH #500 KCMIL CONDUCTORS.
10. INSTALL COMPONENTS AS INDICATED AND IN ACCORDANCE WITH MANUFACTURER'S INSTRUCTIONS AND RECOMMENDATIONS.
11. COORDINATE EXACT LOCATION OF EQUIPMENT WITH EXISTING CONDUIT STUB LOCATIONS.
12. NEW CONDUIT STUBS INTO PAD ARE TO BE MADE WITH GRSC. SPACE CONDUITS TO ALLOW ACCESS TO CONDUIT FITTINGS AND GROUND BUSHINGS.

## 6 15KV SECTIONALIZING CABINET
NOT TO SCALE

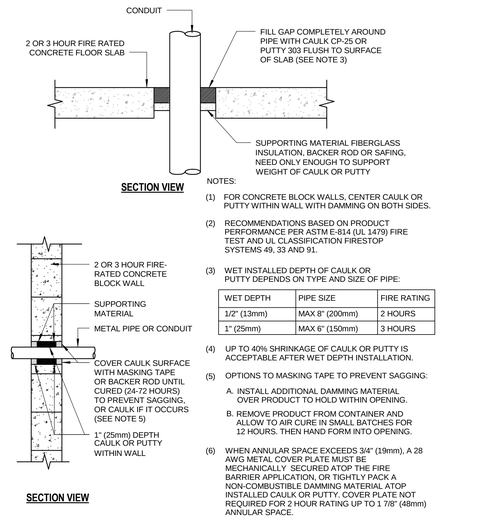


NOTES:

(1) FOR CONCRETE BLOCK WALLS, CENTER CAULK OR PUTTY WITHIN WALL WITH DAMMING ON BOTH SIDES.

(2) RECOMMENDATIONS BASED ON PRODUCT PERFORMANCE PER ASTM E-814 (UL 1479) FIRE TEST AND UL CLASSIFICATION FIRESTOP SYSTEMS 49, 33 AND 91.

(3) WET INSTALLED DEPTH OF CAULK OR PUTTY DEPENDS ON TYPE AND SIZE OF PIPE:

| WET DEPTH | PIPE SIZE | FIRE RATING |
|---|---|---|
| 1/2" (13mm) | MAX 8" (200mm) | 2 HOURS |
| 1" (25mm) | MAX 6" (150mm) | 3 HOURS |

(4) UP TO 40% SHRINKAGE OF CAULK OR PUTTY IS ACCEPTABLE AFTER WET DEPTH INSTALLATION.

(5) OPTIONS TO MASKING TAPE TO PREVENT SAGGING:

A. INSTALL ADDITIONAL DAMMING MATERIAL OVER PRODUCT TO HOLD WITHIN OPENING.

B. REMOVE PRODUCT FROM CONTAINER AND ALLOW TO AIR CURE IN SMALL BATCHES FOR 12 HOURS. THEN HAND FORM INTO OPENING.

(6) WHEN ANNULAR SPACE EXCEEDS 3/4" (19mm), A 28 AWG METAL COVER PLATE MUST BE MECHANICALLY SECURED ATOP THE FIRE BARRIER APPLICATION, OR TIGHTLY PACK A NON-COMBUSTIBLE DAMMING MATERIAL ATOP INSTALLED CAULK OR PUTTY. COVER PLATE NOT REQUIRED FOR 2 HOUR RATING UP TO 1 7/8" (48mm) ANNULAR SPACE.

## 3 SING. COND. PENETRATION OF 2 OR 3 HR FIRE RATED GYP. WALLBOARD WALL
NOT TO SCALE

CHAMPLIN ARCHITECTURE
720 E Pete Rose Way, Suite 140
Cincinnati, OH 45202
T 513.241.4474 F 513.241.0081
thinkchamplin.com
THINK CREATE REALIZE

Affiliated Engineers

THP

UNIVERSITY OF KENTUCKY®

**CAMPUS INFRASTRUCTURE & C.U.P.**

BID PACKAGE 8

University of Kentucky

LEXINGTON, KENTUCKY

**ISSUANCES**

| No. | Description | Date |
|---|---|---|
| 1 | Issued for Bid and Permit | 01/12/18 |

| | |
|---|---|
| Drawn By | TU |
| Checked By | AS |
| Client Number | 514 |
| Project Number | 5601 |

STATE OF KENTUCKY ANDREW SCHMITZ 25553 LICENSED PROFESSIONAL ENGINEER 1/10/18 Exp: 6/30/18

ELECTRICAL DETAILS

E400.8

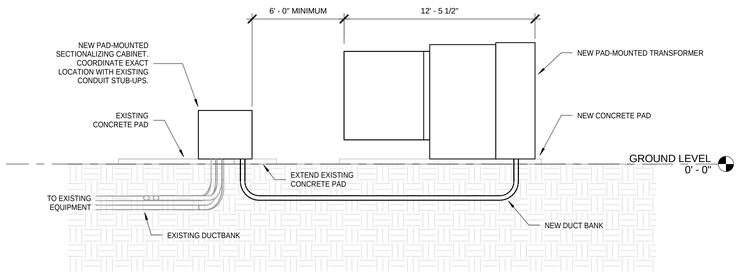


1 **DUCT BANK SECTION**
SCALE: 1/4" = 1'-0"

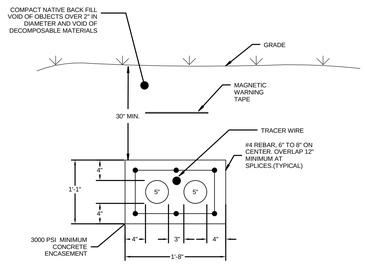


NOTE:
1. UNDERGROUND CONDUIT SHALL BE PVC SCHEDULE 40.
2. PROVIDE NON-METALLIC CONDUIT SPACERS TO ENSURE PROPER SEPERATION BETWEEN CONDUITS. SPACERS SHALL BE SPACED TO AVOID SAGGING OF CONDUIT.
3. PROVIDE PULL ROPES IN SPARE CONDUITS. CAP, SEAL, AND LABEL CONDUIT AT BOTH ENDS.
4. PROVIDE #4 REBAR REINFORCEMENT TIES 16" ON CENTER.

2 15KV DUCT BANK DETAIL
NOT TO SCALE

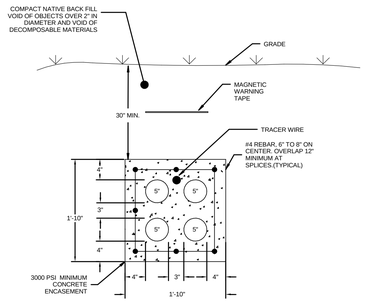


NOTE:
1. UNDERGROUND CONDUIT SHALL BE PVC SCHEDULE 40.
2. PROVIDE NON-METALLIC CONDUIT SPACERS TO ENSURE PROPER SEPERATION BETWEEN CONDUITS. SPACERS SHALL BE SPACED TO AVOID SAGGING OF CONDUIT.
3. PROVIDE PULL ROPES IN SPARE CONDUITS. CAP, SEAL, AND LABEL CONDUIT AT BOTH ENDS.
4. PROVIDE #4 REBAR REINFORCEMENT TIES 16" ON CENTER.

3 5KV DUCTBANK DETAIL
NOT TO SCALE

CHAMPLIN
ARCHITECTURE

720 E Pete Rose Way, Suite 140
Cincinnati, OH 45202
T 513.241.4474 F 513.241.0081
thinkchamplin.com

THINK CREATE REALIZE

AEI Affiliated Engineers

THP

UNIVERSITY OF KENTUCKY

**CAMPUS INFRASTRUCTURE & C.U.P.**

BID PACKAGE 8

University of Kentucky

LEXINGTON, KENTUCKY

**ISSUANCES**

| No. | Description | Date |
|---|---|---|
| 1 | Issued for Bid and Permit | 01/12/18 |

**Drawn By** Author
**Checked By** Checker
**Client Number** 514
**Project Number** 5601

STATE OF KENTUCKY ANDREW SCHARTZ 20863 LICENSED PROFESSIONAL ENGINEER
1/10/18 EXP: 6/30/18

ELECTRICAL SECTIONS

E500.8

## LINETYPE LEGEND

- EXISTING
- NEW
- FUTURE / N.I.C.

## GENERAL NOTES

1. CONTRACTOR MUST OBTAIN PERMISSION FROM UNIVERSITY OF KENTUCKY TO SHUT OFF SERVICES OR SYSTEMS, WHICH MAY AFFECT OTHER AREAS BEYOND THE LIMITS OF THE AREA OF WORK. SUCH PERMISSION WILL BE GRANTED ONLY AFTER UNIVERSITY OF KENTUCKY IS INFORMED AS TO THE REASON FOR AND DURATION OF THE SHUTDOWN AND IS SATISFIED THAT THE SHUTDOWN CAN BE MADE WITH AS LITTLE INCONVENIENCE TO OTHER AREAS AS POSSIBLE.
2. FURNISH FUEL AS REQUIRED FOR EXISTING GENERATOR SYSTEM IN ORDER TO MINIMIZE DOWNTIME OF EMERGENCY DISTRIBUTION SWITCHGEAR DURING TRANSFORMER REPLACEMENT.

## KEYED NOTES (X)

1. USE EXISTING SPARE CIRCUIT BREAKERS IN EXISTING SUBSTATION TO FEED NEW MECHANICAL EQUIPMENT. TEST CIRCUIT BREAKER PRIOR TO INSTALLATION. ADJUST CIRCUIT BREAKER LONG TIME TRIP SETTING AS SHOWN.
2. FURNISHED BY DIVISION 23, INSTALLED BY ELECTRICAL CONTRACTOR.
3. PROVIDE COMBINATION SOLID-STATE REDUCED-VOLTAGE STARTER / FUSED DISCONNECT. REFER TO SPECIFICATION 262913 FOR ADDITIONAL REQUIREMENTS.
4. PROVIDE NEW EATON CUTLER-HAMMER 'HFDE' TYPE, 65 KAIC CIRCUIT BREAKER, AND ADJUST CIRCUIT BREAKER LONG TIME TRIP SETTING AS SHOWN.
5. SEWAGE EJECTOR PUMPS AND CONTROL PANEL ARE TO BE A PACKAGED SYSTEM WITH A SINGLE POINT OF CONNECTION. CONTROL PANEL BY DIV. 22 WITH INTEGRAL DISCONNECT AND MOTOR STARTERS.
6. PROVIDE A NEW GE 'RECORD PLUS' TYPE CIRCUIT BREAKER IN EXISTING PREPARED SPACE.
7. EXISTING (2) 1.5 HP SEWAGE EJECTION PUMP SYSTEM TO BE REPLACED WITH NEW SEWAGE EJECTION PUMP SYSTEM 'SE-2'.
8. EXISTING CONTROL PANEL AND DISCONNECT TO REMAIN AND BE RE-USED TO SERVE 'SE-2'.
9. RE-USE EXISTING BRANCH CIRCUIT AND WIRE COMPLETE.
10. REPLACE EXISTING 15A, 3P CIRCUIT BREAKER SERVING EXISTING SEWAGE EJECTION PUMPS TO BE REPLACED, WITH A NEW 20A, 3P GE 'RECORD PLUS' TYPE CIRCUIT BREAKER TO SERVE 'SE-2'.
11. PAD-MOUNT TRANSFORMER IS OWNER FURNISHED, CONTRACTOR INSTALLED.
12. RE-USE EXISTING CABLES SERVING EXISTING TRANSFORMER TO CONNECT TO NEW PAD-MOUNT SECTIONALIZING CABINET. FIELD VERIFY CONDITION OF EXISTING CABLES AND TEST PRIOR TO INSTALLATION OF NEW SECTIONALIZING CABINETS. PROVIDE AN ALLOWANCE TO REPLACE EXISTING FEEDER, SIZED AS SHOWN ON SINGLE LINE, IN THE EVENT EXISTING CABLES ARE NOT ADEQUETE FOR THIS INSTALLATION.
13. TERMINATE EXISTING SPARE CABLES ON UTILITY MAIN BREAKER LUGS.
14. TEST EXISTING UTILITY MAIN CIRCUIT BREAKER AND PROGRAM RELAY SETTINGS TO ACCOMODATE NEW PAD-MOUNTED TRANSFORMER.
15. PROGRAM EXISTING DIFFERENTIAL RELAY TO ACCOMODATE NEW PAD-MOUNTED TRANSFORMER.
16. PROVIDE NEW TERMINATIONS OF EXISTING CABLES AS REQUIRED TO TERMINATE ON NEW SECTIONALIZER CABINET.
17. REFER TO DETAIL #5 / E400.8 FOR 5KV SECTIONALIZING CABINET DETAIL.
18. REFER TO DETAIL #6 / E400.8 FOR 15KV SECTIONALIZING CABINET DETAIL.
19. PROVIDE BOTH SECTIONALIZING CABINETS OF THE SAME MANUFACTURER (ACCEPTABLE MANUFACTURERS: ELLIOT INDUSTRIES, EATON COOPER POWER, G&W).


CHAMPLIN ARCHITECTURE
720 E Pete Rose Way, Suite 140
Cincinnati, OH 45202
T 513.241.4474 F 513.241.0081
thinkchamplin.com
THINK CREATE REALIZE

Affiliated Engineers

THP


UNIVERSITY OF KENTUCKY

# CAMPUS INFRASTRUCTURE & C.U.P.

BID PACKAGE 8

University of Kentucky

LEXINGTON, KENTUCKY

### ISSUANCES

| No. | Description | Date |
|---|---|---|
| 1 | Issued for Bid and Permit | 01/12/18 |

| | |
|---|---|
| Drawn By | TU |
| Checked By | AS |
| Client Number | 514 |
| Project Number | 5601 |

STATE OF KENTUCKY — ANDREW SCHWARTZ — 25563 — LICENSED PROFESSIONAL ENGINEER — 1/10/18 — Exp: 6/30/18

ELECTRICAL SINGLE LINE DIAGRAM

E700.8

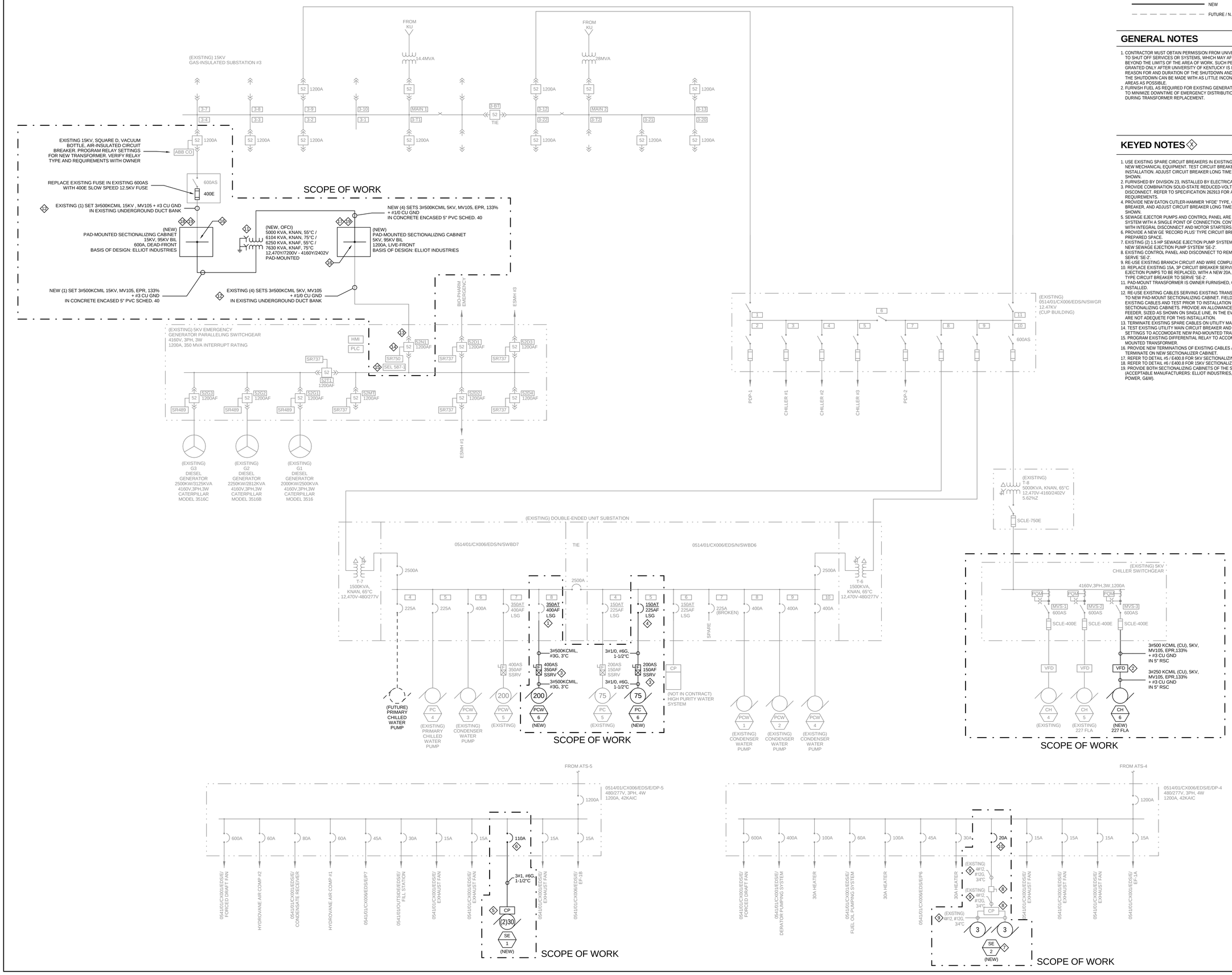

## GENERAL NOTES

1. COORDINATE EXACT EQUIPMENT PAD DIMENSIONS WITH FINAL EQUIPMENT SIZES PRIOR TO INSTALLATION. NEW ELECTRICAL EQUIPMENT PADS SHALL BE 4" THICK.
2. CONTRACTOR MUST OBTAIN PERMISSION FROM UNIVERSITY OF KENTUCKY TO SHUT OFF SERVICES OR SYSTEMS, WHICH MAY AFFECT OTHER AREAS BEYOND THE LIMITS OF THE AREA OF WORK. SUCH PERMISSION WILL BE GRANTED ONLY AFTER UNIVERSITY OF KENTUCKY IS INFORMED AS TO THE REASON FOR AND DURATION OF THE SHUTDOWN AND IS SATISFIED THAT THE SHUTDOWN CAN BE MADE WITH AS LITTLE INCONVENIENCE TO OTHER AREAS AS POSSIBLE.
3. EXISTING DUCTBANKS ARE SHOWN FOR REFERENCE ONLY.

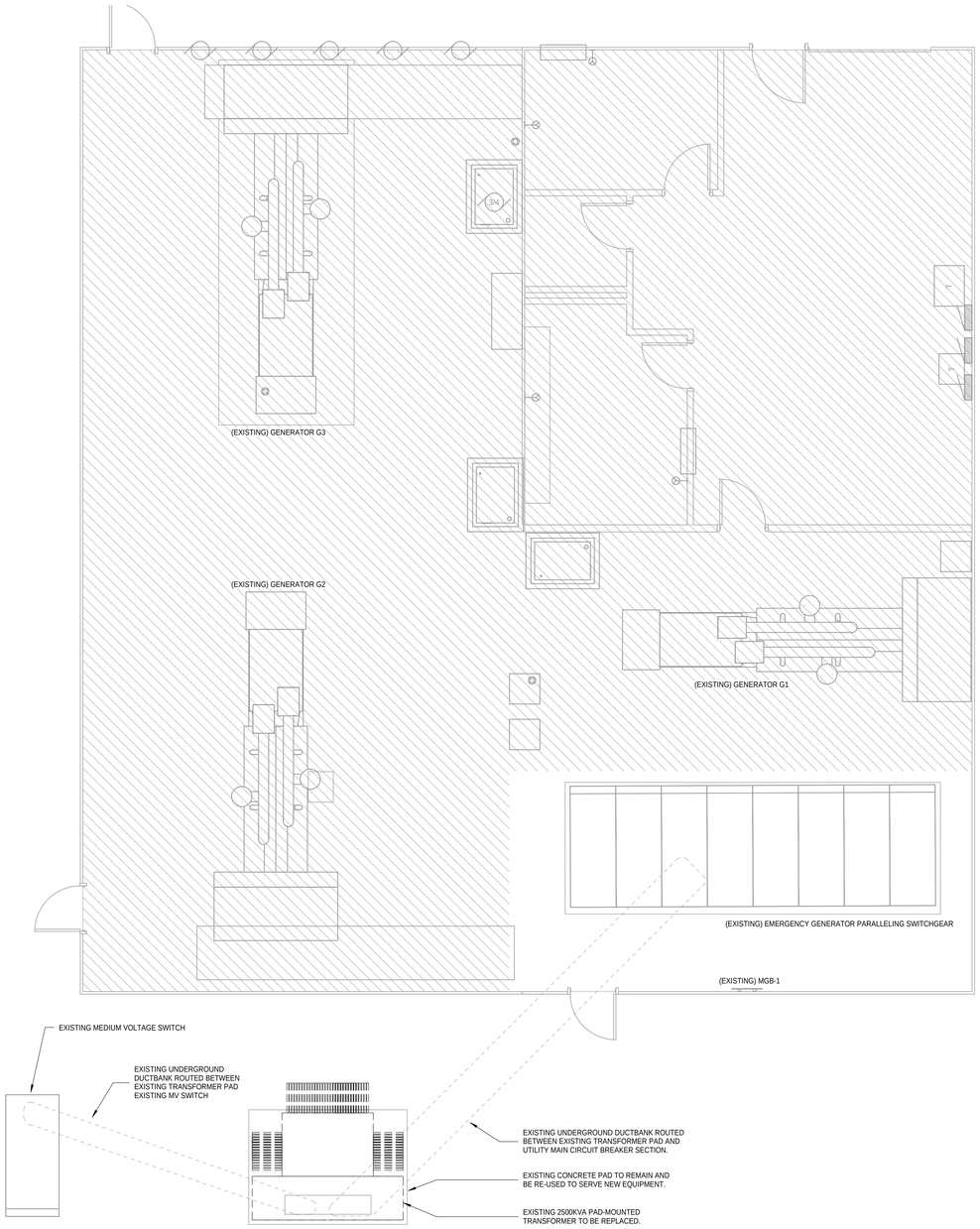


1 **ELECTRICAL DEMOLITION PLAN - GENERATOR BUILDING**
SCALE: 1/4" = 1'-0"

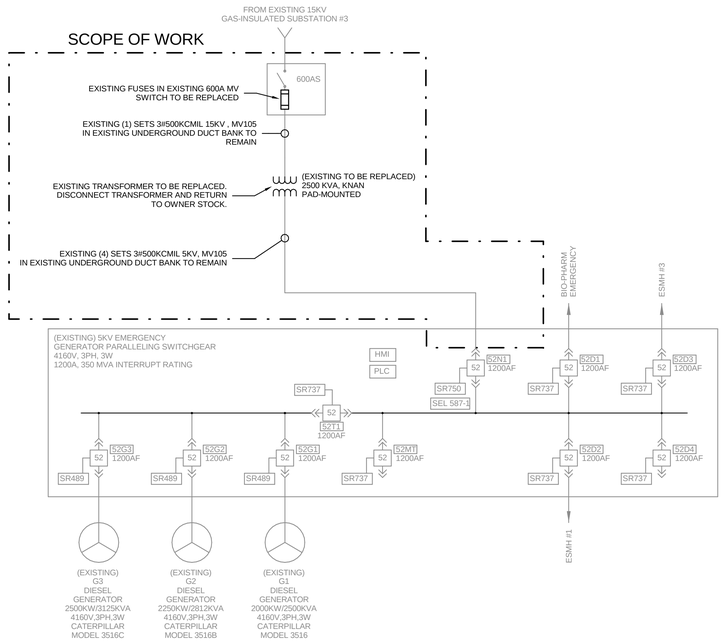


2 **ELECTRICAL PARTIAL DEMOLITION SINGLE LINE DIAGRAM**
SCALE: NO SCALE


CHAMPLIN ARCHITECTURE
720 E Pete Rose Way, Suite 140
Cincinnati, OH 45202
T 513.241.4474 F 513.241.0081
thinkchamplin.com
THINK CREATE REALIZE


AEI Affiliated Engineers

THP

UNIVERSITY OF KENTUCKY

**CAMPUS INFRASTRUCTURE & C.U.P.**

BID PACKAGE 8

University of Kentucky

LEXINGTON, KENTUCKY

**ISSUANCES**

| No. | Description | Date |
|---|---|---|
| 1 | Issued for Bid and Permit | 01/12/18 |

Drawn By: Author
Checked By: Checker
Client Number: 514
Project Number: 5601

STATE OF KENTUCKY ANDREW SCHARTZ 20863 LICENSED PROFESSIONAL ENGINEER
1/10/18 Exp: 6/30/18

ELECTRICAL DEMOLITION PLAN GENERATOR BUILDING

ED201G.8

# MECHANICAL (HVAC) SYMBOLS AND ABBREVIATIONS

NOTE: SYMBOLS INDICATED HERE AND NOT USED IN THE CONTRACT DOCUMENTS DO NOT APPLY TO THIS PROJECT.
ADDITIONAL SYMBOLS MAY BE INDICATED IN THE CONTRACT DOCUMENTS.

## COMMON INSTRUMENTATION DEVICES

- TI OR — TEMPERATURE INDICATOR (THERMOMETER) WITH THERMOWELL
- TI — TEMPERATURE INDICATOR (THERMOMETER) WITHOUT WELL (DIRECT INSERTION)
- TW — THERMOWELL
- TE — TEMPERATURE ELEMENT (DIRECT INSERTION)
- TS — STRAP ON PIPE TEMPERATURE INSTRUMENT (AQUASTAT)
- TT / TE — TEMPERATURE ELEMENT WITH WITH TRANSMITTER AND THERMOWELL
- PI OR — PRESSURE INDICATOR (PRESSURE GAUGE) WITH GAUGE VALVE
- GAUGE CONNECTION WITH GAUGE VALVE
- PDT — PRESSURE DIFFERENTIAL TRANSMITTER
- FE OR — FLOW ELEMENT (FLOW SENSOR)
- FT / FE — FLOW ELEMENT WITH TRANSMITTER (FLOW METER)
- FI — FLOW INDICATOR/FLOW METER
- FS OR — FLOW SWITCH

## GENERAL

ADJ - ADJUSTABLE
AFF - ABOVE FINISHED FLOOR
AL - ALUMINUM
ALT - ALTERNATE
AP - ACCESS PANEL
AVV - AUTOMATIC AIR VENT

BAS - BUILDING AUTOMATION SYSTEM
BBD - BOTTOM BLOWDOWN
BC - BURNER FLAME CONTROL
BD - BLOWDOWN
BFEC - BOILER FEEDWATER FROM ECONOMIZER
BFS - BOILER FEEDWATER PUMP SUCTION
BFW - BOILER FEEDWATER (PUMPED)
BLR - BOILER
BO - BLOWOFF
BOD - BOTTOM OF DUCT
BOP - BOTTOM OF PIPE
BTU - BRITISH THERMAL UNIT
BTUH - BRITISH THERMAL UNITS PER HOUR

CA - COMBUSTION AIR
CAV - CONSTANT AIR VOLUME
CBD - CONTINUOUS BLOWDOWN
CD - CONDENSATE DRAIN
CF - CHEMICAL FEED
CFCI - CONTRACTOR FURNISHED, CONTRACTOR INSTALLED
CFM - CUBIC FEET PER MINUTE
CL - CENTERLINE
CLG - CEILING
COND - CONDENSATE/CONDENSER
COP - CENTER OF PIPE
CS - CARBON STEEL
CU - COPPER
CW - COLD WATER (POTABLE DOMESTIC)

DA - DEAERATOR
DB - DRY BULB
DDC - DIRECT DIGITAL CONTROL
DR - DRAIN
DX - DIRECT EXPANSION

EA - EXHAUST AIR
EAT - ENTERING AIR TEMPERATURE
EC - ELECTRICAL CONTRACTOR
ED - EQUIPMENT DRAIN
EDR - EQUIVALENT DIRECT RADIATION
EL - ELEVATION
ESP - EXTERNAL STATIC PRESSURE
ETR - EXISTING TO REMAIN
EWT - ENTERING WATER TEMPERATURE
EXH - EXHAUST
FA - FRESH AIR INTAKE/ FIELD ADJUSTABLE
FAT - FINAL AIR TEMPERATURE
FC - FAIL CLOSED
FE - FUME HOOD EXHAUST
FLA - FULL LOAD AMPS
FLR - FLOOR
FO - FAIL OPEN
FPI - FINS PER INCH
FPM - FEET PER MINUTE
FPS - FEET PER SECOND
GA - GAUGE
GC - GENERAL CONTRACTOR
GE - GENERAL EXHAUST
GPM - GALLONS PER MINUTE
GS - GALVANIZED STEEL

HP - HORSE POWER/HIGH POINT
HPR - HIGH PRESSURE CONDENSATE RETURN
HPS - HIGH PRESSURE STEAM
HX - HIGH PRESSURE STEAM
IA - INSTRUMENT AIR
IE - INVERT ELEVATION
KO - KNOCK-OUT
LAT - LEAVING AIR TEMPERATURE
LPR - LOW PRESSURE CONDENSATE RETURN
LPS - LOW PRESSURE STEAM
LWT - LEAVING WATER TEMPERATURE
MAV - MANUAL AIR VENT
MBH - THOUSANDS OF BTU PER HOUR
MC - MECHANICAL CONTRACTOR
MEP - MECHANICAL, ELECTRICAL AND PIPING
MER - MECHANICAL EQUIPMENT ROOM
MPR - MEDIUM PRESSURE CONDENSATE RETURN
MPS - MEDIUM PRESSURE STEAM
NA - NOT APPLICABLE
NC - NORMALLY CLOSED
NIC - NOT IN CONTRACT
NO - NORMALLY OPEN
NPS - NOMINAL PIPE SIZE
NPT - NATIONAL PIPE THREAD
NTS - NOT TO SCALE
OA - OUTSIDE AIR
OC - ON CENTER
OED - OPEN END DUCT
OFCI - OWNER FURNISHED, CONTRACTOR INSTALLED
OFOI - OWNER FURNISHED, OWNER INSTALLED
OV - OUTLET VELOCITY
PA - PLANT AIR
PC - PLUMBING CONTRACTOR
PC - PUMPED CONDENSATE
PCF - POUNDS PER CUBIC FOOT
PD - PRESSURE DROP
PH - PHASE
PP - POLYPROPYLENE
PSF - POUNDS PER SQUARE FOOT
PSI - POUNDS PER SQUARE INCH
PSIA - POUNDS PER SQUARE INCH ABSOLUTE
PSIG - POUNDS PER SQUARE INCH GAUGE
RA - RETURN AIR
RPM - REVOLUTIONS PER MINUTE
SA - SUPPLY AIR
SCH - SCHEDULE
SOG - SLAB ON GRADE
SP - STATIC PRESSURE
SS - STAINLESS STEEL
STM - STEAM
SW - SOFTWATER
TA - TRANSFER AIR
TBR - TO BE REMOVED
TOB - TOP OF BEAM
TOD - TOP OF DUCT/TOP OF DECK
TOJ - TOP OF JOIST
TOP - TOP OF PIPE
TOS - TOP OF SLAB
TSP - TOTAL STATIC PRESSURE
V - VOLTS
VAV - VARIABLE AIR VOLUME
VP - VELOCITY PRESSURE
VTR - VENT THRU ROOF
WB - WET BULB
WC - WATER COLUMN
WG - WATER GAUGE
X - EXISTING

## EQUIPMENT

AS - AIR SEPARATOR
B - BOILER
BH - BOOSTER HUMIDIFIER
CC - COOLING COIL
CH - CHILLER
CP - CONDENSATE PUMP/ CONTROL PANEL
CT - COOLING TOWER
D - DAMPER
EF - EXHAUST FAN
EJ - EXPANSION JOINT
F - FILTER
FD - FLOOR DRAIN
FOP - FUEL OIL PUMP
FOT - FUEL OIL TANK
IH - INTAKE HOOD

MCC - MOTOR CONTROL CENTER
P - PUMP
REF - ROOF EXHAUST FAN
RH - RELIEF HOOD
SD - SUCTION DIFFUSER
SF - SUPPLY FAN
ST - STORAGE TANK/STEAM TRAP
T - TANK
TXV - THERMAL EXPANSION VALVE
V - VALVE
VFD - VARIABLE FREQUENCY DRIVE

## DUCTWORK SPECIALTIES

- DUCT REHEAT COIL
- TEST HOLE
- ACCESS DOOR (OR)
- FLEXIBLE DUCT (OR)
- DUCT FLEXIBLE CONNECTION
- POINT OF CHANGE IN DUCT CONSTRUCTION BY PRESSURE CLASS (3|2)

## MISCELLANEOUS

- VIBRATION ISOLATOR

## SPECIAL DESIGNATION

- P / 1 — EQUIPMENT (PUMP INDICATED)
- 2 — SPECIALTY ITEMS (I.E. GAUGE FILTER, ETC.)
- REFER / M-1 — PLAN CONTINUATION REFERENCE
- 1 / M-1 — SECTION DESIGNATION (TOP DESIGNATES SECTION NUMBER, BOTTOM DESIGNATES ON WHICH SHEET SECTION APPEARS)
- MATCHLINE DESIGNATION
- POINT OF NEW CONNECTION TO EXISTING
- DISCONNECT FROM EXISTING
- 2 / M-1 — DETAIL REFERENCE (TOP=DETAIL NO., BOTTOM=DRAWING NO. SHOWN ON)
- A/15B-6 OR A / 15B-6 — DETAIL REFERENCE (TOP= DETAIL NO., BOTTOM=SHEET NO. IN DETAIL MANUAL)
- 1 — REVISION REFERENCE
- 1 — GENERAL OR SPECIAL NOTES REFERENCE
- 102 — ROOM NUMBER DESIGNATION
- 1001 — CONSTRUCTION BULLETIN REVISION NUMBER

## VALVES

- BUTTERFLY VALVE
- GATE VALVE
- GLOBE VALVE
- BALL VALVE
- SHUTOFF VALVE (BUTTERFLY VALVE FOR 2 1/2" AND LARGER. BALL VALVE FOR 2" AND SMALLER)
- GAUGE VALVE
- PLUG VALVE
- BALANCING VALVE
- THERMAL EXPANSION VALVE
- SPRING CHECK VALVE
- SWING CHECK VALVE
- DIAPHRAGM VALVE
- 2-WAY SOLENOID VALVE (XX)
- 2-WAY CONTROL VALVE (VALVE BODY AS SPECIFIED) (XX)
- 3-WAY MIXING VALVE WITH ARROW INDICATING FAIL POSITION
- 3-WAY DIVERTING VALVE WITH ARROW INDICATING FAIL POSITION
- 4-WAY VALVE WITH ARROW INDICATING FAIL POSITION
- TRIPLE DUTY VALVE
- DRAIN VALVE
- DRAIN VALVE WITH CAP
- LOCKSHIELD VALVE
- PRESSURE REDUCING VALVE-PRV (DOWNSTREAM SETPOINT)
- AIR-LOADED PRESSURE REDUCING VALVE-PRV (DOWNSTREAM SETPOINT)
- PRESSURE REDUCING VALVE-PRV (UPSTREAM SETPOINT)
- GAS REGULATOR
- REDUCED PRESSURE BACKFLOW PREVENTER (RPBP)
- PRESSURE RELIEF VALVE (RV) OR SAFETY VALVE (SV)
- VACUUM RELIEF/VACUUM BREAKER
- RUPTURE DISK PRESSURE RELIEF
- RUPTURE DISK VACUUM RELIEF
- FLOAT OPERATED VALVE
- QUICK OPENING VALVE
- GAS SHUTOFF VALVE
- ANGLE VALVE

(XX)=DEFINES FAIL POSITION OR NORMAL POSITION
FC=FAIL CLOSED (CONTROL VALVE OR DAMPER)
FO=FAIL OPEN (CONTROL VALVE OR DAMPER)
NC=NORMALLY CLOSED (CONTROL VALVE OR DAMPER)
NO=NORMALLY OPEN (CONTROL VALVE OR DAMPER)

## DUCTWORK

SINGLE | DOUBLE

- RECTANGULAR/ROUND BRANCH TAKE-OFF (SA) OR ROUND/ROUND BRANCH TAKE-OFF (SA)
- ROUND/ROUND BRANCH TAKE OFF (RA, EA)
- RECTANGULAR/ROUND BRANCH TAKE OFF (RA, EA) — 45°; D; 1/4 D BUT NOT NOT LESS 6"
- 45° LATERAL BRANCH
- RADIUS TEE — R=1.5W; W
- SQUARE TEE W/TURNING VANES (FOR LOW PRESSURE SA DIVERGING ONLY)
- BULLHEAD TEE (FOR LOW PRESSURE SA DUCTWORK ONLY) — 1/4 W BUT NOT LESS THAN 6"; 45°; W
- 15° MAX. FOR DIVERGING, 25° MAX FOR CONVERGING TRANSITION - ECCENTRIC
- 15° MAX. FOR DIVERGING, 25° MAX FOR CONVERGING TRANSITION - CONCENTRIC
- EXISTING DUCT TO REMAIN
- EXISTING DUCT TO BE REMOVED
- FLOW DIRECTION DESIGNATION
- LINE CONTINUATION BREAK (RECTANGULAR, ROUND) (OR)
- SUPPLY AIR (SA) OR OUTDOOR AIR (OA) DUCT (SOLID LINE WITH FILL OR HATCH TYPICAL FOR SUPPLY AND OUTDOOR AIR UP, BROKEN LINE DOWN)
- RETURN AIR (RA), RELIEF AIR, OR TRANSFER AIR (TA) DUCT (SOLID LINE WITH FILL OR HATCH TYPICAL FOR RETURN, RELIEF AND TRANSFER AIR UP, BROKEN LINE DOWN)
- EXHAUST AIR (EA) DUCT (SOLID LINE WITH FILL OR HATCH TYPICAL FOR EXHAUST AIR UP, BROKEN LINE DOWN)
- DUCT RISE/DROP W/90° ELBOWS (SUPPLY RECTANGULAR DUCT SHOWN)
- DUCT RISE (R)/DROP(D) W/45° ELBOWS (RECTANGULAR DUCTS)
- DUCT RISE/DROP W/90° ELBOWS (ROUND DUCTS)
- DUCT RISE/DROP W/90° ELBOWS (OVAL DUCTS)
- DUCT RISE(R)/DROP(D) W/45° ELBOWS (ROUND OR OVAL DUCTS)
- RADIUS ELBOW — W; R=1.5W
- SINGLE LINE SYMBOL INDICATES EITHER RADIUS OR SQUARE ELBOW (REFER TO SPEC. SECTION 15850 PART 3 FOR ADDITIONAL REQUIREMENTS INCLUDING TURNING VANES) — SQUARE ELBOW OR RADIUS ELBOW; W; R=1.5W
- SQUARE/RECTANGULAR BRANCH TAKE-OFF (SA, RA, OR EA) — 45°; W; 1/4 W BUT NOT LESS THAN 6"

## PIPING SYSTEM LABELS

- CHS — CHILLED WATER SUPPLY
- CHR — CHILLED WATER RETURN
- CPD — CONDENSATE PUMP DISCHARGE
- CTR — COOLING TOWER RETURN
- CTS — COOLING TOWER SUPPLY
- D — DRAIN
- FOR — FUEL OIL RETURN
- FOS — FUEL OIL SUPPLY
- FOV — FUEL OIL VENT
- HPS(XX) — HIGH PRESSURE STEAM
- TWR — TOWER WATER RETURN
- TWS — TOWER WATER SUPPLY

(XX) = SYSTEM PRESSURE IN PSIG

## PIPING SPECIALTIES

- GENERAL PIPELINE STRAINER WITHOUT DRAIN
- GENERAL PIPELINE STRAINER WITH DRAIN
- STEAM & CONDENSATE PIPELINE STRAINER
- WATER SYSTEM PIPELINE STRAINER
- SUCTION DIFFUSER
- DUPLEX STRAINER
- BASKET STRAINER
- FLANGE
- UNION
- 2" AND SMALLER, CAP OR PLUG 2-1/2" AND LARGER, BLIND FLANGE
- INVERTED BUCKET TRAP
- FLOAT AND THERMOSTATIC TRAP
- THERMOSTATIC TRAP
- EXPANSION JOINT
- PIPE FLEXIBLE CONNECTION
- BALL JOINT
- NOISE SUPPRESSOR
- SHOCK SUPPRESSOR
- FILTER/REGULATOR
- THERMOMETER
- PRESSURE GAUGE (WITH GAUGE VALVE)
- FLOW SENSOR
- FLOW SWITCH
- AUTOMATIC AIR VENT
- MANUAL AIR VENT
- THERMOSTATIC AIR VENT
- TEST PLUG (PRESSURE/TEMP.)
- CONCENTRIC OR ECCENTRIC REDUCER
- CONCENTRIC REDUCER
- ECCENTRIC REDUCER
- DIRECTION OF PITCH (DOWN)
- DIRECTION OF FLOW
- PIPE GUIDE
- PIPE SLEEVE
- ANCHOR
- PIPE SUPPORT

## PIPING

SINGLE | DOUBLE

- ELBOW DOWN
- ELBOW UP
- BOTTOM CONNECTION (45° OR 90°)
- TOP CONNECTION (45° OR 90°)
- 45° PIPE RISE(R) /DROP(D)
- TEE (REFER TO SPECIFICATION FOR SIDE, TOP OR BOTTOM TEE) — N/A
- EXISTING PIPING TO REMAIN
- EXISTING PIPING TO BE REMOVED
- FLOW DIRECTION DESIGNATION
- LINE CONTINUATION BREAK

## DAMPERS

- MANUAL BALANCING DAMPER
- CONTROL DAMPER (XX)
- BACKDRAFT DAMPER (BD)
- OPPOSED BLADE DAMPER
- PARALLEL BLADE DAMPER

(XX) DEFINES FAIL POSITION OR NORMAL POSITION.
FC = FAIL CLOSED (CONTROL VALVE OR DAMPER)
FO = FAIL OPEN (CONTROL VALVE OR DAMPER)
NC = NORMALLY CLOSED (CONTROL VALVE OR DAMPER)
NO = NORMALLY OPEN (CONTROL VALVE OR DAMPER)

## ACTUATORS

- MANUAL
- GENERAL
- MODULATING
- MODULATING WITH PILOT POSITIONER
- S — SOLENOID
- M — ELECTRIC MOTOR DRIVEN
- TWO POSITION SPRING RETURN
- DOUBLE ACTING TWO POSITION
- FUSIBLE LINK


CHAMPLIN ARCHITECTURE
720 E Pete Rose Way, Suite 140
Cincinnati, OH 45202
T 513.241.4474 F 513.241.0081
thinkchamplin.com
THINK CREATE REALIZE

Affiliated Engineers

THP


UNIVERSITY OF KENTUCKY

**CAMPUS INFRASTRUCTURE & C.U.P.**

BID PACKAGE 8
University of Kentucky

LEXINGTON, KENTUCKY

**ISSUANCES**

| No. | Description | Date |
|---|---|---|
| 1 | Issued for Bid and Permit | 01/12/18 |

Drawn By: CA
Checked By: CA
Client Number: 514
Project Number: 5601

STATE OF KENTUCKY — SCOTT FOSTER — 31321 — LICENSED PROFESSIONAL ENGINEER — 06/30/2019

HVAC SYMBOLS AND ABBREVIATIONS

H001.8

# INSTRUMENTATION DESCRIPTION TABLE

| | FIRST LETTER | | SUCCEEDING LETTER | | |
|---|---|---|---|---|---|
| | MEASURED OR INITIATED VARIABLE | MODIFIER | READOUT OR PASSIVE FUNCTION | OUTPUT FUNCTION | MODIFIER |
| A | ANALYSIS | | ALARM | ALARM/AUTOMATIC | |
| B | BURNER FLAME | | USER'S CHOICE | USER'S CHOICE | USER'S CHOICE |
| C | CONDUCTIVITY | CUT-OFF | | CONTROL | CLOSED |
| D | DENSITY (MASS) OR SPECIFIC GRAVITY | DIFFERENTIAL | | | |
| E | VOLTAGE (EMF) | | SENSOR (PRIMARY ELEMENT) | | |
| F | FLOW RATE | RATIO (FRACTION) | | | FULL |
| G | GAUGING (DIMENSIONAL) | | GLASS, VIEWING DEVICE | | |
| H | HAND (MANUALLY INITIATED) | | | | HIGH |
| I | CURRENT (ELECTRICAL) | | INDICATE | | |
| J | POWER | SCAN | | | |
| K | TIME OR TIME SCHEDULE | TIME RATE OF CHANGE | | CONTROL STATION | |
| L | LEVEL | | LIGHT (PILOT) | | LOW |
| M | MOISTURE, HUMIDITY | MOMENTARY | | | MIDDLE OR INTERMEDIATE |
| N | CONSISTENCY | | USER'S CHOICE | USER'S CHOICE | USER'S CHOICE |
| O | POTENTIAL OF HYDROGEN (PH) | OVERFLOW | ORIFICE (RESTRICTION) | | OPEN |
| P | PRESSURE OR VACUUM | PUMP | POINT (TEST) CONNECTION | | |
| Q | QUALITY OR EVENT | INTEGRATE OR TOTALIZE | | | |
| R | RADIOACTIVITY | | RECORD OR PRINT | | |
| S | SPEED OR SOLENOID FREQUENCY | SAFETY | | SWITCH | |
| T | TEMPERATURE | | | TRANSMIT | |
| U | MULTIVARIABLE | | MULTIFUNCTION | MULTIFUNCTION | MULTIFUNCTION |
| V | VISCOSITY OR VIBRATION | | | VALVE, DAMPER, OR LOUVER | |
| W | WEIGHT OR FORCE | | WELL | | |
| X | UNCLASSIFIED | | UNCLASSIFIED | UNCLASSIFIED | UNCLASSIFIED |
| Y | USER'S CHOICE | | | RELAY OR COMPUTE | |
| Z | POSITION | | | DRIVE, ACTUATE, OR UNCLASSIFIED FINAL CONTROL ELEMENT | |

# CONTROL INSTRUMENTATION LEGEND

| SYMBOL | DESCRIPTION |
|---|---|
| XXXX XXXX | INSTRUMENTATION DESCRIPTION (SEE INSTRUMENTATION DESCRIPTION TABLE) |
| | INSTRUMENT LOOP NUMBER |
| XXXX XXXX | BASIC INSTRUMENTATION SYMBOL LOCAL MOUNTED |
| XXXX XXXX | FRONT PANEL MOUNTED AND/OR DATA COLLECTION SYSTEM (DCS) |
| I | INTERLOCK (GENERAL) |
| B | BURNER MANAGEMENT SYSTEM (BMS) |
| C | COMBUSTION CONTROL SYSTEM (CCS) |
| I/P | CURRENT TO PNEUMATIC TRANSDUCER |

# GENERAL NOTES

1. ALL PIPING, DUCTWORK, EQUIPMENT, AND MATERIALS SHOWN "LIGHT" ARE EXISTING TO REMAIN. ALL PIPING, DUCTWORK, EQUIPMENT, AND MATERIALS SHOWN "HEAVY AND SOLID" ON DEMOLITION DRAWINGS ARE EXISTING AND SHALL BE REMOVED. ALL PIPING, DUCTWORK, EQUIPMENT, AND MATERIALS SHOWN "HEAVY AND SOLID" ON NEW WORK DRAWINGS ARE NEW AND SHALL BE FURNISHED AND INSTALLED BY THIS CONTRACTOR.
2. EXISTING CONDITIONS, (I.E., PRESENCE AND LOCATION OF DUCTWORK, PIPING, EQUIPMENT, AND MATERIALS INDICATED) ARE BASED ON INFORMATION OBTAINED FROM AVAILABLE RECORD DRAWINGS AND FIELD SURVEYS AND ARE NOT WARRANTED TO BE COMPLETE OR CORRECT. CONTRACTOR SHALL FIELD VERIFY EXACT LOCATION OF ALL DUCTWORK, PIPING, EQUIPMENT, AND MATERIALS IN THE FIELD PRIOR TO STARTING ALL WORK.
3. EXISTING DUCT, PIPE, AND EQUIPMENT SIZES NOTED ARE FOR THE CONVENIENCE OF THE CONTRACTOR ONLY AND ARE NOT WARRANTED TO BE CORRECT. CONTRACTOR SHALL VERIFY ALL SIZES IN THE FIELD.
4. THE CONTRACT DRAWINGS ARE DIAGRAMMATIC AND INDICATE THE GENERAL ARRANGEMENT OF SYSTEMS AND WORK INCLUDED IN THE CONTRACT. DO NOT SCALE THE DRAWINGS. THE CONTRACTOR SHALL BE RESPONSIBLE FOR COORDINATING WITH ALL OTHER TRADES/ SUBCONTRACTORS AND OTHER CONCURRENT PROJECTS INCLUDING BUT NOT LIMITED TO STRUCTURAL STEEL, ELECTRICAL, AND GENERAL TRADES.
5. TO COMPENSATE FOR THERMAL EXPANSION, ALL PIPING SYSTEMS ABOVE 200°F, THE GENERAL INTENT OF THE PIPING SYSTEM(S) IS INDICATED ON THE CONTRACT DOCUMENTS AND THE CONTRACTOR SHALL INSTALL AS INTENDED. FOR STEAM, CONDENSATE RETURN, PUMPED CONDENSATE, AND BOILER FEED WATER SYSTEMS, THE CONTRACTOR SHALL PROVIDE CALCULATIONS FOR THERMAL EXPANSION, FORCES AND MOMENTS, TO ENGINEER FOR REVIEW.
6. WHEN WORKING IN AND AROUND THE EXISTING BUILDING, EXTREME CARE SHALL BE EXERCISED WITH REGARD TO PROTECTION OF THE EXISTING STRUCTURES, MECHANICAL AND ELECTRICAL SYSTEMS WHICH WILL REMAIN. REPAIR, REPLACE, OR RESTORE TO THE SATISFACTION OF THE UNIVERSITY OF KENTUCKY CONSTRUCTION MANAGER, ALL EXISTING WORK DAMAGED IN THE PERFORMANCE OF THE DEMOLITION AND/OR NEW WORK.
7. ALL EXISTING PIPING, EQUIPMENT, DUCTWORK, AND MATERIALS NOT REQUIRED FOR RE-USE OR RE-INSTALLATION (SHOWN OR OTHERWISE) SHALL BE REMOVED. ALL EXISTING MATERIALS AND EQUIPMENT WHICH ARE REMOVED AND ARE DESIRED BY UNIVERSITY OF KENTUCKY, OR ARE INDICATED TO REMAIN THE PROPERTY OF UNIVERSITY OF KENTUCKY SHALL BE DELIVERED BY THE CONTRACTOR WHERE DIRECTED BY THE UNIVERSITY OF KENTUCKY CONSTRUCTION MANAGER. ALL OTHER MATERIALS AND EQUIPMENT WHICH ARE REMOVED SHALL BECOME THE PROPERTY OF THE CONTRACTOR AND SHALL BE REMOVED BY THE CONTRACTOR FROM THE PREMISES.
8. EXISTING PIPING NO LONGER REQUIRED TO REMAIN IN SERVICE (SHOWN OR OTHERWISE) SHALL BE DISCONNECTED AND REMOVED BACK TO SERVICE MAINS UNLESS OTHERWISE INDICATED OR NOTED ON PLANS. REMOVE EXISTING PIPE HANGERS, SUPPORTS, VALVES, ETC. UNDERGROUND PIPING TO BE REMOVED SHALL BE LIMITED TO PIPING IN THE AREAS OCCUPIED BY THE NEW CONSTRUCTION AND 5 FEET BEYOND THE NEW CONSTRUCTION. EXISTING PIPING INDICATED OR REQUIRED TO REMAIN IN SERVICE OR IN PLACE SHALL BE CAPPED, PLUGGED, OF OTHERWISE SEALED. NO EXISTING PIPING SHALL BE LEFT OPEN-ENDED.
9. EXISTING MECHANICAL EQUIPMENT, PIPING, DUCTWORK, AND MATERIALS AFFECTED BY DEMOLITION OR NEW WORK INSTALLATION AND REQUIRED TO REMAIN IN SERVICE SHALL BE RE-INSTALLED OR SUPPORTED AS REQUIRED IN ACCORDANCE WITH THE NEW WORK SPECIFICATIONS. ALL WORK SHALL BE COMPLETED TO THE SATISFACTION OF UNIVERSITY OF KENTUCKY CONSTRUCTION MANAGER AND AT NO ADDITIONAL CONTRACT COST.
10. WHEN EXISTING MECHANICAL AND ELECTRICAL WORK IS REMOVED, ALL PIPES, VALVES, DUCTS, AND MATERIALS SHALL BE REMOVED TO A POINT BELOW THE FINISHED FLOORS OR BEHIND FINISHED WALLS AND CAPPED. SUCH POINTS SHALL BE BEHIND FINISHED SURFACES TO ALLOW FOR THE INSTALLATION OF NEW FINISHED MATERIAL.
11. PATCH TO MATCH EXISTING ALL NEW AND EXISTING OPENINGS AND WALLS, CEILINGS, ROOF, AND FLOOR SURFACES DAMAGED OR CREATED BY DEMOLITION WORK. PATCHING WHERE POSSIBLE SHALL MATCH EXISTING ADJACENT SURFACES AS TO THICKNESS, TEXTURE MATERIALS, AND COLOR. ALL PATCHING SHALL BE PERFORMED TO THE SATISFACTION OF THE UNIVERSITY OF KENTUCKY CONSTRUCTION MANAGER AND AT NO ADDITIONAL CONTRACT COST. ALL EXISTING INSULATION DAMAGE BY THE CONTRACTOR SHALL BE REPAIRED OR REPLACED TO THE SATISFACTION OF THE UNIVERSITY OF KENTUCKY CONSTRUCTION MANAGER.
12. ALL NEW PIPE PENETRATIONS THROUGH FIRE RATED ASSEMBLIES SHALL BE SEALED WITH A MINIMUM 3 HOUR FIREPROOFING MATERIAL AND PATCHED TO MATCH ADJACENT SURFACES.
13. ALL INTERIOR FLOOR AND WALL PENETRATIONS SHOWN PER NEW WORK DRAWINGS SHALL BE NEW FIRE RATED PENETRATIONS IN ACCORDANCE WITH THE PROJECT SPECIFICATIONS AND MECHANICAL FIRE RATED DETAILS. IN SOME INSTANCES EXISTING PENETRATIONS MAY BE ENLARGED AND REUSED UPON WRITTEN APPROVAL FROM THE UNIVERSITY OF KENTUCKY CONSTRUCTION MANAGER.
14. THE CONTRACTOR SHALL REMOVE ALL ASSOCIATED ACCESSORIES, CONTROLS, ENCLOSURES, SUPPORTS, HANGERS, PADS, ETC. WITH ALL EQUIPMENT SHOWN TO BE REMOVED. CONTRACTOR SHALL REPAIR AND PAINT DAMAGED SURFACES AND ALL SURFACES BEHIND ALL EQUIPMENT SHOWN TO BE REMOVED TO MATCH EXISTING ADJACENT SURFACES.
15. THE CONTRACTOR SHALL BE RESPONSIBLE FOR THE REMOVAL OF ALL FLUIDS CONTAINED WITHIN ALL PIPING, EQUIPMENT, AND TANKS. NO FLUIDS SHALL BE ALLOWED TO BE DISCHARGED TO SANITARY OR STORM LINES WITHOUT WRITTEN APPROVAL FROM THE UNIVERSITY OF KENTUCKY CONSTRUCTION MANAGER. THE CONTRACTOR SHALL BE RESPONSIBLE FOR CONTAINING, HAULING, AND PROPERLY AND LEGALLY DISPOSING OF ALL REMOVED FLUIDS FROM THE SITE.
16. THE CONTRACTOR SHALL PROVIDE LOW POINT DRAINS AS REQUIRED TO COMPLETELY DRAIN ALL NEW WORK SYSTEMS. THE CONTRACTOR SHALL ALSO PROVIDE HIGH POINT MANUAL AIR VENTS IN NEW WORK SYSTEMS.
17. ALL 2" AND SMALLER PIPING SHALL BE FIELD ROUTED. ROUTE OF PIPE, INCLUDING CLEARANCES, SHALL BE THE RESPONSIBILITY OF THE CONTRACTOR, TO THE SATISFACTION OF THE UNIVERSITY OF KENTUCKY CONSTRUCTION MANAGER.
18. ALL CONTROL VALVES AND IN-LINE INSTRUMENTATION SHALL BE INSTALLED BY THE CONTRACTOR. THE CONTRACTOR SHALL BE RESPONSIBLE FOR PROVIDING ALL FITTINGS REQUIRED FOR INSTRUMENTATION POINTS.
19. ALL PIPING AND VALVES SHALL BE THOROUGHLY FLUSHED CLEAN AND BLOWN OUT WITH WATER, AIR, OR STEAM.
20. UNIONS, BUSHINGS, AND/OR REDUCING INSERTS, ETC., NOT SHOWN ON THE DRAWINGS BUT ARE REQUIRED FOR INSTALLATION, SHALL BE FURNISHED AND INSTALLED BY THE CONTRACTOR.
21. BRANCH CONNECTIONS:
    - 21.A. BRANCH CONNECTIONS 2" AND SMALLER ON PIPING 2½" AND LARGER SHALL BE MADE USING THREAD-O-LETS OR SOCK-O-LETS.
    - 21.B. HALF COUPLINGS (3000# MINIMUM) MAY BE SUBSTITUTED FOR THE ABOVE WHEN INSTALLED IN THE SHOP.
22. SPECIFICATIONS SHALL TAKE PRECEDENCE WHERE DISCREPANCIES OCCUR BETWEEN DRAWINGS AND SPECIFICATIONS.
23. ALL WORK SHALL BE PERFORMED IN ACCORDANCE WITH THE STATE, CITY, AND THE LOCAL FIRE MARSHALL'S REQUIREMENTS.
24. ALL WORK SHALL BE PERFORMED IN A SEQUENCE AND DURING HOURS SPECIFIED TO MINIMIZE DISRUPTION TO THE FACILITY.
25. NOTIFY THE UNIVERSITY OF KENTUCKY CONSTRUCTION MANAGER, IN WRITING, AT LEAST TEN (10) WORK DAYS IN ADVANCE OF ALL REQUIRED SHUTDOWNS OF WATER, FIRE, SEWER, GAS, ELECTRICAL SERVICE, OR OTHER UTILITIES. UPON WRITTEN RECEIPT OF APPROVAL FROM THE UNIVERSITY OF KENTUCKY CONSTRUCTION MANAGER, SHUTDOWN SHALL BE PERFORMED BETWEEN THE HOURS OF SIX (6:00) PM AND SIX (6:00) AM OR AS DIRECTED OTHERWISE BY THE UNIVERSITY OF KENTUCKY CONSTRUCTION MANAGER AND SHALL BE ACCOMPLISHED AT NO ADDITIONAL CONTRACT COST. AT THE END OF EACH SHUTDOWN ALL SERVICES SHALL BE RESTORED SO THAT NORMAL USE OF THE UTILITIES CAN CONTINUE.


CHAMPLIN ARCHITECTURE
720 E Pete Rose Way, Suite 140
Cincinnati, OH 45202
T 513.241.4474 F 513.241.0081
thinkchamplin.com
THINK CREATE REALIZE

Affiliated Engineers

THP

UNIVERSITY OF KENTUCKY


**CAMPUS INFRASTRUCTURE & C.U.P.**

BID PACKAGE 8

University of Kentucky

LEXINGTON, KENTUCKY

**ISSUANCES**

| No. | Description | Date |
|---|---|---|
| 1 | Issued for Bid and Permit | 01/12/18 |

**Drawn By** CA

**Checked By** CA

**Client Number** 514

**Project Number** 5601

STATE OF KENTUCKY SCOTT [illegible] 31321 LICENSED PROFESSIONAL ENGINEER 06/30/2019

HVAC CUP CONTROLS LEGEND AND GENERAL NOTES

H002.8

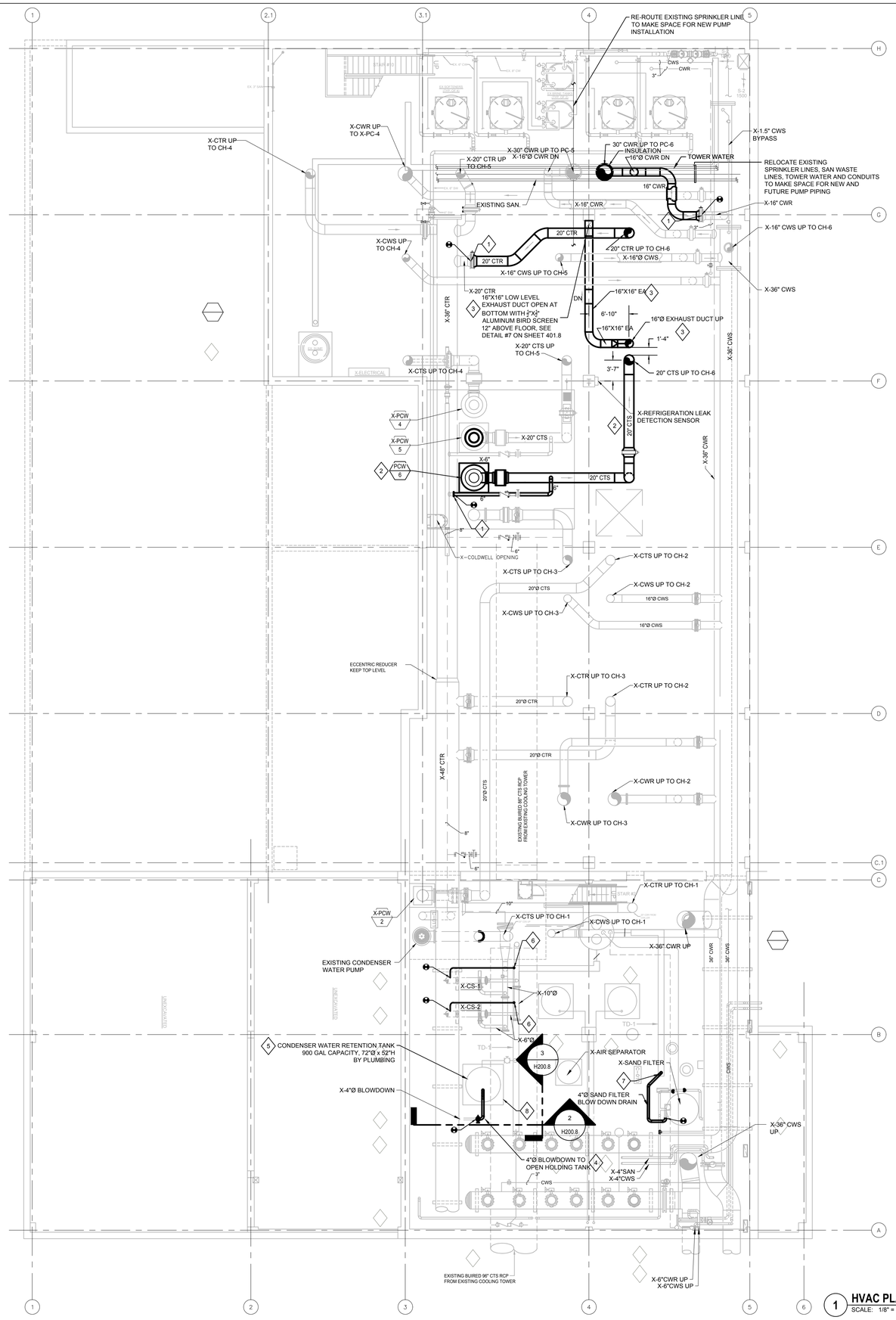


## 1 HVAC PLAN CUP BUILDING BASEMENT
SCALE: 1/8" = 1'-0"

## KEY NOTES

1 PRIOR TO START OF CONSTRUCTION COORDINATE SHUT DOWN WITH OWNER. REMOVE EXISTING BLIND FLANGES AND CONNECT NEW 16"Ø CWS, 16"Ø CWR, 6"Ø TO CENTRIFUGAL SEPARATORS AND 20"Ø CTR PIPING TO EXISTING. PROVIDE NEW ISOLATION VALVES, INCLUDING ALL APPURTENANCES FOR A COMPLETE OPERATING SYSTEM, AND IN ACCORDANCE WITH SPECIFICATIONS AND MANUFACTURERS RECOMMENDATIONS. COORDINATE ALL WORK WITH OTHER TRADES.

2 PROVIDE NEW 20"Ø CTS PIPING AND PUMP. INCLUDING ALL APPURTENANCES FOR A COMPLETE OPERATING SYSTEM, AND IN ACCORDANCE WITH SPECIFICATIONS AND MANUFACTURERS RECOMMENDATIONS. COORDINATE ALL WORK WITH OTHER TRADES.

3 PROVIDE NEW GALVANIZED REFRIGERANT EXHAUST DUCTWORK, INCLUDING ALL SUPPORTS AND APPURTENANCES FOR A COMPLETE OPERATING SYSTEM PER MANUFACTURES RECOMMENDATION AND SPECIFICATIONS. COORDINATE ALL WORK WITH OTHER TRADES.

4 EXTEND EXISTING 4" CONDENSER BLOWDOWN PIPE OVER TO NEW CONDENSER WATER ABOVE GROUND RETENTION TANK. PROVIDE NEW 4" PIPE WITH AIR GAP AND APPURTENANCES FOR A COMPLETE OPERATING SYSTEM. COORDINATE WITH PLUMBING.

5 NEW 900 GALLON ABOVE GROUND POLYETHYLENE OPEN TOP CYLINDRICAL CONDENSER WATER RETENTION TANK, BY PLUMBING. MECHANICAL CONTRACTOR SHALL COORDINATE WITH PLUMBING CONTRACTOR.

6 REWORK EXISTING CENTRIFUGAL SEPARATORS CS-1 AND CS-2, BLOWDOWN DRAINS, VERIFY PIPE SIZE, AND ROUTE TO NEW FLOOR TRENCH DRAIN. PROVIDE MINIMUM 2" AIR GAP, NEW PIPE, ISOLATION VALVE AND RELOCATE EXISTING CONTROL VALVE INCLUDING ALL APPURTENANCES FOR A COMPLETE OPERATING SYSTEM, IN ACCORDANCE WITH SPECIFICATIONS AND MANUFACTURERS RECOMMENDATIONS. COORDINATE WITH PLUMBING.

7 REWORK EXISTING 4" CPVC SAND FILTER BLOW DOWN DRAIN PIPE AND ROUTE OVER TO NEW FLOOR TRENCH DRAIN. PROVIDE NEW PIPE ALONG WITH 4" AIR GAP, INCLUDING ALL APPURTENANCES FOR A COMPLETE OPERATING SYSTEM, IN ACCORDANCE WITH SPECIFICATIONS AND MANUFACTURERS RECOMMENDATIONS. COORDINATE WITH PLUMBING.

8 GENERAL CONTRACTOR TO PROVIDE NEW 4" HIGH EQUIPMENT PAD, COORDINATE EQUIPMENT LOCATION WITH BOTH PLUMBING AND MECHANICAL.

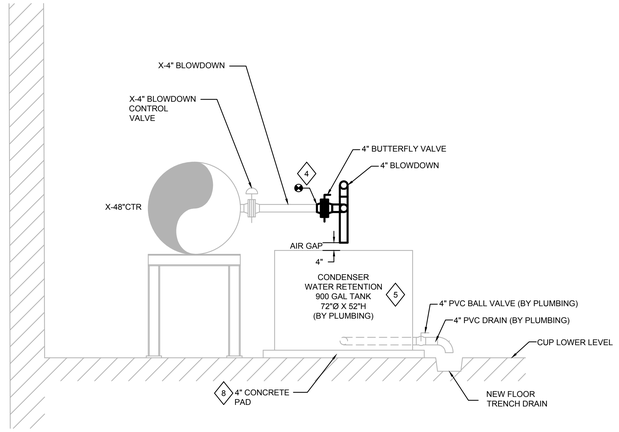


## 2 SECTION/ELEVATION
SCALE: 3/8" = 1'-0"

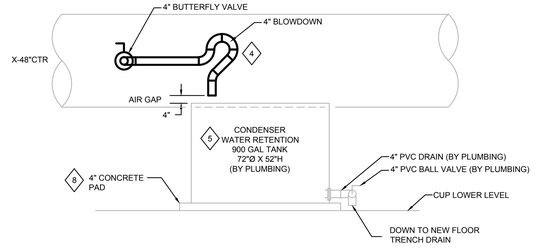


## 3 SECTION/ELEVATION
SCALE: 3/8" = 1'-0"

CHAMPLIN ARCHITECTURE
720 E Pete Rose Way, Suite 140
Cincinnati, OH 45202
T 513.241.4474 F 513.241.0081
thinkchamplin.com
THINK CREATE REALIZE

Affiliated Engineers

THP

UNIVERSITY OF KENTUCKY

# CAMPUS INFRASTRUCTURE & C.U.P.

BID PACKAGE 8

University of Kentucky

LEXINGTON, KENTUCKY

**ISSUANCES**

| No. | Description | Date |
|---|---|---|
| 1 | Issued for Bid and Permit | 01/12/18 |

| | |
|---|---|
| Drawn By CA | |
| Checked By CA | |
| Client Number 514 | |
| Project Number 5601 | |

COMMONWEALTH OF KENTUCKY SCOTT A. FOLTS 31707 LICENSED PROFESSIONAL ENGINEER 01/30/2019

HVAC PLAN CUP BUILDING BASEMENT

H200.8

## CHILLER KEY NOTES

1 FOR NEW R-134A MACHINE, PROVIDE REFRIGERANT LEAK SENSOR AT THIS LOCATION AND EXPAND OFF OF MAIN CONTROL PANEL AT GRID LINE 2.1, C. FOR REFRIGERANT OTHER THAN R-134A, PROVIDE NEW MAIN SYSTEM CONTROL PANEL AT THIS LOCATION ALONG WITH SENSOR.

2 CONTRACTOR SHALL PROVIDE PROFESSIONAL RIGGERS TO ADD SHORING IN BASEMENT FOR RIGGING OF NEW CHILLER.

3 PROVIDE 16"H X 24"W X 144" L CONCRETE SUPPORT BLOCKS ON EACH END OF NEW CHILLER.

4 ROUTE AIR VENT PIPING ALONG SIDE OF CHILLER DOWN TO FLOOR DRAIN

5 ROUTE DRAIN PIPING OFF MARINE WATER BOXES DOWN TO FLOOR DRAIN.

6 REMOVE EXISTING CONDENSATE DRAIN AND (2) AIR VENT PIPES TO MAKE SPACE FOR CTS PIPE DOWN THRU FLOOR. RE-INSTALL/RE-ROUTE CONDENSATE DRAIN AND AIR VENTS BACK TO EXISTING FLOOR DRAIN

7 ROUTE ALL MEDIUM VOLTAGE CONDUIT FROM SWITCHGEAR AND VFD AROUND CHILLER CH-5 TO THE NORTH. NO MV CONDUIT SHALL BE ROUTED DIRECTLY OVER THE CHILLER. MAINTAIN SPACE FOR MOTOR REMOVAL/RIGGING. VFD SHALL BE MOUNTED ON CONCRETE PAD.

8 FILTER MANIFOLD AND ASSOCIATED VALVING SHALL BE ARRANGED TO ALLOW FOR SERVICING OF ONE FILTER WHILE THE OTHER FILTER AND THE CHILLER REMAINS IN OPERATION. OIL PUMP MOTOR AND AUXILIARY GEAR PUMP MOTOR SHALL BE SUITABLE FOR 460 VOLT, 3 PHASE, 60 HERTZ POWER WITH VARIABLE SPEED DRIVES PROVIDED BY OTHERS. THE FILTER MANIFOLD SHALL BE ACCESSIBLE FROM FLOOR LEVEL. IF THIS IS NOT POSSIBLE DUE TO THE CHILLER CONFIGURATION A FIXED OSHA APPROVED LADDER WITH A 30"X30" (MIN.) STAND OFF PLATFORM SHALL BE PROVIDED AT EACH CHILLER

9 PROVIDE FLOW METER AT THIS LOCATION. REFER TO SPEC FOR TYPE. METER VERTICAL CTR PIPE SHALL BE 5'-0" A.F.F. METER ON CWS PIPE SHALL BE DIRECTLY DOWNSTREAM OF VALVE.

10 PROVIDE DIFFERENTIAL PRESSURE SWITCH ON CHILLED WATER AND CONDENSER WATER. REFER TO CONTROLS DOCUMENTATION.

11 PROVIDE FLANGED CONNECTIONS TO CHILLER, PER CHILLER SPEC. MECHANICAL GROOVED COUPLINGS SHALL NOT BE ALLOWED FOR CHILLER CONNECTION.

12 COORDINATE WITH STRUCTURAL CONTRACTOR TO PROVIDE EXTENDED HEIGHT CURB FOR PUMP SO THAT PIPE CONNECTION TO PUMP ARE AT SAME ELEVATION AS CHILLER CONNECTION.

13 PIPING ROUTED ABOVE CHILLER SHALL BE INSTALLED AT A SUITABLE ELEVATION TO ALLOW FOR MAINTENANCE ACCESS AND EQUIPMENT REMOVAL AS REQUIRED PER MANUFACTURERS RECOMMENDATIONS.

14 PROVIDE NEW GALVANIZED EXHAUST DUCT, CONNECT TO EXISTING AND ROUTE DOWN TO BASEMENT LEVEL. CORRDINATE WITH STRUCTURAL DRAWINGS FOR LOCATION OF FLOOR OPENINGS.

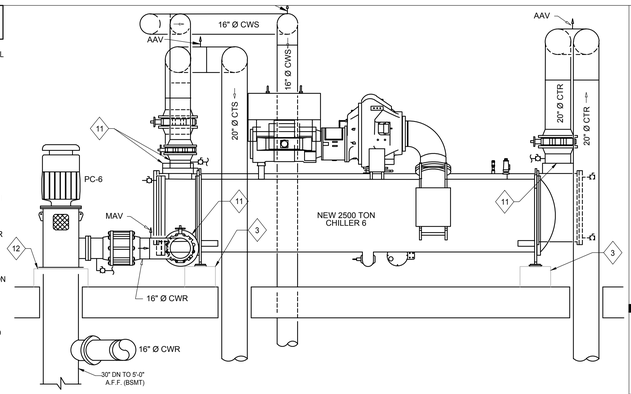


3 **CHILLER SECTION (FACING EAST)**
SCALE: 1/4" = 1'-0"

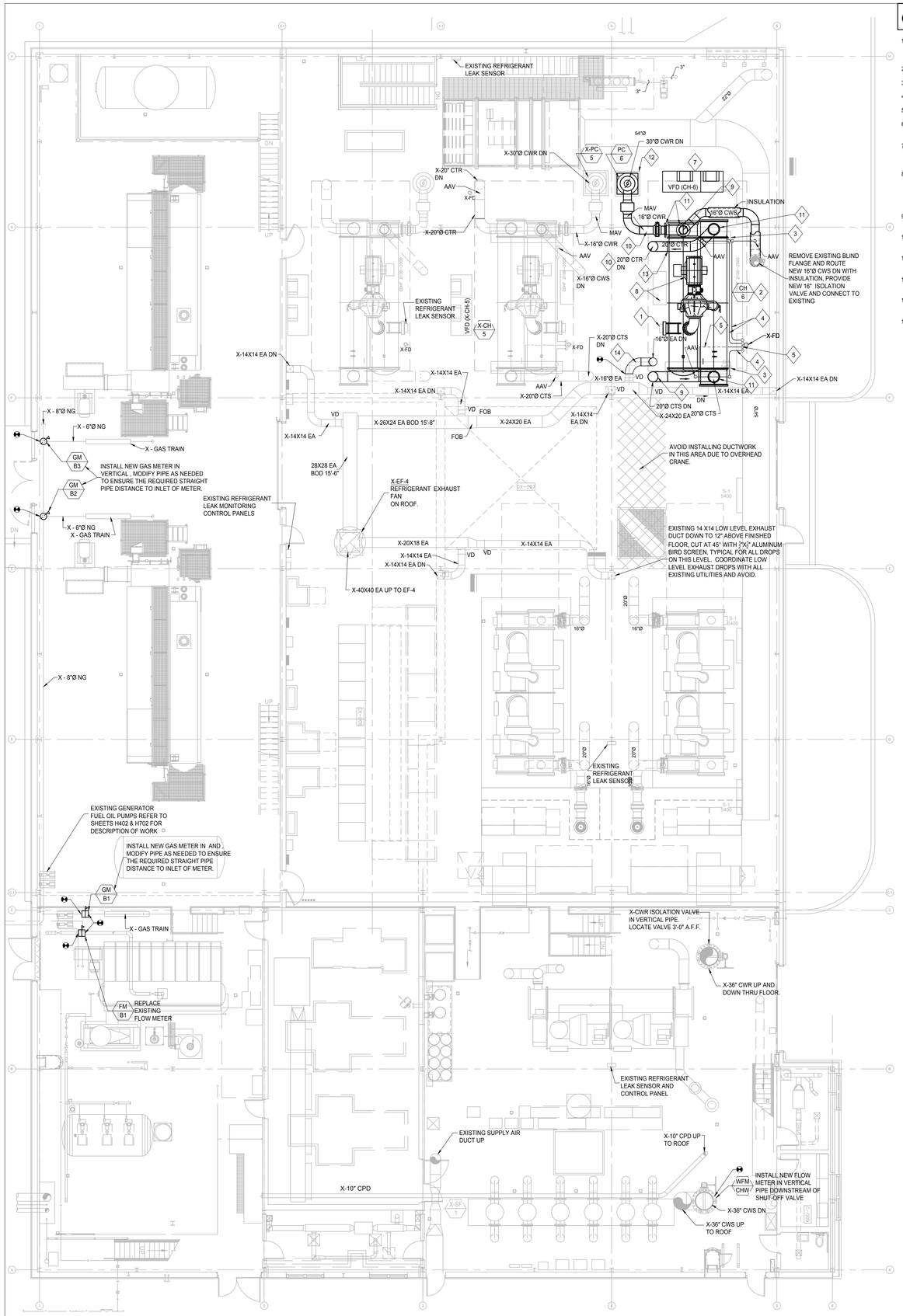


2 **C.U.P HVAC PLAN CUP BUILDING FIRST FLOOR - LOWER LEVEL**
SCALE: 1/8" = 1'-0"

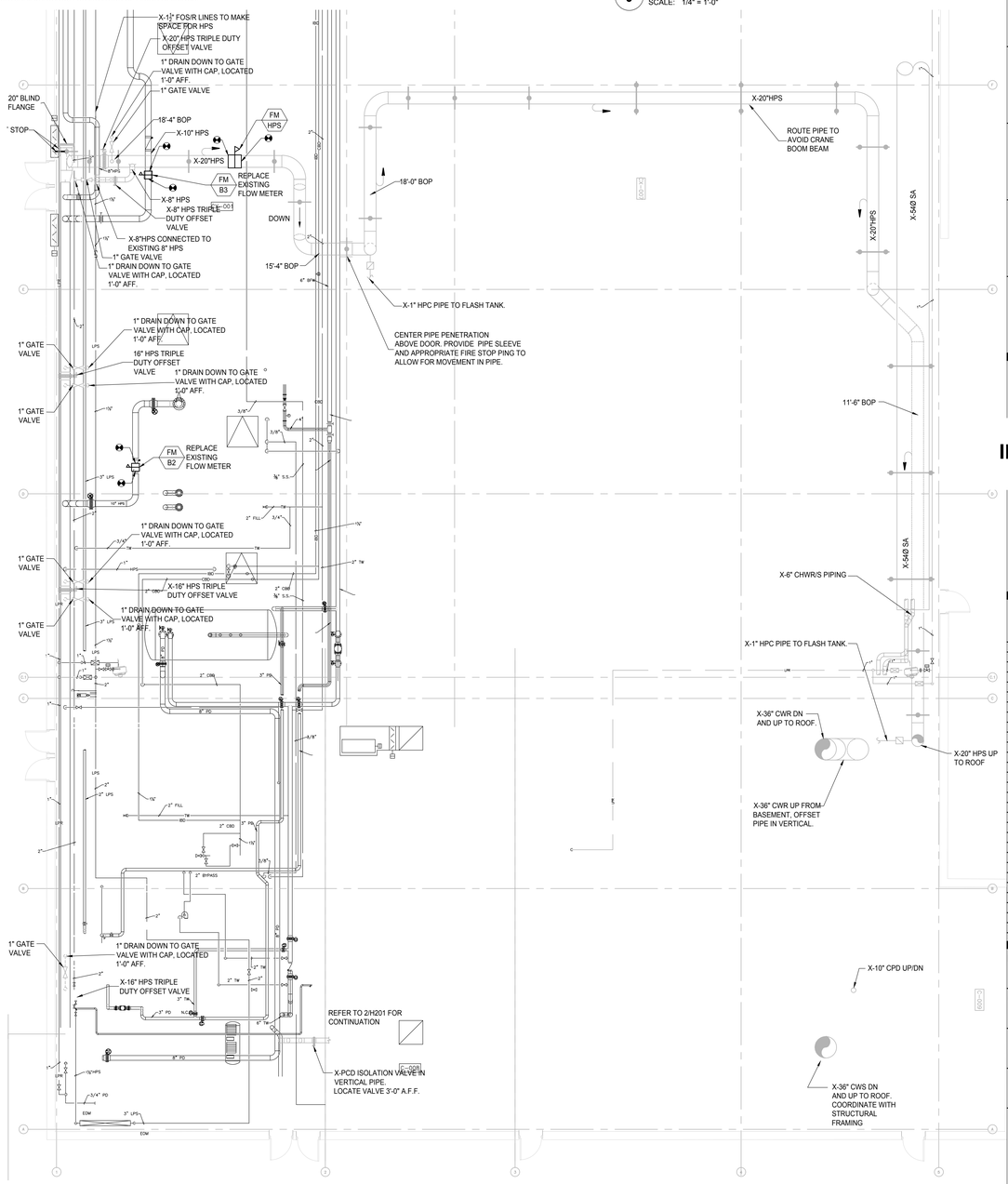


1 **C.U.P HVAC PLAN CUP BUILDING FIRST FLOOR - UPPER LEVEL**
SCALE: 1/8" = 1'-0"


CHAMPLIN ARCHITECTURE
720 E Pete Rose Way, Suite 140
Cincinnati, OH 45202
T 513.241.4474 F 513.241.0081
thinkchamplin.com
THINK CREATE REALIZE

Affiliated Engineers

THP

UNIVERSITY OF KENTUCKY


# CAMPUS INFRASTRUCTURE & C.U.P.

BID PACKAGE 8

University of Kentucky

LEXINGTON, KENTUCKY

**ISSUANCES**

| No. | Description | Date |
|---|---|---|
| 1 | Issued for Bid and Permit | 01/12/18 |

| | |
|---|---|
| Drawn By: CS | |
| Checked By: CA | |
| Client Number: 514 | |
| Project Number: 5601 | |

COMMONWEALTH OF KENTUCKY — CHRISTOPHER SCOTT ANDERSON — LICENSED PROFESSIONAL ENGINEER — 01/30/2019

HVAC PLAN CUP BUILDING FIRST FLOOR

H201.8

## KEYNOTES:

1. REFER TO DWG. H301.8 FOR CONTINUATION.
2. PROVIDE 4" HIGH CONCRETE HOUSEKEEPING PAD.
3. CONTRACTOR SHALL CUT OPENING IN EX SUMP COVER - DIAMETER SHALL BE 2" GREATER THAN OUTER DIAMETER OF INSULATION.
4. CONTRACTOR TO FIELD VERIFY PIPE ROUTING OF NEW VENT PIPING PRIOR TO INSTALLATION.
5. BALANCE TO CONTINUOUS BLOWDOWN HEAT EXCHANGER - WATER SIDE MINIMUM FLOW RATE LISTED IN MECHANICAL SCHEDULE ON SHEET H501.8
6. PROVIDE PIPE AND FITTING TYPE TO MATCH EXISTING AT POINT OF CONNECTION UPSTREAM OF DIELECTRIC UNION. CONTRACTOR TO COORDINATE SYSTEM SHUTDOWN AND METHOD OF CONNECTION.

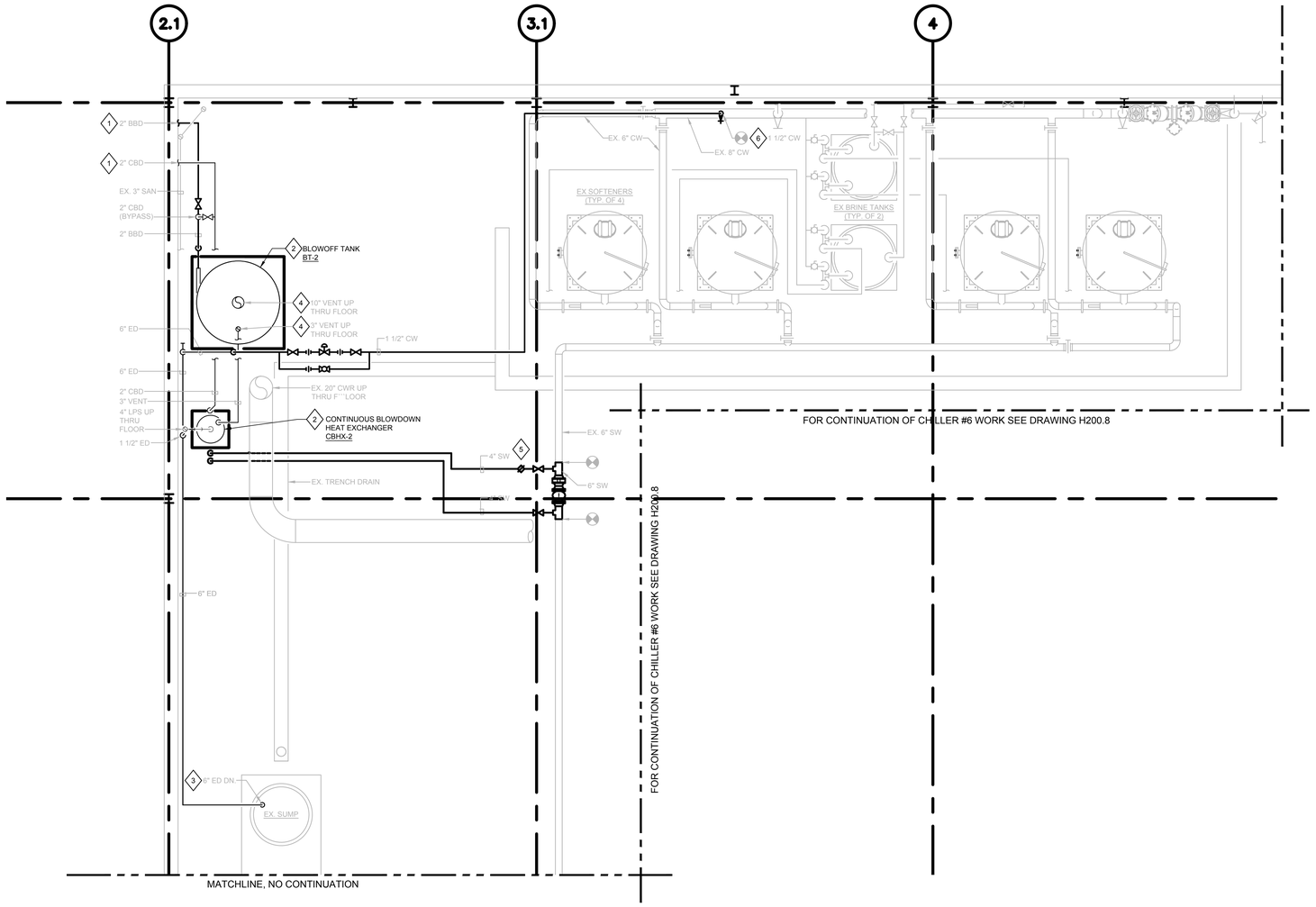


1 ENLARGED HVAC BASEMENT PLAN
SCALE: 1/4" = 1'-0"

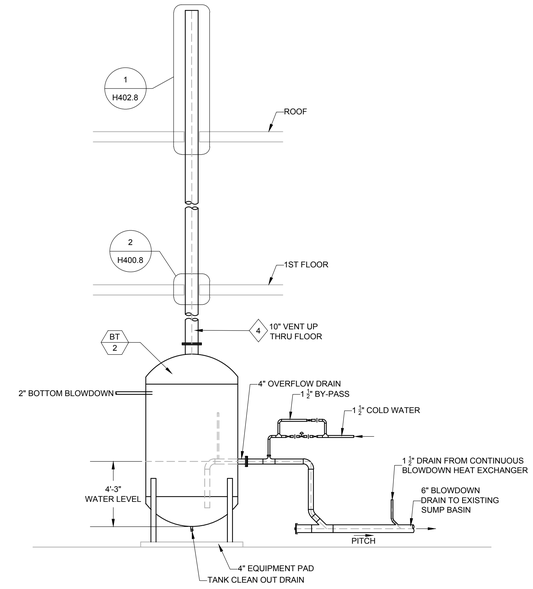


2 BLOWDOWN TANK BT-2 ELEVATION
SCALE: 1/4" = 1'-0"


CHAMPLIN ARCHITECTURE
720 E Pete Rose Way, Suite 140
Cincinnati, OH 45202
T 513.241.4474 F 513.241.0081
thinkchamplin.com
THINK CREATE REALIZE


AEI Affiliated Engineers

THP

UNIVERSITY OF KENTUCKY

**CAMPUS INFRASTRUCTURE & C.U.P.**

BID PACKAGE 8

University of Kentucky

LEXINGTON, KENTUCKY

**ISSUANCES**

| No. | Description | Date |
|---|---|---|
| 1 | Issued for Bid and Permit | 01/12/18 |

Drawn By CA

Checked By CA

Client Number 514

Project Number 5601

STATE OF KENTUCKY SCOTT LICENSED 31321 PROFESSIONAL ENGINEER 06/30/2019

ENLARGED HVAC BASEMENT PLAN

H300.8

## KEYNOTES:

1. PROVIDE WELDOLET AND HOT TAP.
2. PIPE ROUTED INTO BASEMENT LEVEL - REFER TO DWG. H300.8 FOR CONTINUATION.
3. PROVIDE PIPING COLLAR / WATERSTOP AT PENETRATION THROUGH FLOOR PER DETAIL ON SHEET H401.8
4. CONTRACTOR TO FIELD VERIFY PIPE ROUTING OF NEW VENT PIPING PRIOR TO FABRICATION AND INSTALLATION.

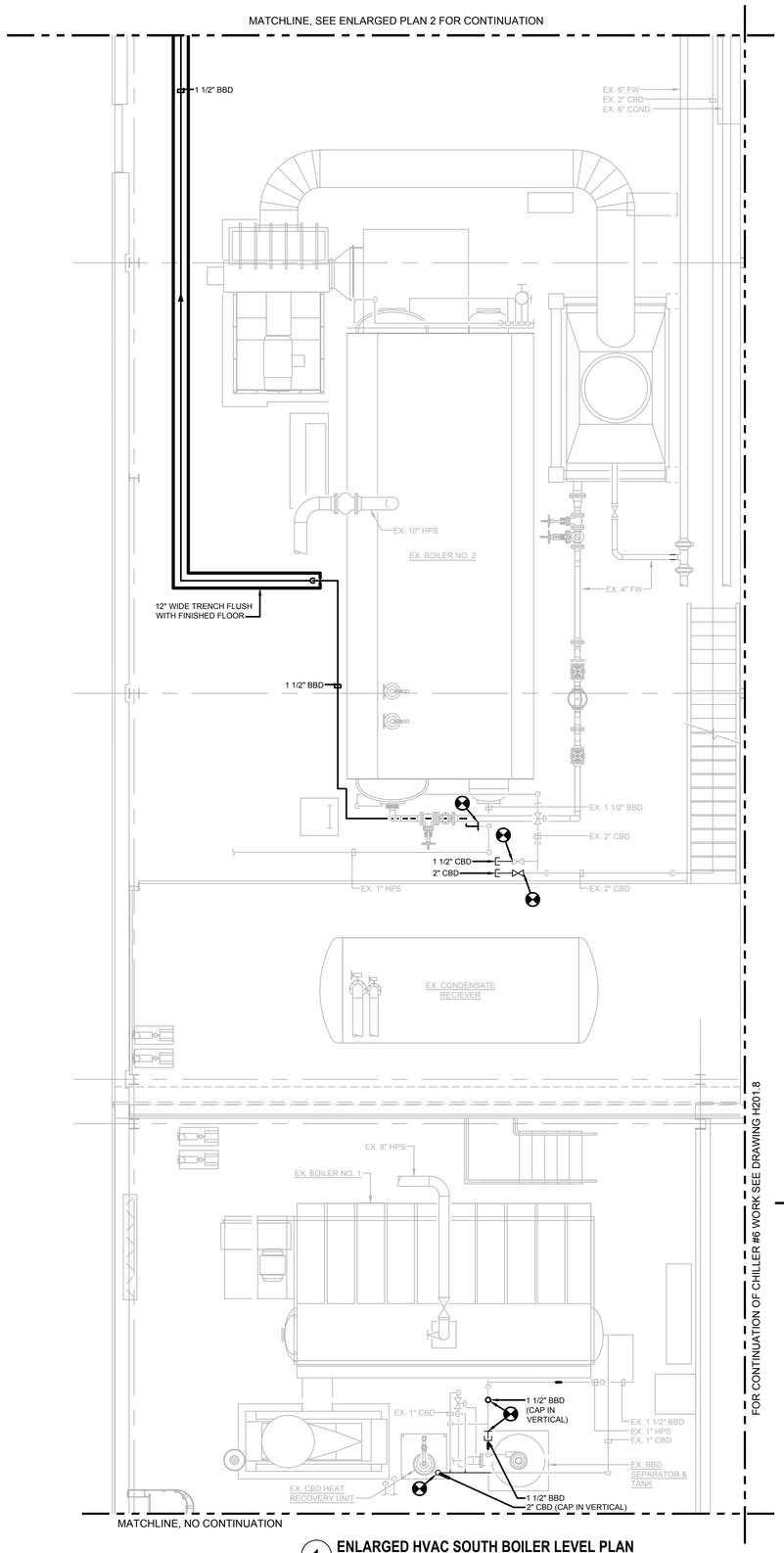


1 **ENLARGED HVAC SOUTH BOILER LEVEL PLAN**
SCALE: 1/4" = 1'-0"

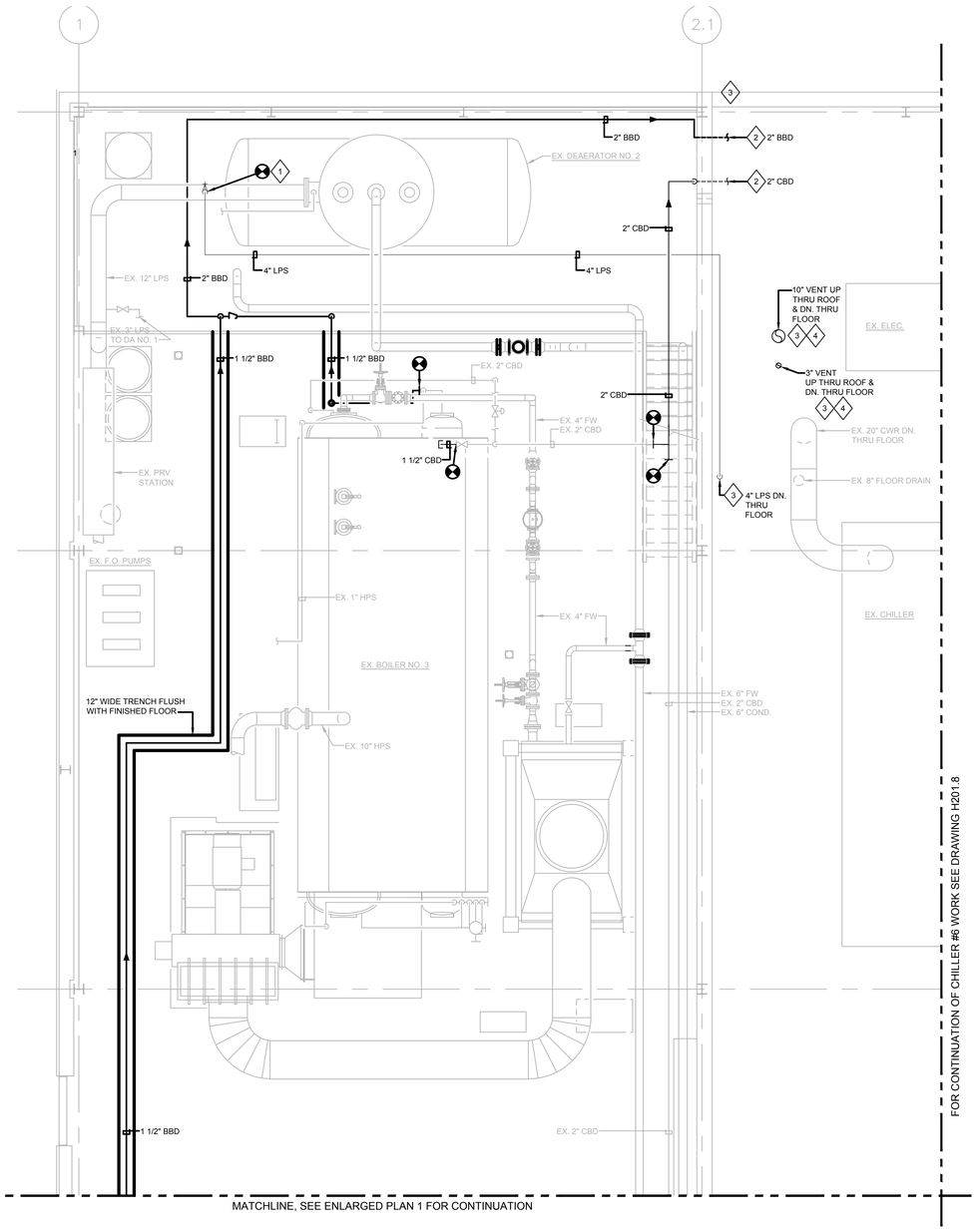


2 **ENLARGED HVAC NORTH BOILER LEVEL PLAN**
SCALE: 1/4" = 1'-0"


CHAMPLIN ARCHITECTURE
720 E Pete Rose Way, Suite 140
Cincinnati, OH 45202
T 513.241.4474 F 513.241.0081
thinkchamplin.com
THINK CREATE REALIZE


AEI Affiliated Engineers

THP

UNIVERSITY OF KENTUCKY

**CAMPUS INFRASTRUCTURE & C.U.P.**

BID PACKAGE 8

University of Kentucky

LEXINGTON, KENTUCKY

**ISSUANCES**

| No. | Description | Date |
|---|---|---|
| 1 | Issued for Bid and Permit | 01/12/18 |

| | |
|---|---|
| Drawn By | CA |
| Checked By | CA |
| Client Number | 514 |
| Project Number | 5601 |

STATE OF KENTUCKY SCOTT ... 31321 LICENSED PROFESSIONAL ENGINEER 06/30/2019

ENLARGED HVAC BOILER LEVEL PLANS

H301.8

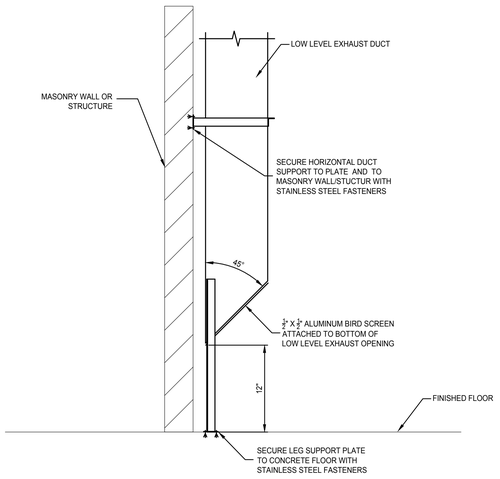


**10 LOW LEVEL REFRIGERANT EXHAUST DUCT DETAIL**
SCALE: NONE

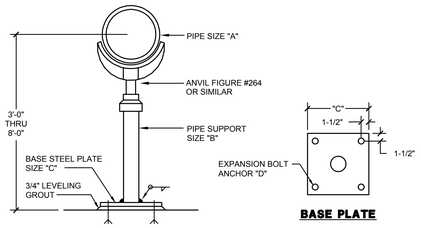


**BASE PLATE**

| "A" | "B" | "C" | "D" | MAX. WEIGHT (LB.) |
|---|---|---|---|---|
| 3 | 2-1/2 | 1/2 X 9 X 9 | 3/8 | 170 |
| 4 | 3 | 1/2 X 9 X 9 | 1/2 | 330 |
| 6 | 4 | 3/4 X 10 X 10 | 1/2 | 780 |
| 8 | 4 | 3/4 X 10 X 10 | 1/2 | 1240 |
| 10 | 6 | 7/8 X 12 X 12 | 3/4 | 2200 |
| 12 | 6 | 7/8 X 12 X 12 | 3/4 | 2280 |
| 14 | 6 | 7/8 X 12 X 12 | 3/4 | 2640 |
| 16 | 6 | 7/8 X 12 X 12 | 3/4 | 3260 |
| 18 | 10 | 1 X 16 X 16 | 1 | 4940 |
| 20 | 10 | 1 X 16 X 16 | 1 | 5890 |
| 24 | 10 | 1 X 16 X 16 | 1 | 8010 |
| 30 | 12 | 1 X 16 X 16 | 1 | 13000 |
| 36 | 12 | 1 X 16 X 16 | 1 | 13000 |

NOTES:
(1) ALL DIMENSIONS IN INCHES.
(2) CONCRETE FLOOR SLAB TO HAVE MIN. 3500 PSI.
(3) SUPPORT PIPE TO BE ASME A53, GRADE B, TYPE E OR S, STANDARD WEIGHT, CARBON STEEL.
(4) EXPANSION BOLTS TO HAVE ICBO OR EQUIVALENT LISTING.

**7 PIPE SUPPORT**
SCALE: NONE (PIPE HEIGHT BETWEEN 3'-0" AND 8'-0")

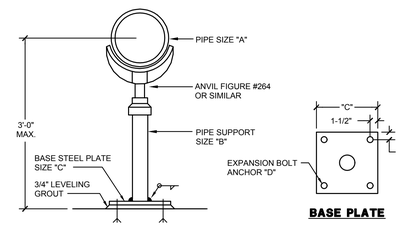


**BASE PLATE**

| "A" | "B" | "C" | "D" | MAX. WEIGHT (LB.) |
|---|---|---|---|---|
| 3 | 2-1/2 | 1/2 X 9 X 9 | 3/8 | 170 |
| 4 | 3 | 1/2 X 9 X 9 | 3/8 | 330 |
| 6 | 3 | 1/2 X 9 X 9 | 3/8 | 780 |
| 8 | 3 | 1/2 X 9 X 9 | 3/8 | 1240 |
| 10 | 4 | 3/4 X 10 X 10 | 1/2 | 2200 |
| 12 | 4 | 3/4 X 10 X 10 | 1/2 | 2280 |
| 14 | 4 | 3/4 X 10 X 10 | 1/2 | 2640 |
| 16 | 4 | 3/4 X 10 X 10 | 1/2 | 3260 |
| 18 | 6 | 7/8 X 12 X 12 | 1/2 | 4940 |
| 20 | 6 | 7/8 X 12 X 12 | 1/2 | 5890 |
| 24 | 6 | 7/8 X 12 X 12 | 1/2 | 8010 |
| 30 | 8 | 7/8 X 14 X 14 | 3/4 | 13000 |
| 36 | 8 | 7/8 X 14 X 14 | 3/4 | 13000 |

NOTES:
(1) ALL DIMENSIONS IN INCHES.
(2) CONCRETE FLOOR SLAB TO HAVE MIN. 3500 PSI.
(3) SUPPORT PIPE TO BE ASME A53, GRADE B, TYPE E OR S, STANDARD WEIGHT, CARBON STEEL.
(4) EXPANSION BOLTS TO HAVE ICBO OR EQUIVALENT LISTING.

**4 PIPE SUPPORT**
SCALE: NONE (MAXIMUM PIPE HEIGHT = 3'-0")

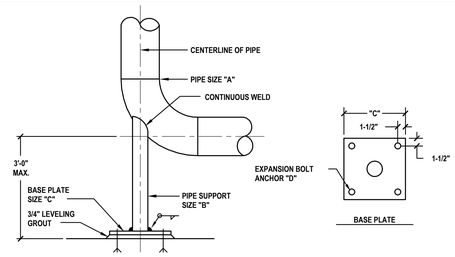


**BASE PLATE**

| "A" | "B" | "C" | "D" |
|---|---|---|---|
| 6 | 3 | 1/2 X 9 X 9 | 3/8 |
| 8 | 3 | 1/2 X 9 X 9 | 3/8 |
| 10 | 4 | 3/4 X 10 X 10 | 1/2 |
| 12 | 4 | 3/4 X 10 X 10 | 1/2 |
| 14 | 4 | 3/4 X 10 X 10 | 1/2 |
| 16 | 4 | 3/4 X 10 X 10 | 1/2 |
| 18 | 6 | 7/8 X 12 X 12 | 1/2 |
| 20 | 6 | 7/8 X 12 X 12 | 1/2 |
| 24 | 6 | 7/8 X 12 X 12 | 1/2 |
| 30 | 8 | 7/8 X 14 X 14 | 3/4 |

NOTES:
(1) ALL DIMENSIONS IN INCHES.
(2) CONCRETE FLOOR SLAB TO HAVE MIN. 3500 PSI.
(3) SUPPORT PIPE TO BE ASME A53, GRADE B, TYPE E OR S, STANDARD WEIGHT, CARBON STEEL.
(4) EXPANSION BOLTS TO HAVE ICBO OR EQUIVALENT LISTING.

**1 PIPE SUPPORT**
SCALE: NONE

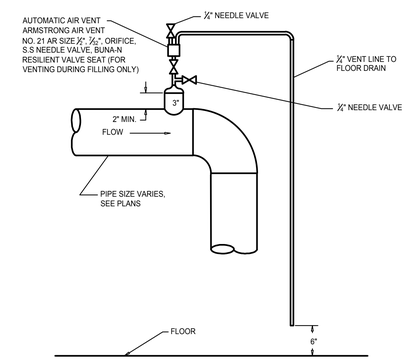


**8 AUTOMATIC AIR VENT DETAIL - PIPES 4" AND LARGER**
SCALE: NONE

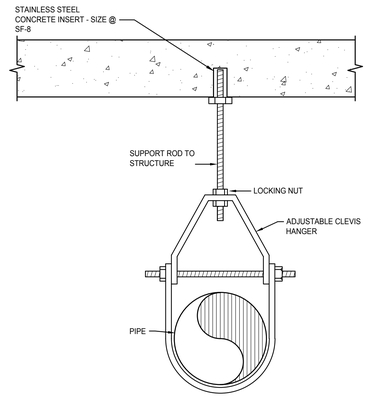


**A WITHOUT PIPE INSULATION**
SCALE: NONE

**5 PIPE HANGER DETAIL - 8" AND BELOW**
SCALE: NONE

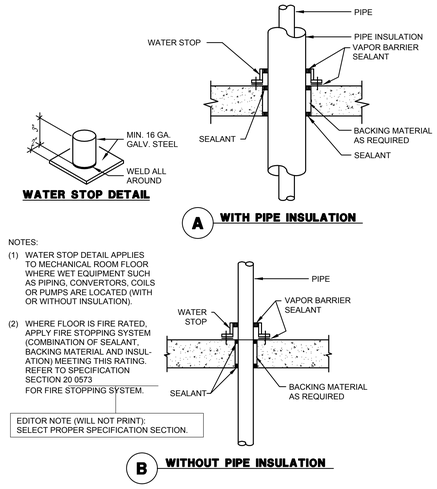


**WATER STOP DETAIL**

**A WITH PIPE INSULATION**

NOTES:
(1) WATER STOP DETAIL APPLIES TO MECHANICAL ROOM FLOOR WHERE WET EQUIPMENT SUCH AS PIPING, CONVERTORS, COILS OR PUMPS ARE LOCATED (WITH OR WITHOUT INSULATION).
(2) WHERE FLOOR IS FIRE RATED, APPLY FIRE STOPPING SYSTEM (COMBINATION OF SEALANT, BACKING MATERIAL AND INSULATION) MEETING THIS RATING. REFER TO SPECIFICATION SECTION 20 0573 FOR FIRE STOPPING SYSTEM.

EDITOR NOTE (WILL NOT PRINT): SELECT PROPER SPECIFICATION SECTION.




**B WITHOUT PIPE INSULATION**

**2 PIPE THRU MECHANICAL ROOM FLOOR**
SCALE: NONE

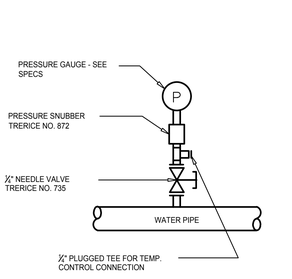


**9 WATER PRESSURE GAUGE INSTALLATION**
SCALE: NONE

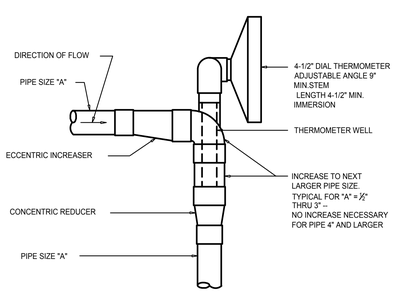


**6 PIPE THERMOMETER INSTALLATION DETAIL**
SCALE: NONE

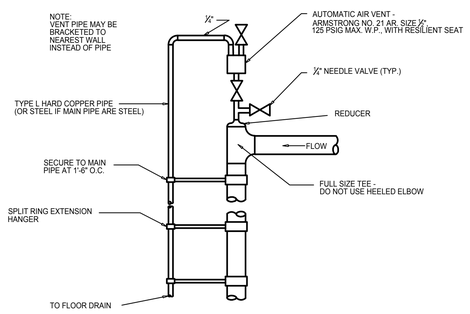


**3 AUTOMATIC AIR VENT DETAILS - 3" & SMALLER**
SCALE: NONE

CHAMPLIN ARCHITECTURE
720 E Pete Rose Way, Suite 140
Cincinnati, OH 45202
T 513.241.4474 F 513.241.0081
thinkchamplin.com
THINK CREATE REALIZE

Affiliated Engineers

THP

UNIVERSITY OF KENTUCKY

# CAMPUS INFRASTRUCTURE & C.U.P.

BID PACKAGE 8

University of Kentucky

LEXINGTON, KENTUCKY

**ISSUANCES**

| No. | Description | Date |
|---|---|---|
| 1 | Issued for Bid and Permit | 01/12/18 |

| | |
|---|---|
| Drawn By | CS |
| Checked By | CA |
| Client Number | 514 |
| Project Number | 5601 |

STATE OF KENTUCKY SCOTT A. SMITH 31751 LICENSED PROFESSIONAL ENGINEER 01/30/2019

HVAC DETAILS

H400.8

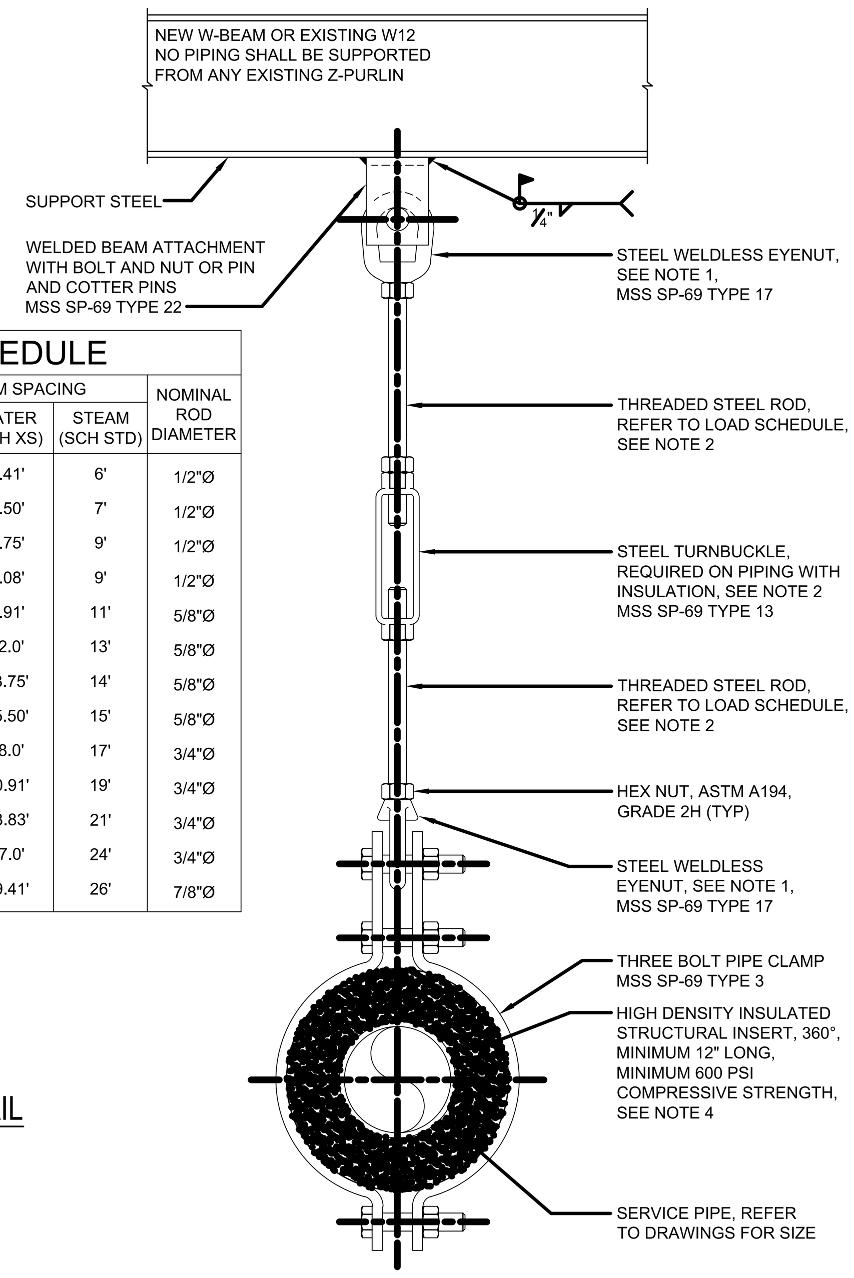


LOAD SCHEDULE

| NOMINAL PIPE DIAMETER | MAX LOAD (LBS) | MAXIMUM SPACING WATER (SCH STD) | MAXIMUM SPACING WATER (SCH XS) | MAXIMUM SPACING STEAM (SCH STD) | NOMINAL ROD DIAMETER |
|---|---|---|---|---|---|
| ½"Ø | 950 | 5' | 5.41' | 6' | 1/2"Ø |
| ¾"Ø | 950 | 6' | 6.50' | 7' | 1/2"Ø |
| 1"Ø | 950 | 7' | 7.75' | 9' | 1/2"Ø |
| 1¼"Ø | 950 | 8' | 9.08' | 9' | 1/2"Ø |
| 1½"Ø | 1,545 | 9' | 9.91' | 11' | 5/8"Ø |
| 2"Ø | 1,545 | 10' | 12.0' | 13' | 5/8"Ø |
| 2½"Ø | 1,545 | 11' | 13.75' | 14' | 5/8"Ø |
| 3"Ø | 1,545 | 12' | 15.50' | 15' | 5/8"Ø |
| 4"Ø | 2,500 | 14' | 18.0' | 17' | 3/4"Ø |
| 5"Ø | 2,500 | 16' | 20.91' | 19' | 3/4"Ø |
| 6"Ø | 2,865 | 17' | 23.83' | 21' | 3/4"Ø |
| 8"Ø | 2,865 | 19' | 27.0' | 24' | 3/4"Ø |
| 10"Ø | 3,240 | 22' | 29.41' | 26' | 7/8"Ø |

5 THREE BOLT PIPE CLAMP DETAIL
SCALE: NOT TO SCALE

5 THREE BOLT PIPE CLAMP DETAIL
SCALE: NOT TO SCALE

NOTES:

1. THE STEEL WELDLESS EYENUTS SHALL BE INSTALLED TO PIVOT IN OPPOSITE DIRECTIONS.
2. THE USE OF A TURNBUCKLE WILL REQUIRE THE INSTALLATION AND USE OF BOTH LEFT HANDED AND RIGHT HANDED THREADED STEEL RODS.
3. PIPE SIZES NOT INDICATED IN THE LOAD SCHEDULE WILL NOT BE PERMISSIBLE.
4. THE THICKNESS OF THE INSERT SHALL BE AS REQUIRED TO FIT THE SUPPORT, BUT NOT LESS THAN THE PIPING SYSTEM SUPPORTED. INSERTS SHALL BE TREATED WITH WATER REPELLANT.
5. ALL COMPONENTS LOCATED OUTSIDE SHALL BE GALVANIZED.

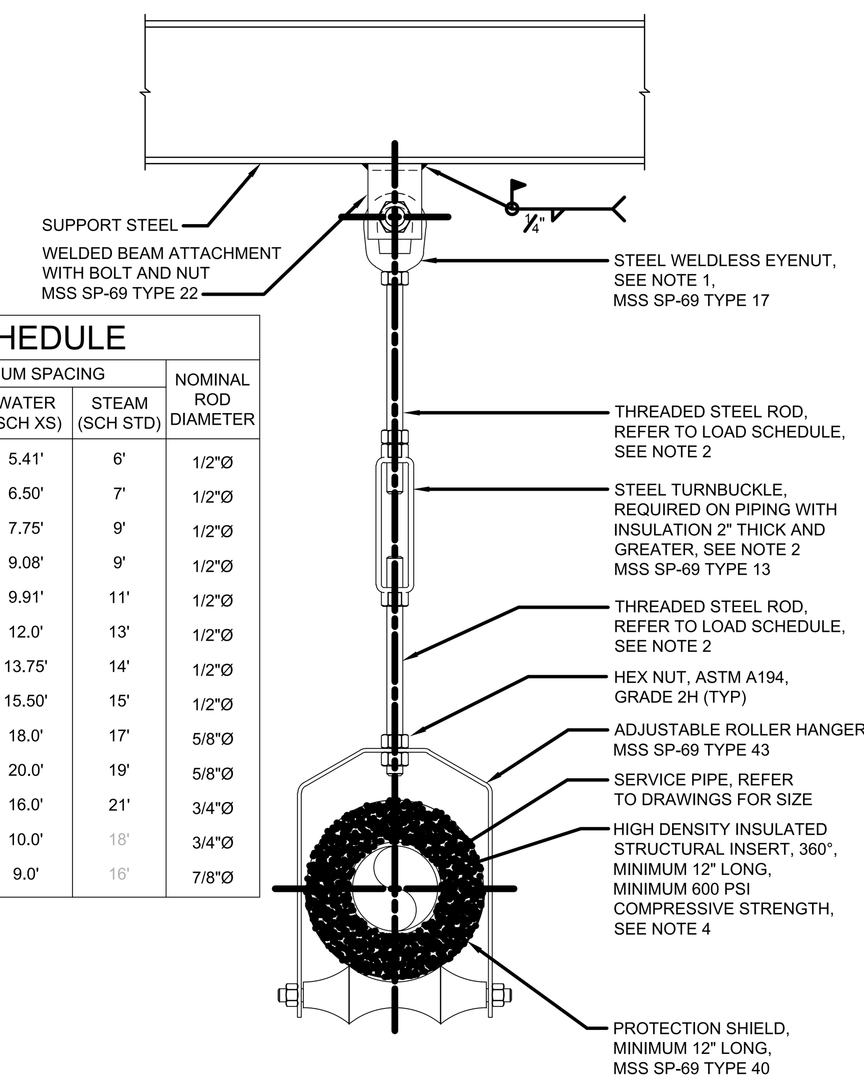


LOAD SCHEDULE

| NOMINAL PIPE DIAMETER | MAX LOAD (LBS) | MAXIMUM SPACING WATER (SCH STD) | MAXIMUM SPACING WATER (SCH XS) | MAXIMUM SPACING STEAM (SCH STD) | NOMINAL ROD DIAMETER |
|---|---|---|---|---|---|
| ½"Ø | 225 | 5' | 5.41' | 6' | 1/2"Ø |
| ¾"Ø | 225 | 6' | 6.50' | 7' | 1/2"Ø |
| 1"Ø | 225 | 7' | 7.75' | 9' | 1/2"Ø |
| 1¼"Ø | 225 | 8' | 9.08' | 9' | 1/2"Ø |
| 1½"Ø | 225 | 9' | 9.91' | 11' | 1/2"Ø |
| 2"Ø | 225 | 10' | 12.0' | 13' | 1/2"Ø |
| 2½"Ø | 225 | 11' | 13.75' | 14' | 1/2"Ø |
| 3"Ø | 310 | 12' | 15.50' | 15' | 1/2"Ø |
| 4"Ø | 390 | 14' | 18.0' | 17' | 5/8"Ø |
| 5"Ø | 685 | 16' | 20.0' | 19' | 5/8"Ø |
| 6"Ø | 780 | 17' | 16.0' | 21' | 3/4"Ø |
| 8"Ø | 780 | 13' | 10.0' | 18' | 3/4"Ø |
| 10"Ø | 965 | 10' | 9.0' | 16' | 7/8"Ø |

4 ADJUSTABLE ROLLER HANGER DETAIL
SCALE: NOT TO SCALE

NOTES:

1. THE STEEL WELDLESS EYENUT SHALL BE INSTALLED TO PIVOT IN OPPOSITE DIRECTION OF ROLLER.
2. THE USE OF A TURNBUCKLE WILL REQUIRE THE INSTALLATION AND USE OF BOTH LEFT HANDED AND RIGHT HANDED THREADED STEEL RODS.
3. PIPE SIZES NOT INDICATED IN THE LOAD SCHEDULE WILL NOT BE PERMISSIBLE.
4. THE THICKNESS OF THE INSERT SHALL BE AS REQUIRED TO FIT THE SUPPORT, BUT NOT LESS THAN THE PIPING SYSTEM SUPPORTED. INSERTS SHALL BE TREATED WITH WATER REPELLANT.
5. ALL COMPONENTS LOCATED OUTSIDE SHALL BE GALVANIZED.
6. THIS DETAIL SHALL BE USED AS A GUIDE. ALL COMPONENTS SHALL MEET THE REQUIREMENTS OF THE SPECIFICATIONS.
7. SEISMIC PROVISIONS SHALL BE REQUIRED, REFER TO SPECIFICATIONS.

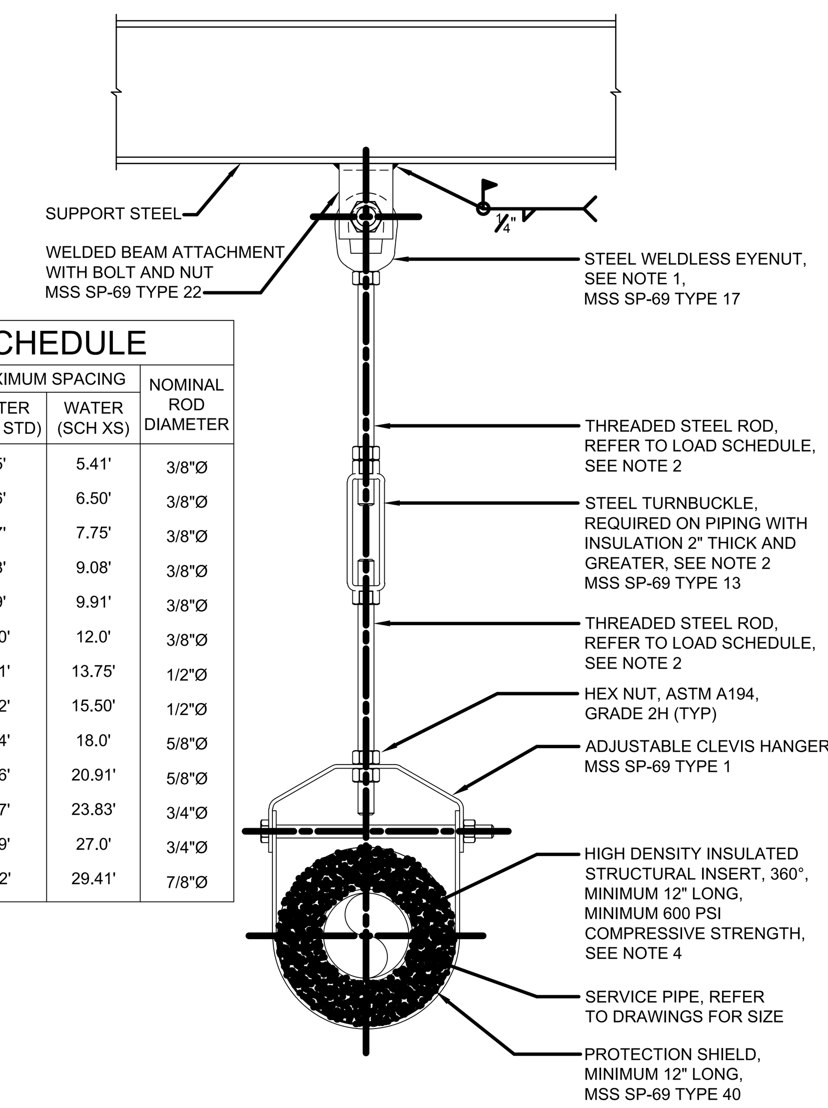


LOAD SCHEDULE

| NOMINAL PIPE DIAMETER | MAX LOAD (LBS) | MAXIMUM SPACING WATER (SCH STD) | MAXIMUM SPACING WATER (SCH XS) | NOMINAL ROD DIAMETER |
|---|---|---|---|---|
| ½"Ø | 610 | 5' | 5.41' | 3/8"Ø |
| ¾"Ø | 610 | 6' | 6.50' | 3/8"Ø |
| 1"Ø | 730 | 7' | 7.75' | 3/8"Ø |
| 1¼"Ø | 730 | 8' | 9.08' | 3/8"Ø |
| 1½"Ø | 730 | 9' | 9.91' | 3/8"Ø |
| 2"Ø | 730 | 10' | 12.0' | 3/8"Ø |
| 2½"Ø | 1,350 | 11' | 13.75' | 1/2"Ø |
| 3"Ø | 1,350 | 12' | 15.50' | 1/2"Ø |
| 4"Ø | 1,430 | 14' | 18.0' | 5/8"Ø |
| 5"Ø | 1,430 | 16' | 20.91' | 5/8"Ø |
| 6"Ø | 1,940 | 17' | 23.83' | 3/4"Ø |
| 8"Ø | 2,000 | 19' | 27.0' | 3/4"Ø |
| 10"Ø | 3,600 | 22' | 29.41' | 7/8"Ø |

1 ADJUSTABLE CLEVIS HANGER DETAIL
SCALE: NOT TO SCALE

NOTES:

1. THE STEEL WELDLESS EYENUT SHALL BE INSTALLED TO PIVOT IN DIRECTION OF GREATER MOVEMENT.
2. THE USE OF A TURNBUCKLE WILL REQUIRE THE INSTALLATION AND USE OF BOTH LEFT HANDED AND RIGHT HANDED THREADED STEEL RODS.
3. PIPE SIZES NOT INDICATED IN THE LOAD SCHEDULE WILL NOT BE PERMISSIBLE.
4. THE THICKNESS OF THE INSERT SHALL BE AS REQUIRED TO FIT THE SUPPORT, BUT NOT LESS THAN THE PIPING SYSTEM SUPPORTED. INSERTS SHALL BE TREATED WITH WATER REPELLANT.
5. ALL COMPONENTS LOCATED OUTSIDE SHALL BE GALVANIZED.
6. THIS DETAIL SHALL BE USED AS A GUIDE. ALL COMPONENTS SHALL MEET THE REQUIREMENTS OF THE SPECIFICATIONS.
7. SEISMIC PROVISIONS SHALL BE REQUIRED, REFER TO SPECIFICATIONS.

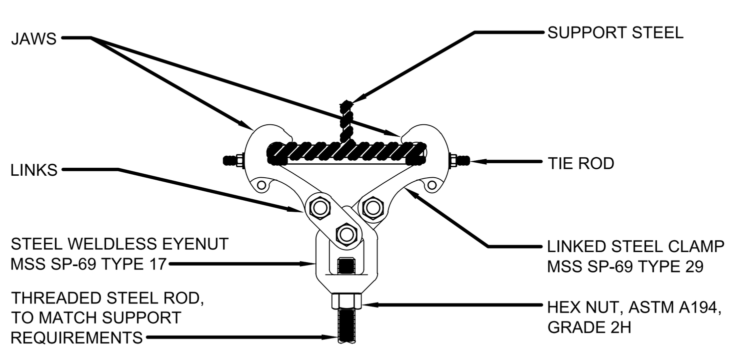


7 BEAM ATTACHMENT DETAIL
SCALE: NOT TO SCALE

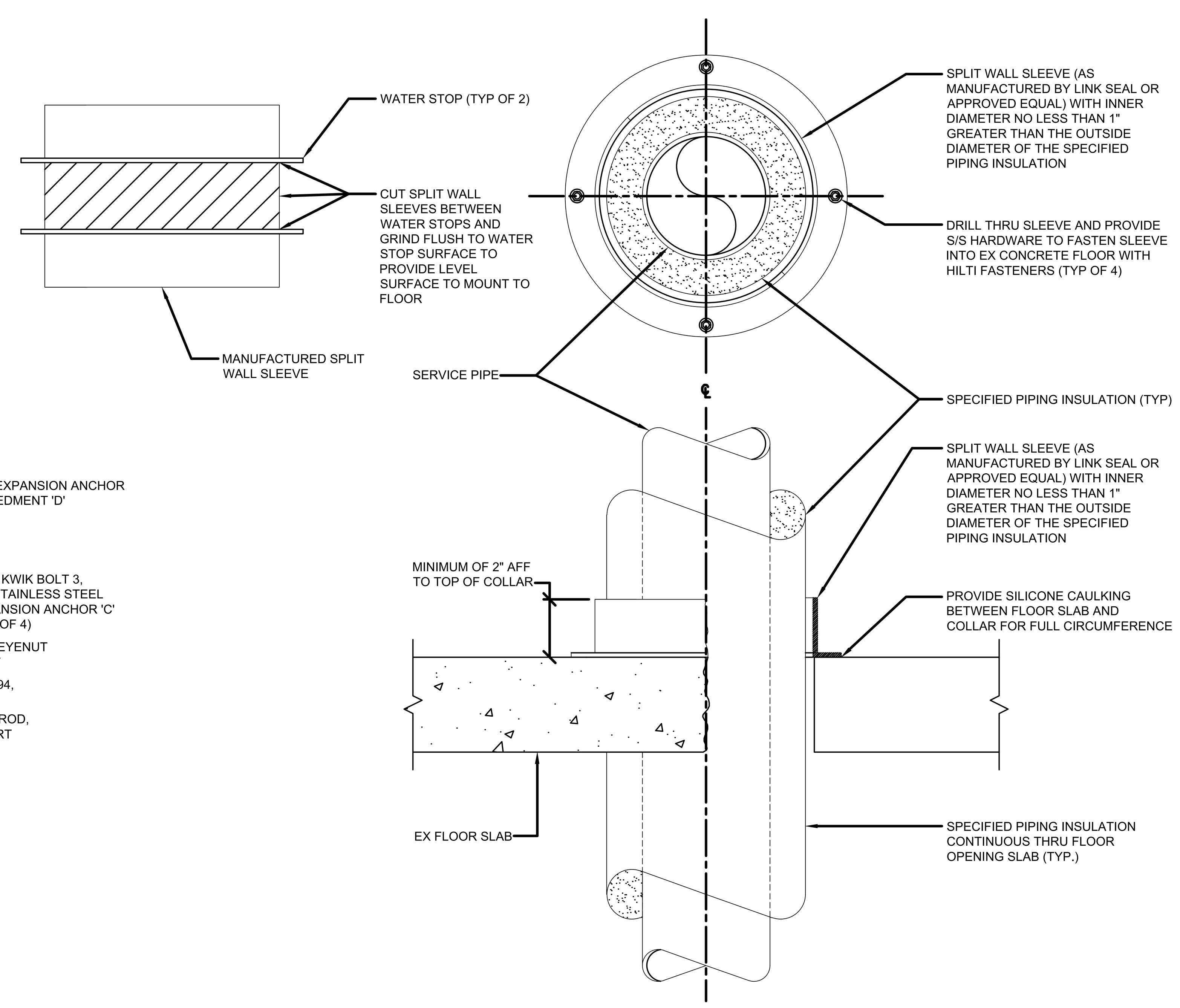


6 PIPING COLLAR / WATERSTOP DETAIL
SCALE: NOT TO SCALE

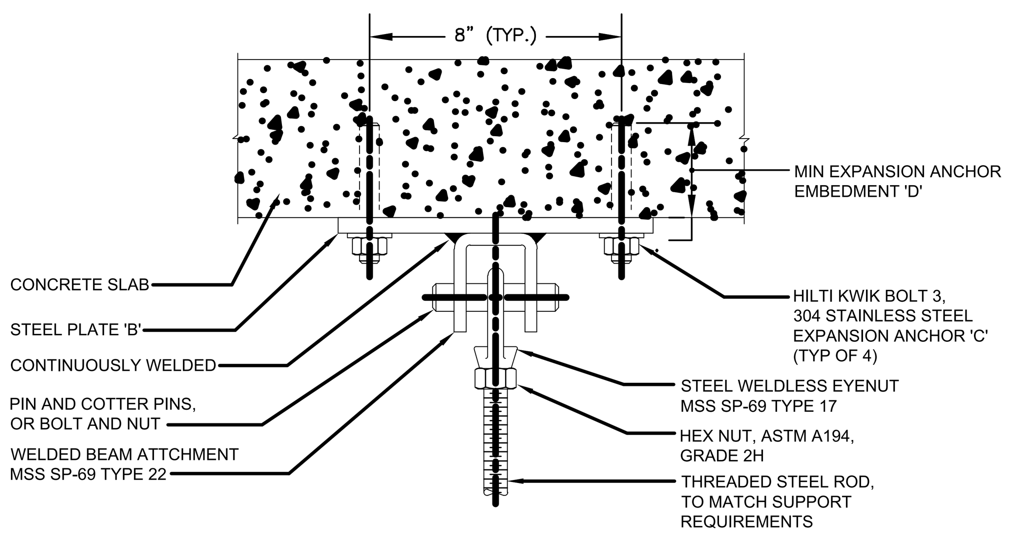


| 'A' ROD SIZE (DIAMETER) | MAXIMUM LOAD (LBS) | 'B' STEEL PLATE SIZE | 'C' ANCHOR BOLTS (DIA x L) | 'D' EMBEDMENT (INCHES) |
|---|---|---|---|---|
| 1/2" | 1,350 | 10"x10"x⅜" | ½"x5½" | 3½ |
| 5/8" | 2,160 | 10"x10"x½" | ½"x5½" | 3½ |
| 3/4" | 3,230 | 10"x10"x½" | ⅝"x6" | 4 |
| 7/8" | 4,480 | 10"x10"x½" | ⅝"x6" | 4 |
| 1" | 5,900 | 12"x12"x¾" | ¾"x7" | 5 |
| 1 1/4" | 9,500 | 12"x12"x¾" | ¾"x7" | 5 |
| 1 1/2" | 13,800 | 12"x12"x1" | 1"x9" | 6 |

8 HANGER ROD CONCRETE CEILING ATTACHMENT PLATE DETAIL
SCALE: NOT TO SCALE

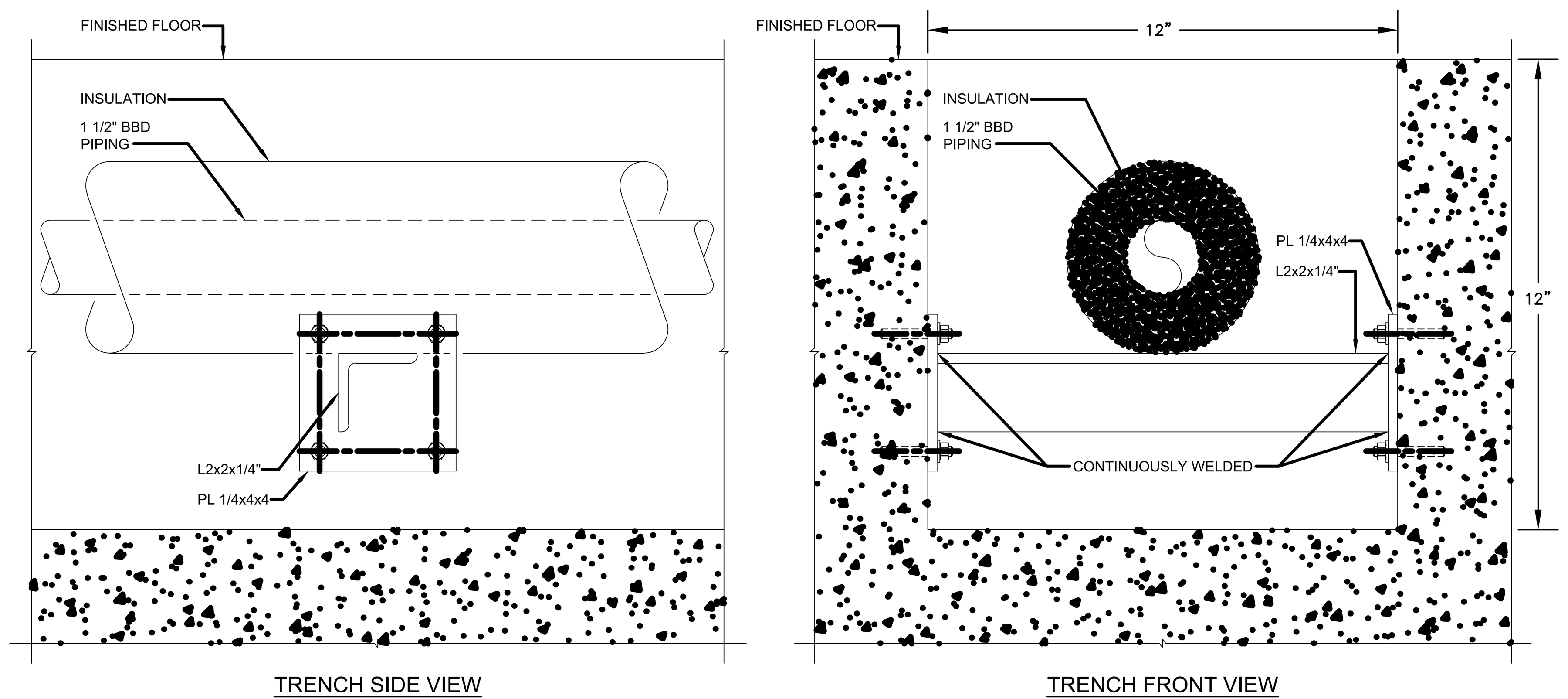


2 TRENCH PIPE SUPPORT DETAIL
SCALE: NOT TO SCALE

NOTES:

1. PROVIDE L2x2x1/4" SUPPORT WITH PL 1/4x4x4 END PLATES AND 1/2" DIAMETER EXPANSION BOLTS WITH MINIMUM 3-1/2" EMBEDMENT DEPTH.
2. PROVIDE ONE SUPPORT MINIMUM PER 8 LINEAR FEET.
3. SLOPE PIPING 1 INCH PER 40 FEET IN DIRECTION OF FLOW.
4. PROVIDE HIGH DENSITY INSULATED STRUCTURAL INSERT, 360°, MINIMUM 12" LONG, MINIMUM 600 PSI COMPRESSIVE STRENGTH AT EACH SUPPORT.

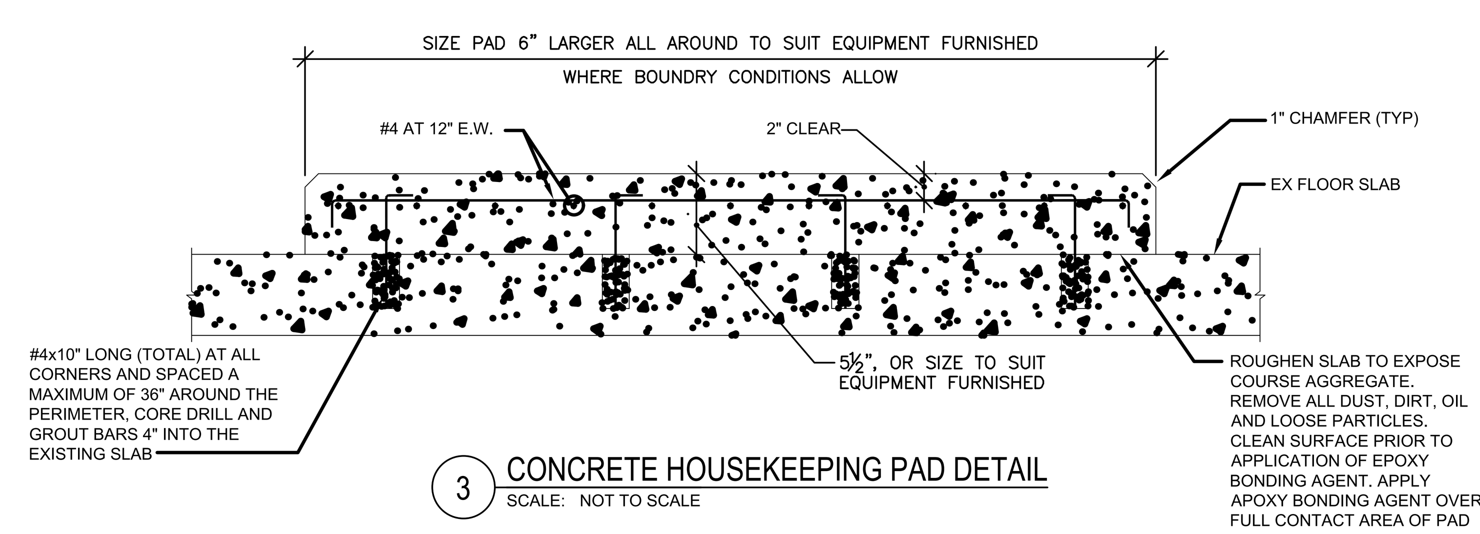


3 CONCRETE HOUSEKEEPING PAD DETAIL
SCALE: NOT TO SCALE

NOTES:

1. REFER TO DWG. S100 FOR CONCRETE AND REINFORCING REQUIREMENTS.

CHAMPLIN ARCHITECTURE
720 E Pete Rose Way, Suite 140
Cincinnati, OH 45202
T 513.241.4474 F 513.241.0081
thinkchamplin.com
THINK CREATE REALIZE
AEI Affiliated Engineers
THP
UNIVERSITY OF KENTUCKY

**CAMPUS INFRASTRUCTURE & C.U.P.**

BID PACKAGE 8
University of Kentucky

LEXINGTON, KENTUCKY

**ISSUANCES**

| No. | Description | Date |
|---|---|---|
| 1 | Issued for Bid and Permit | 01/12/18 |

Drawn By CA
Checked By CA
Client Number 514
Project Number 5601

STATE OF KENTUCKY SCOTT FOSTER 31321 LICENSED PROFESSIONAL ENGINEER 06/30/2019

HVAC DETAILS

H401.8

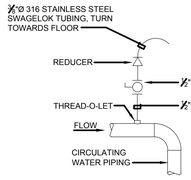


## 7 TYPICAL AIR VENT DETAIL
SCALE: NOT TO SCALE

NOTES:
1. VENT ALL HIGH POINTS AS INDICATED ABOVE.
2. IF AUTOMATIC AIR VENTS ARE USED, PIPE DISCHARGE TO DRAIN.

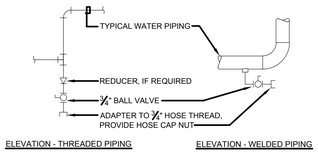


## 8 TYPICAL LIQUID DRAIN VALVE CONNECTION DETAIL
SCALE: NOT TO SCALE

NOTES:
1. DRAIN ALL LOW POINTS AS INDICATED ABOVE.
2. WHERE SCALE POCKETS ARE SHOWN ON PIPE RISER DIAGRAMS AND/OR PLANS, LOCATE DRAIN AT BOTTOM OF SCALE POCKET.

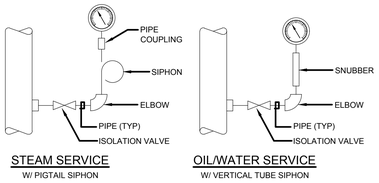


## 11 TYPICAL PRESSURE INDICATOR INSTALLATION DETAILS
SCALE: NOT TO SCALE

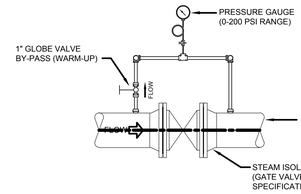


## 9 TYPICAL STEAM VALVE INSTALLATION DETAIL
SCALE: NOT TO SCALE

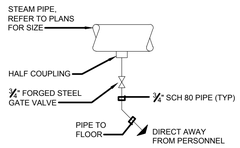


## 10 TYPICAL STEAM DRAIN VALVE CONNECTION DETAIL
SCALE: NOT TO SCALE

NOTES:
1. DRAIN ALL LOW POINTS AS INDICATED ABOVE.
2. WHERE DRIP LEGS ARE SHOWN, LOCATE DRAIN AT BOTTOM OF DRIP LEG.

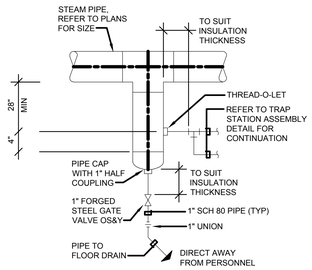


## 4 DRIP LEG DETAIL
SCALE: NOT TO SCALE

NOTES:
1. ALL DRIP LEGS SHALL BE FULL SIZE, UNLESS NOTED OTHERWISE.
2. ALL PIPING AND VALVE COMPONENTS SHOWN SHALL MATCH THE SPECIFICATIONS FOR THE SPECIFIC STEAM PIPING SYSTEM.
3. DRIP LEGS SHALL BE LOCATED AT ALL LOW POINTS IN THE SYSTEM.
4. DRIP LEGS SHALL BE LOCATED BEFORE AND AFTER ISOLATION VALVES.
5. DRAIN VALVES LOCATED IN PUBLIC AREAS SHALL BE LOCKABLE.

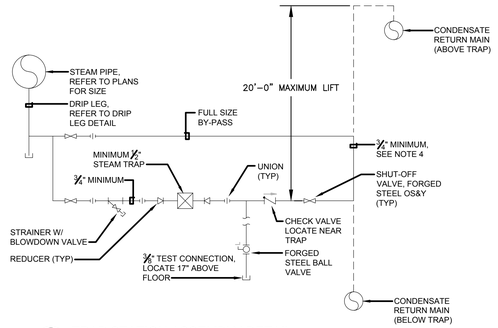


## 5 TRAP STATION ASSEMBLY DETAIL
SCALE: NOT TO SCALE

NOTES:
1. ALL TRAP STATION ASSEMBLY PIPING SHALL BE SCHEDULE 80 SEAMLESS STEEL, BLACK; ASTM A53 OR A106, GRADE B.
2. PROVIDE A TRAP STATION ASSEMBLY AT ALL STEAM UTILIZING EQUIPMENT AND LOW POINTS IN THE SYSTEM.
3. PROVIDE A TRAP STATION ASSEMBLY UPSTREAM AND DOWNSTREAM OF ALL MAIN STEAM ISOLATION VALVES.
4. TRAP STATION ASSEMBLY AND FULL SIZE BY-PASS SHALL BE INSTALLED AT THE SAME ELEVATION.
5. RETURN PIPING SHALL BE PIPED UTILIZING MULTIPLE ELBOWS TO PROVIDE ADEQUATE FLEXIBILITY FOR EXPANSION AND MOVEMENT.

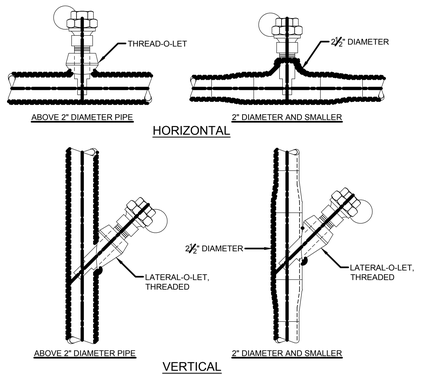


## 6 THERMOMETER WELL INSTALLATION DETAIL
SCALE: NOT TO SCALE

NOTES:
1. PROVIDE 6" EXTENDED NECK WELLS ON INSULATED PIPE.

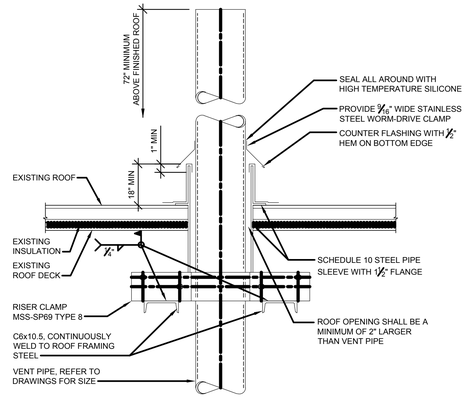


## 1 HOT VENT THROUGH ROOF DETAIL
SCALE: NOT TO SCALE

NOTES:
1. FLASHING AND COUNTER FLASHING SHALL BE 18 GAUGE ALUMINUM.
2. THE CONTRACTOR SHALL MATCH EXISTING ROOFING MATERIAL. THE WORK SHALL BE PERFORMED IN A MANNER AS RECOMMENDED BY THE CURRENT ROOFING MANUFACTURER SO AS TO NOT VOID ROOF WARRANTY.

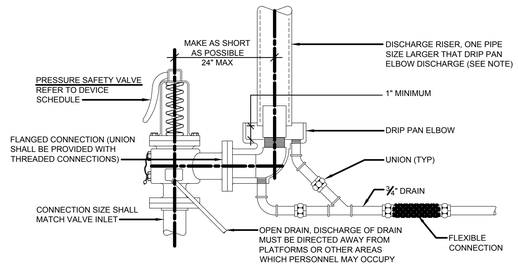


## DETAIL NO. 10 - PRESSURE SAFETY VALVE
SCALE: NONE

NOTES:
1. UNLESS OTHERWISE SHOWN ON THE DRAWINGS, SIZE THE VENT PIPE SO THAT STEAM IS NOT BLOWN OUT AT THE VENT PIPE ENTRANCE. UTILIZE THE CALCULATION METHOD CONTAINED IN ANSI B31.1. POWER PIPING CODE, APPENDIX II.

## 2 PRESSURE SAFETY VALVE DETAIL
SCALE: NOT TO SCALE

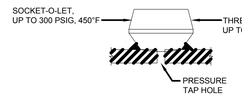


PRESSURE CONNECTION

| PRESSURE TAP HOLE | |
|---|---|
| PIPE SIZE | MAXIMUM DIAMETER |
| UNDER 2" | ¼"Ø |
| 2" TO 3" | ½"Ø |
| 4" TO 8" | ½"Ø |
| 10" & LARGER | ¾"Ø |

## 3 PRESSURE CONNECTION DETAIL
SCALE: NOT TO SCALE

CHAMPLIN ARCHITECTURE
720 E Pete Rose Way, Suite 140
Cincinnati, OH 45202
T 513.241.4474 F 513.241.0081
thinkchamplin.com
THINK CREATE REALIZE
AEI Affiliated Engineers
THP
UNIVERSITY OF KENTUCKY

**CAMPUS INFRASTRUCTURE & C.U.P.**

BID PACKAGE 8

University of Kentucky

LEXINGTON, KENTUCKY

**ISSUANCES**

| No. | Description | Date |
|---|---|---|
| 1 | Issued for Bid and Permit | 01/12/18 |

| | |
|---|---|
| Drawn By | CA |
| Checked By | CA |
| Client Number | 514 |
| Project Number | 5601 |

STATE OF KENTUCKY SCOTT A. FOLTZ 31241 LICENSED PROFESSIONAL ENGINEER 04/30/2019

HVAC DETAILS

H402.8

## CHILLERS

| MARK CH | LOCATION | TYPE | CAPACITY (TONS) | MAXIMUM KW/TON | EVAPORATOR | | | | | REMARKS |
|---|---|---|---|---|---|---|---|---|---|---|
| | | | | | GPM | EWT (°F) | LWT (°F) | PASS | MAX. PD (FT) | FOULING FACTOR | |
| CH-6 | CUP LOWER LEVEL | CENTRIFUGAL | 2500 | 0.598 | 4110 | 54.65 | 40 | 2 | 26.6 | 0.00010 | BASED ON YORK, SEE NOTE #2 |

## CHILLERS

| MARK CH | CONDENSER | | | | | | ELECTRICAL | | | | | CONTROL PANEL | |
|---|---|---|---|---|---|---|---|---|---|---|---|---|---|
| | GPM | EWT (°F) | LWT (°F) | PASS | MAX. PD (FT) | FOULING FACTOR | MAX. POWER INPUT (KW) | FLA | LRA | VOLT | PH | NEMA ENCLOSURE TYPE | STARTER TYPE |
| CH-6 | 7707 | 85 | 94.1 | 1 | 7.9 | 0.00025 | 1508 | 227 | 1736 | 4160 | 3 | 1 | VSD W/FILTER |

NOTES:
1. COORDINATE SCCR OF EQUIPMENT AND CONTROLS WITH DIV 26 CONTRACTOR.
2.CHILLER IS OWNER FURNISHED AND INSTALLED BY MECHANICAL CONTRACTOR

## PUMPS

| MARK P | LOCATION | SERVICE | TYPE | SIZE | CAP. (GPM) | HEAD (FT) | MAX. NPSH REQ'D (FT) | FLUID TYPE | MIN. EFF. (%) | SIZE (IN) | | MOTOR | | | | CONTROLLER | BASED ON | REMARKS |
|---|---|---|---|---|---|---|---|---|---|---|---|---|---|---|---|---|---|---|
| | | | | | | | | | | SUCT. | DISCH. | HP | RPM | VOLT | PH | VFD (Y/N) | | |
| PC-6 | CUP LOWER LEVEL | CHILLED WATER | VERTICAL TURBINE | 1-STAGE | 5000 | 45 | 14.1 | WATER | 83.9 | 16 | 18 | 75 | 1200 | 480 | 3 | NO | B&G | (2), (3) |
| PCW-6 | CUP BASEMENT | CONDENSER WATER | VERTICAL TURBINE | 2-STAGE | 7875 | 82.8 | 27.4 | WATER | 86.3 | 18 | 18 | 200 | 1200 | 480 | 3 | NO | B&G | (1), (2) |

NOTES:
1. PROVIDE INLET BASKET STRAINER WITH ANTI-VORTEX SCREEN. DESIGN FOR 15' SUMP (TOP OF SLAB TO FLOOR), 27.4 HPSHR.
2. WYE / DELTA.
3. PROVIDE PUMP IMPELLER BARREL WITH INLET 4' BELOW FLOOR MOUNT, PUMP 250 PSIG RATED, ANTI-VORTEX SCREEN, TOTAL BARREL DEPTH 10'.

## CONTINUOUS BLOWDOWN HEAT EXCHANGER SCHEDULE

| DESIG. | LOCATION | BOILER LOAD (PPH) | PLANT OPERATING PRESSURE (PSIG) | FLASH PRESSURE (PSIG) | BLOWDOWN PERCENT (%) | MIN BLOWDOWN CAPACITY (PPH) | UNIT DIMENSIONS (WxDxH) | TANK DIMENSIONS (Ø x H) | HEAT EXCHANGER - WATER SIDE | | | | | HEAT EXCHANGER MAX DRAIN TEMP (°F) | BASIS OF DESIGN |
|---|---|---|---|---|---|---|---|---|---|---|---|---|---|---|---|
| | | | | | | | | | FLUID | MIN FLOW RATE (GPM) | ENTERING TEMP (°F) | MAX PRESS DROP (PSIG) | SURFACE AREA (SQ. FT) | | |
| CBHX-2 | CENTRAL UTILITY PLANT - BASEMENT | 250,000 | 175 | 5 | 3 | 7,500 | 24"x24"x95" | 24" x 40" | SOFT WATER | 500 | 60 | 2 | 29 | 120 | MADDEN HV090 |

NOTES:
1. BOILER LOAD IS EQUAL TO THE TOTAL LOAD OF EX BOILERS NOS. 2 & 3 ONLY.

## BLOWOFF TANK SCHEDULE

| DESIG. | LOCATION | BOILER LOAD (PPH) | PLANT OPERATING PRESSURE (PSIG) | BLOWDOWN LINE SIZE (Ø, IN) | MIN BLOWDOWN VOLUME (CU. FT.) | MAX UNIT DIMENSIONS (Ø x H) | AFTERCOOLER | | | BASIS OF DESIGN |
|---|---|---|---|---|---|---|---|---|---|---|
| | | | | | | | FLUID | ENTERING TEMP (°F) | MAX LEAVING TEMP (°F) | |
| BT-2 | CENTRAL UTILITY PLANT - BASEMENT | 250,000 | 175 | 2 | 97.5 | 72" x 10' | CITY WATER | 60 | 120 | MADDEN BD7200 |

NOTES:
1. BOILER LOAD IS EQUAL TO THE TOTAL LOAD OF EX BOILERS NOS. 2 & 3 ONLY.
2. MIN BLOWDOWN CAPACITY BASED ON THE VOLUME OF WATER ASSOCIATED WITH LOWERING EX BOILERS NOS. 2 & 3 STEAM DRUM WATER LEVEL BY 0'-4".
3. SIZE AFTERCOOLER TO ACHIEVE MAX LEAVING TEMPERATURE.

CHAMPLIN ARCHITECTURE
720 E Pete Rose Way, Suite 140
Cincinnati, OH 45202
T 513.241.4474 F 513.241.0081
thinkchamplin.com
THINK CREATE REALIZE

Affiliated Engineers

THP

UNIVERSITY OF KENTUCKY

**CAMPUS INFRASTRUCTURE & C.U.P.**

BID PACKAGE 8

University of Kentucky

LEXINGTON, KENTUCKY

**ISSUANCES**

| No. | Description | Date |
|---|---|---|
| 1 | Issued for Bid and Permit | 01/12/18 |

Drawn By: CS
Checked By: CA
Client Number: 514
Project Number: 5601

STATE OF KENTUCKY — SCOTT A. SIZEMORE — 31961 — LICENSED PROFESSIONAL ENGINEER — 04/30/2019

HVAC SCHEDULES

H500.8

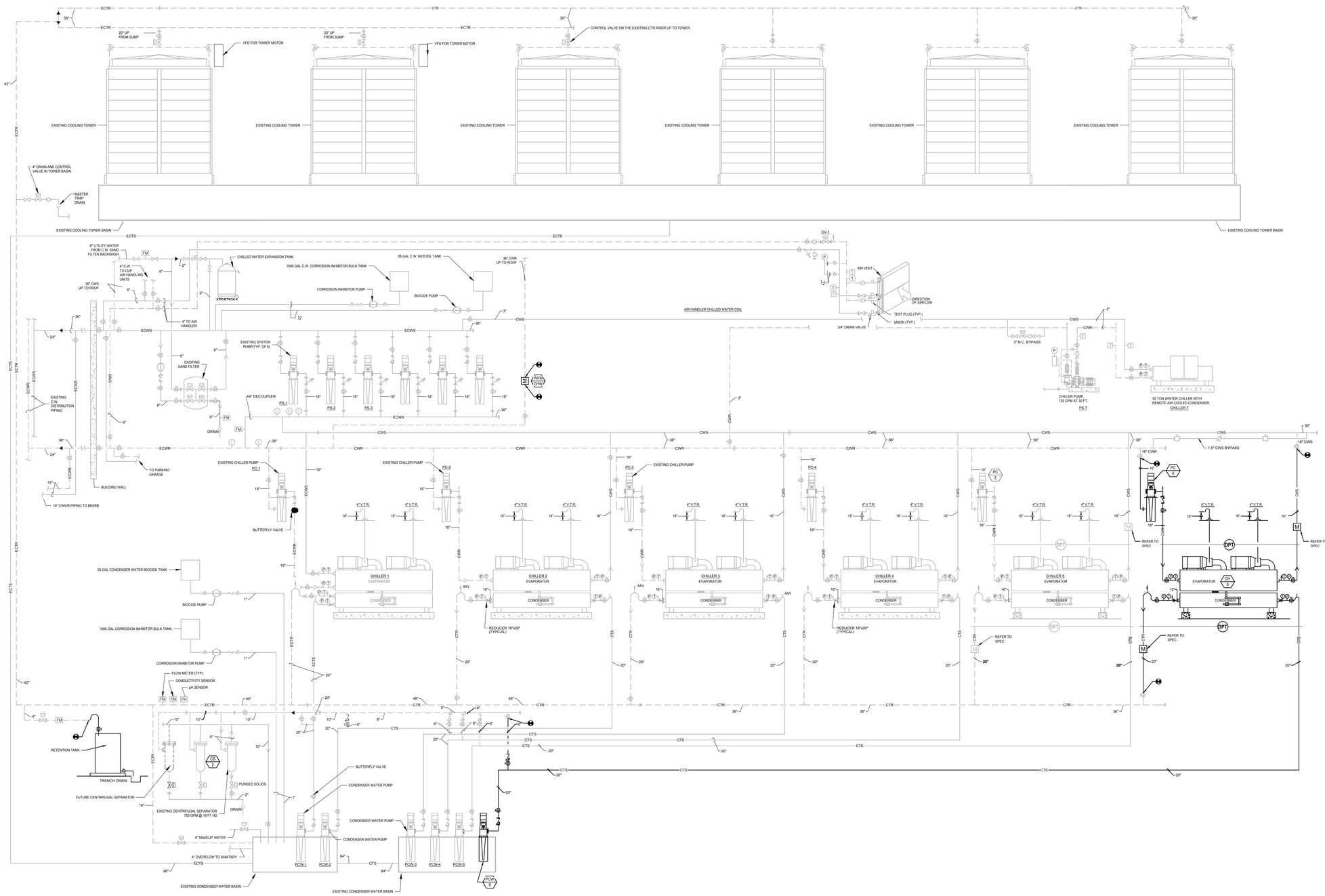


1 **HVAC CHILLED WATER DIAGRAM**
SCALE: NOT TO SCALE

CHAMPLIN
ARCHITECTURE
720 E Pete Rose Way, Suite 140
Cincinnati, OH 45202
T 513.241.4474 F 513.241.0081
thinkchamplin.com
THINK CREATE REALIZE

AEI Affiliated Engineers

THP

UNIVERSITY OF KENTUCKY

**CAMPUS INFRASTRUCTURE & C.U.P.**

BID PACKAGE 8

University of Kentucky

LEXINGTON, KENTUCKY

**ISSUANCES**

| No. | Description | Date |
|---|---|---|
| 1 | Issued for Bid and Permit | 01/12/18 |

| | |
|---|---|
| Drawn By | CS |
| Checked By | CA |
| Client Number | 514 |
| Project Number | 5601 |

STATE OF KENTUCKY SCOTT 31521 LICENSED PROFESSIONAL ENGINEER 06/30/2019

HVAC CHILLED WATER DIAGRAM

H700.8

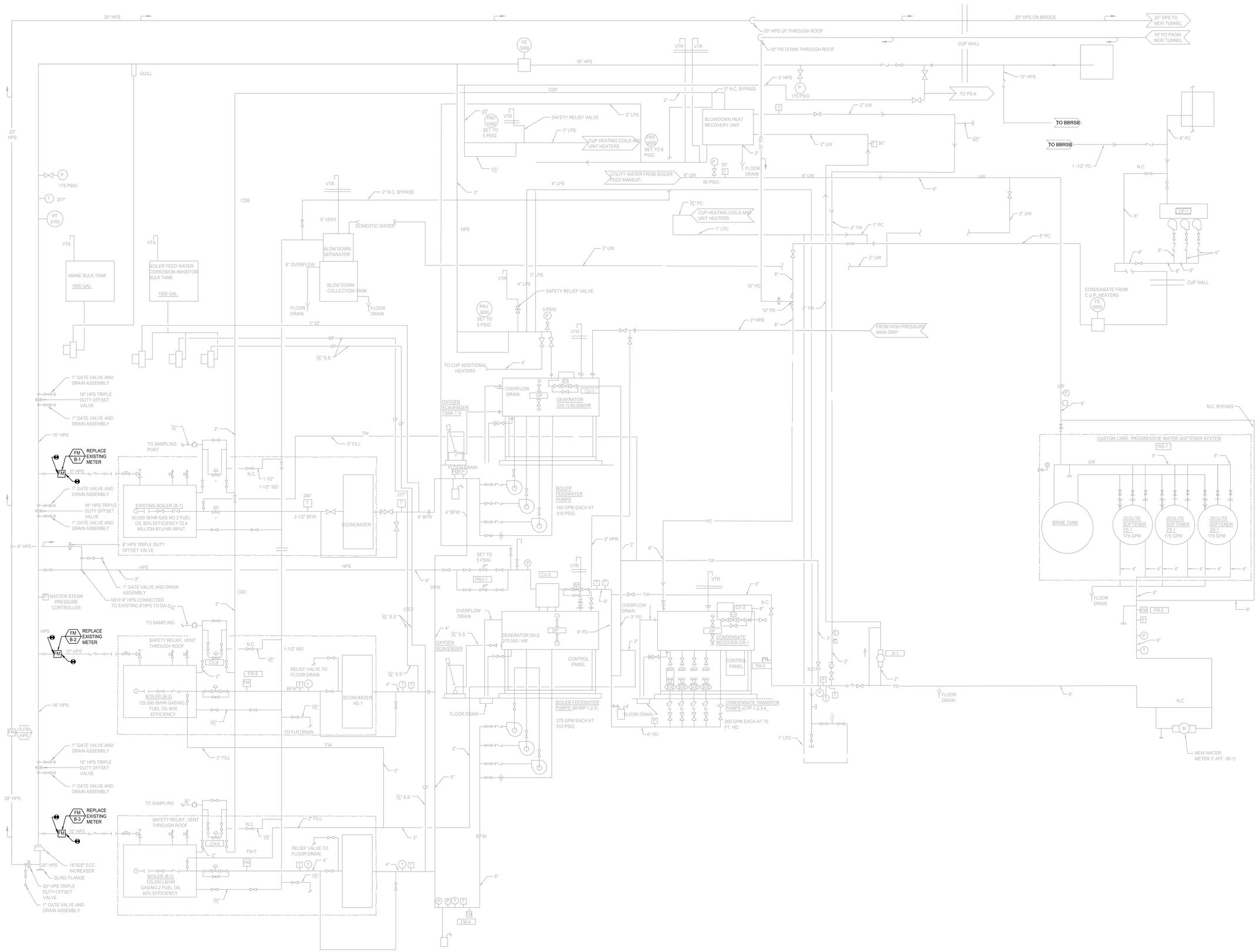


CHAMPLIN
ARCHITECTURE


720 E Pete Rose Way, Suite 140
Cincinnati, OH 45202
T 513.241.4474 F 513.241.0081
thinkchamplin.com


THINK CREATE REALIZE

AEI Affiliated Engineers

THP

UNIVERSITY OF KENTUCKY

**CAMPUS INFRASTRUCTURE & C.U.P.**

BID PACKAGE 8

University of Kentucky

LEXINGTON, KENTUCKY

**ISSUANCES**

| No. | Description | Date |
|---|---|---|
| 1 | Issued for Bid and Permit | 01/12/18 |

| | |
|---|---|
| Drawn By | CS |
| Checked By | CA |
| Client Number | 514 |
| Project Number | 5601 |

STATE OF KENTUCKY
SCOTT
LICENSED
PROFESSIONAL ENGINEER
06/30/2019

HVAC STEAM DIAGRAM

H701.8

KEYNOTES:

1. PROVIDE WELDOLET AND HOT TAP.
2. BALANCE TO CONTINUOUS BLOWDOWN HEAT EXCHANGER - WATER SIDE MINIMUM FLOW RATE LISTED IN MECHANICAL SCHEDULE ON SHEET H501.8.
3. PROVIDE PIPE AND FITTING TYPE TO MATCH EXISTING AT POINT OF CONNECTION UPSTREAM OF DIELECTRIC UNION.
4. PROVIDE ISOLATION VALVE WITH VALVE BODY DRAIN.

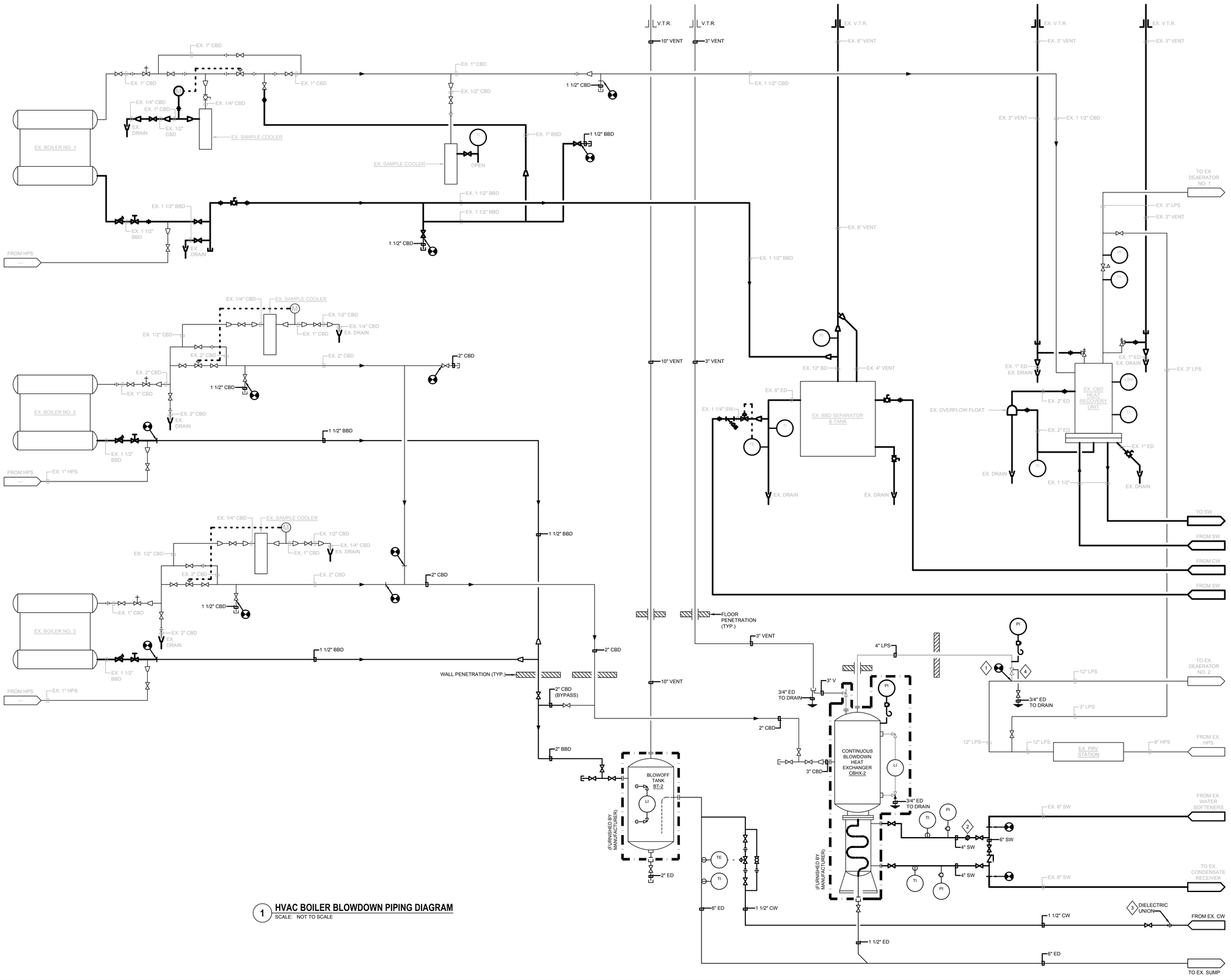


1 HVAC BOILER BLOWDOWN PIPING DIAGRAM
SCALE: NOT TO SCALE


CHAMPLIN ARCHITECTURE
720 E Pete Rose Way, Suite 140
Cincinnati, OH 45202
T 513.241.4474 F 513.241.0081
thinkchamplin.com
THINK CREATE REALIZE
AEI Affiliated Engineers
THP
UNIVERSITY OF KENTUCKY


**CAMPUS INFRASTRUCTURE & C.U.P.**

BID PACKAGE 8

University of Kentucky

LEXINGTON, KENTUCKY

**ISSUANCES**

| No. | Description | Date |
|---|---|---|
| 1 | Issued for Bid and Permit | 01/12/18 |

Drawn By CA

Checked By CA

Client Number 514

Project Number 5601

STATE OF KENTUCKY SCOTT 31521 LICENSED PROFESSIONAL ENGINEER 06/30/2019

HVAC BOILER BLOWDOWN PIPING DIAGRAM

H702.8

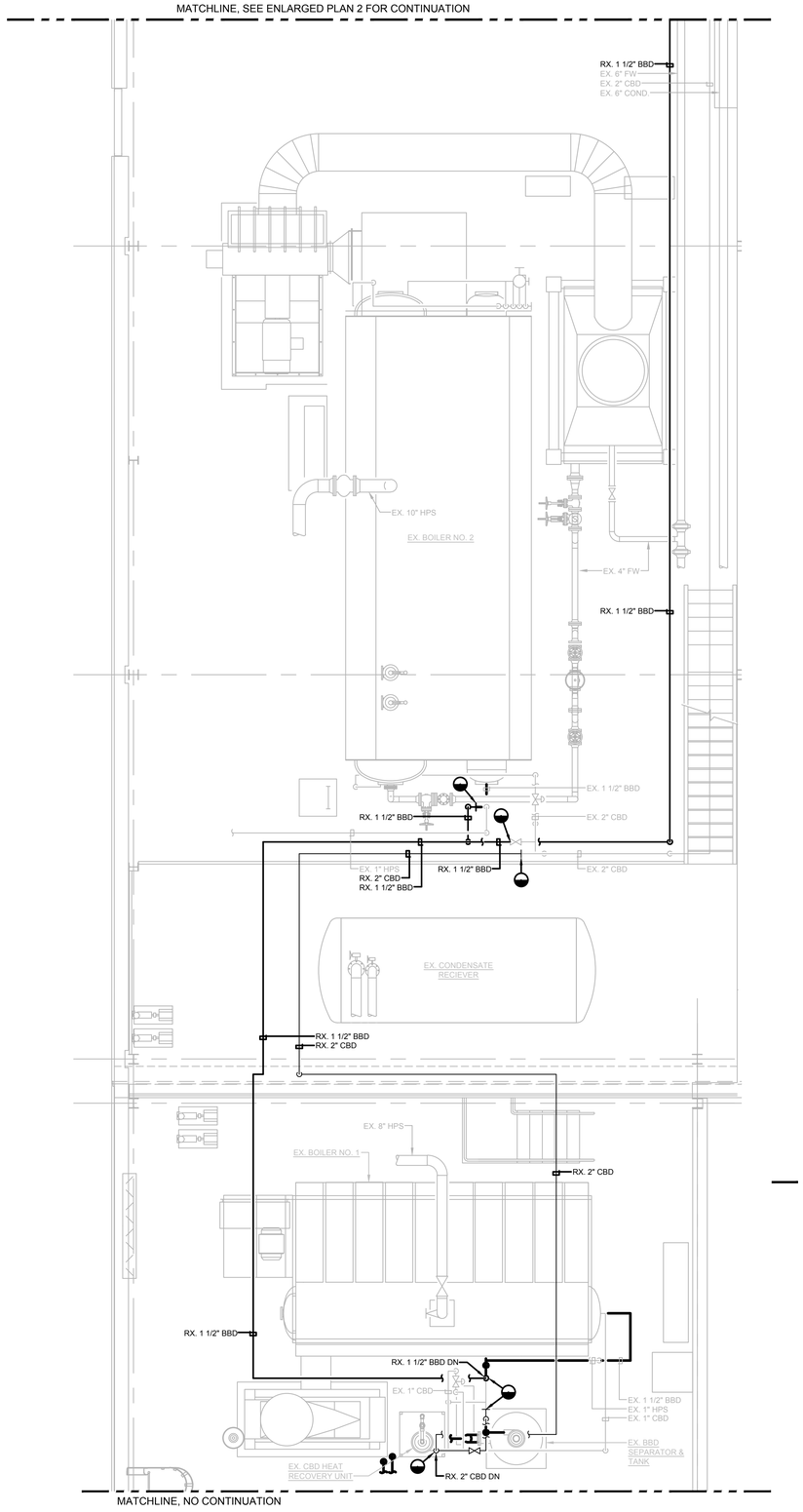


1 ENLARGED HVAC SOUTH BOILER LEVEL DEMOLITION PLAN
SCALE: 1/4" = 1'-0"

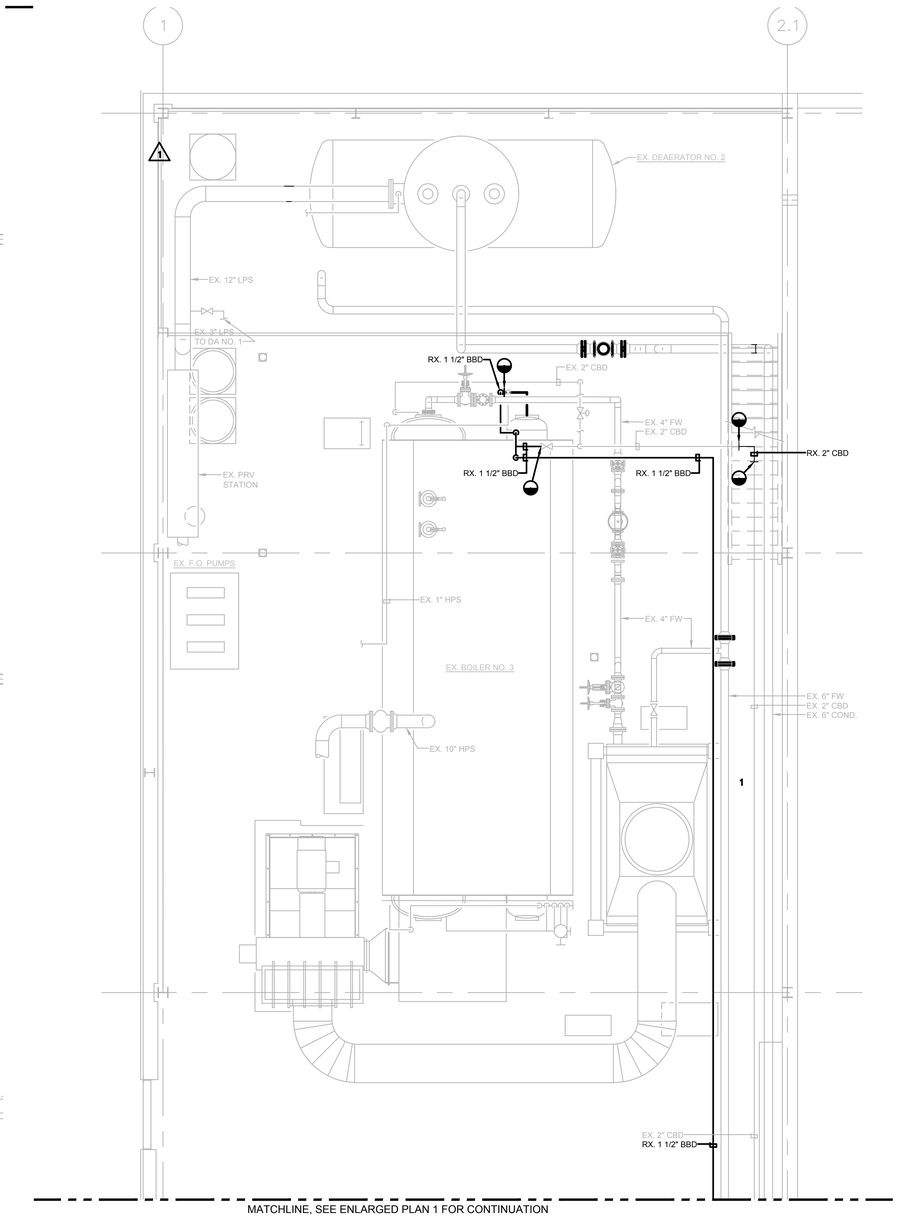


2 ENLARGED HVAC NORTH BOILER LEVEL DEMOLITION PLAN
SCALE: 1/4" = 1'-0"

CHAMPLIN
ARCHITECTURE
720 E Pete Rose Way, Suite 140
Cincinnati, OH 45202
T 513.241.4474 F 513.241.0081
thinkchamplin.com
THINK CREATE REALIZE
Affiliated Engineers
THP
UNIVERSITY OF KENTUCKY

**CAMPUS INFRASTRUCTURE & C.U.P.**

BID PACKAGE 8

University of Kentucky

LEXINGTON, KENTUCKY

**ISSUANCES**

| No. | Description | Date |
|---|---|---|
| 1 | Issued for Bid and Permit | 01/12/18 |

| | |
|---|---|
| Drawn By CA | STATE OF KENTUCKY SCOTT A. HOFFMAN 31971 LICENSED PROFESSIONAL ENGINEER 01/30/2019 |
| Checked By CA | |
| Client Number 514 | |
| Project Number 5601 | |

ENLARGED HVAC BOILER LEVEL DEMOLITION PLANS

HD301.8

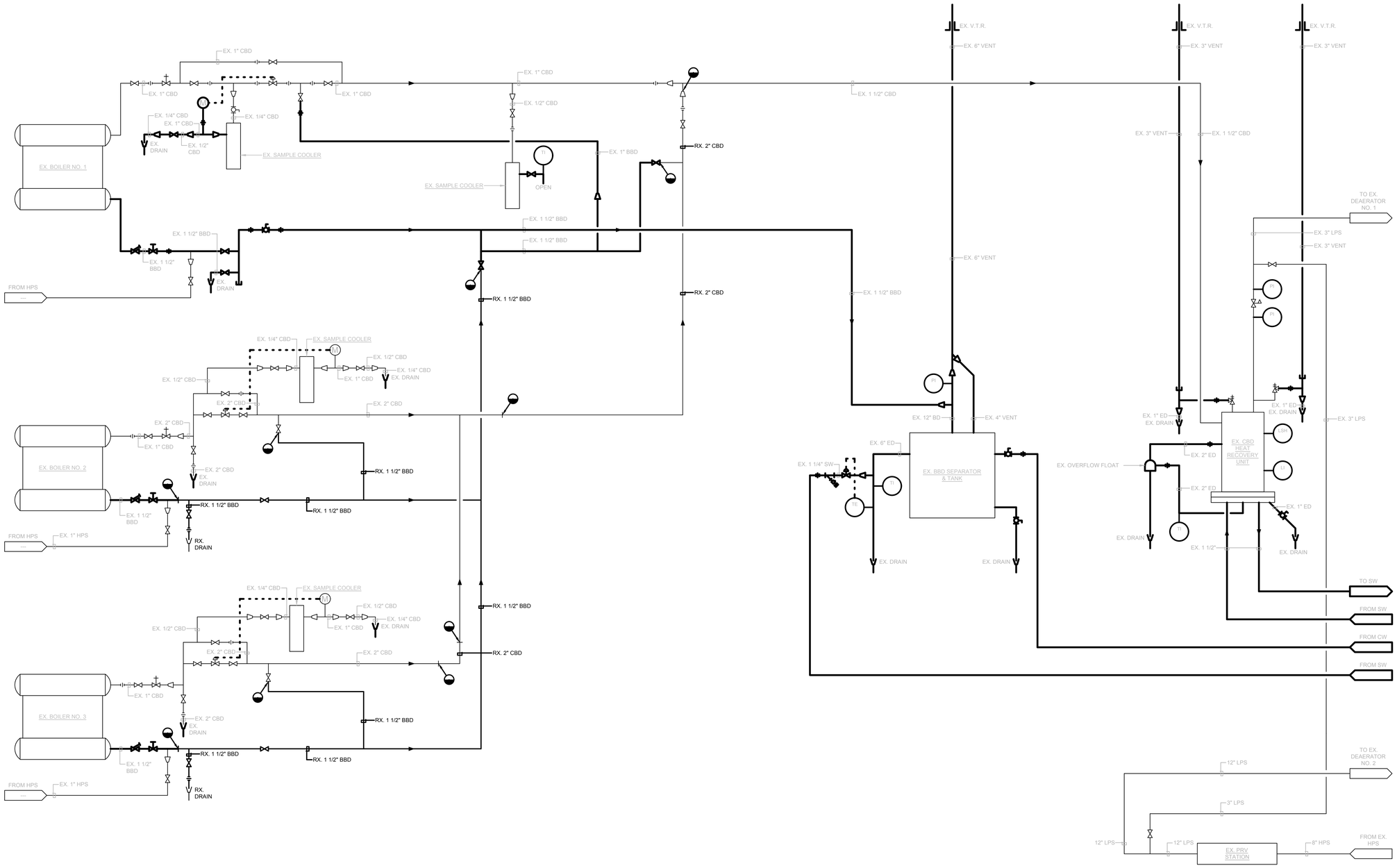


1 **CUP EXISTING BOILER BLOWDOWN DIAGRAM - DEMOLITION**
SCALE: NOT TO SCALE

CHAMPLIN
ARCHITECTURE
720 E Pete Rose Way, Suite 140
Cincinnati, OH 45202
T 513.241.4474 F 513.241.0081
thinkchamplin.com
THINK CREATE REALIZE

AEI Affiliated Engineers

THP

UNIVERSITY OF KENTUCKY

**CAMPUS INFRASTRUCTURE & C.U.P.**

BID PACKAGE 8

University of Kentucky

LEXINGTON, KENTUCKY

**ISSUANCES**

| No. | Description | Date |
|---|---|---|
| 1 | Issued for Bid and Permit | 01/12/18 |

Drawn By CA

Checked By CA

Client Number 514

Project Number 5601

STATE OF KENTUCKY SCOTT STEVENS 31321 LICENSED PROFESSIONAL ENGINEER 06/30/2019

CUP EXISTING BLOWDOWN DIAGRAM - DEMOLITION

HD702.8

## PROCESS AND INSTRUMENTATION DIAGRAM SYMBOLS

BUTTERFLY VALVE MANUAL
BUTTERFLY CONTROL VALVE
BUTTERFLY DAMPER
GLOBE VALVE
BALL VALVE
SHUTOFF VALVE (BUTTERFLY VALVE FOR 2 1/2" AND LARGER, BALL VALVE FOR 2" AND SMALLER)
GAUGE VALVE
PLUG VALVE
BALANCING VALVE
SPRING CHECK VALVE
SWING CHECK VALVE
2-WAY CONTROL VALVE
3-WAY MIXING VALVE
2-WAY SOLENOID VALVE
3-WAY SOLENOID VALVE ARROW INDICATING FAIL POSITION
TRIPLE DUTY VALVE
DRAIN VALVE
DRAIN VALVE WITH CAP
LOCKSHIELD VALVE
FLOAT OPERATED VALVE
QUICK OPENING VALVE
GAS SHUTOFF VALVE
DIAPHRAGM VALVE
THERMAL EXPANSION VALVE
REDUCED PRESSURE BACKFLOW PREVENTER (RPBP)
PRESSURE RELIEF (RV) OR SAFETY VALVE (PSV)
ANGLE VALVE
STOP AND CHECK VALVE
RUPTURE DISK PRESSURE RELIEF
RUPTURE DISK VACUUM RELIEF
FUSIBLE LINK VALVE
PRESSURE REDUCING VALVE (PRV)
NEEDLE VALVE
ROTARY VALVE
SAMPLE VALVE
PRESSURE INDEPENDANT CONTROL VALVE

GENERAL PIPELINE STRAINER WITHOUT DRAIN
GENERAL PIPELINE STRAINER WITH DRAIN
STEAM & CONDENSATE PIPELINE STRAINER
WATER SYSTEM PIPELINE STRAINER
SUCTION DIFFUSER
DUPLEX STRAINER
BASKET STRAINER
FLANGE
UNION
INVERTED BUCKET TRAP
FLOAT AND THERMOSTATIC TRAP
THERMOSTATIC TRAP
EXPANSION JOINT
FLEXIBLE CONNECTION
SHOCK SUPPRESSER
HEAT TRACE TERMINATION POINT
HEAT TRACE POWER CONNECTION POINT
FILTER/REGULATOR
FILTER
2" AND SMALLER, CAP OR PLUG 2 1/2" AND UP, BLIND FLANGE
THERMOMETER
PRESSURE GAUGE (WITH GAUGE VALVE)
FLOW SENSOR
FLOW SWITCH
AUTOMATIC AIR VENT
MANUAL AIR VENT
TEST PLUG (PRESSURE/TEMP.)
CONCENTRIC REDUCER
ECCENTRIC REDUCER
DIRECTION OF PITCH (DOWN)
DIRECTION OF FLOW
OR FLOW DIRECTION

CARTRIDGE FILTER
ELECTRIC HEATED CARTRIDGE FILTER
RESTRICTION ORIFICE
SANITARY TRICLAMP CONNECTION
FLEXIBLE HOSE
SPRAY BALL
DRAIN
DIAPHRAGM SEAL
THERMOWELL
PIG TAIL SIPHON
VORTEX BREAKER
DIRECTION OF FLOW
M MAGNETIC FLOW METER
VENTURI TUBE FLOW METER
FLOW NOZZLE
ROTOMETER
ANNUBAR FLOW METER
CORIOLIS FLOW METER
VORTEX FLOW METER
TURBINE
POSITIVE DISPLACEMENT
SONIC
SQUARE ROOT
TARGET
THERMAL DISPERSION
FLUME
WEIR

(XX) DEFINES FAIL POSITION OR NORMAL POSITION.
FC = FAIL CLOSED
FO = FAIL OPEN
FLP = FAIL LAST POSITION
NC = NORMALLY CLOSED
NO = NORMALLY OPEN

PLATE & FRAME HEAT EXCHANGER
SHELL & TUBE HEAT EXCHANGER
QUICK CONNECT
FAN
AGITATOR
SEPARATOR
FLEXIBLE HOSE
PUMP-VERTICAL
PUMP-HORIZONTAL
TANK - DRYER
WATER SOFTENER
CYLINDER
EXPANSION TANK
AIR SEPARATOR
INLINE PUMP

### DAMPERS

OPPOSED BLADE TYPE
PARALLEL BLADE TYPE
AIR FLOW MEASURING DAMPER

## ACTUATORS

MANUAL
ON/OFF GENERAL
ON/OFF SPRING OPPOSED
ON/OFF DOUBLE ACTING
MODULATING W/O POSITIONER
MODULATING WITH POSITIONER
S SOLENOID
M ELECTRIC MOTOR DRIVEN

## INSTRUMENT LINE SYMBOLS

CONNECTION TO PROCESS OR INSTRUMENT SUPPLY
PNEUMATIC SIGNAL
CAPILLARY TUBE
HYDRAULIC SIGNAL
ELECTRIC SIGNAL OR SOFTWARE LINK (SERIAL OR DATA)
ELECTROMAGNETIC OR SONIC SIGNAL INCLUDE RADIO WAVES, LIGHT, NUCLEAR RADIATION, HEAT
HARDWARE LINK
PACKAGED EQUIPMENT LINE
MAIN AIR SUPPLY
XXXXX XXXXX INDICATES COMMUNICATION FORMAT

## PIPING SYSTEM LABELS

| | |
|---|---|
| BBD | BOTTOM BLOWDOWN |
| BF | BOILER FEEDWATER |
| BSWR | BASIN SWEEPER WATER RETURN |
| BSWS | BASIN SWEEPER WATER SUPPLY |
| CCC | COOLING COIL CONDENSATE |
| CHWR | CHILLED WATER RETURN |
| CHWS | CHILLED WATER SUPPLY |
| CLPC | CLEAN LOW PRESSURE CONDENSATE |
| CLPS | CLEAN LOW PRESSURE STEAM |
| CWR | CONDENSER WATER RETURN |
| CWS | CONDENSER WATER SUPPLY |
| FOR | FUEL OIL RETURN |
| FOS | FUEL OIL SUPPLY |
| GWR | GLYCOL WATER RETURN |
| GWS | GLYCOL WATER SUPPLY |
| HGWR | HOT GLYCOL WATER RETURN |
| HGWS | HOT GLYCOL WATER SUPPLY |
| HPC | HIGH PRESSURE CONDENSATE |
| HPS(XX) | HIGH PRESSURE STEAM (PSIG) |
| HRO | HUMIDIFICATION RO WATER |
| HWR | HOT WATER RETURN |
| HWS | HOT WATER SUPPLY |
| LPC | LOW PRESSURE CONDENSATE |
| LPS | LOW PRESSURE STEAM |
| MTCHWR | MEDIUM TEMP CHILLED WATER RETURN |
| MTCHWS | MEDIUM TEMP CHILLED WATER SUPPLY |
| NPCW | NONPOTABLE COLD WATER |
| PHWR | PERIMETER HOT WATER RETURN |
| PHWS | PERIMETER HOT WATER SUPPLY |
| RW | REUSE WATER |
| RWR | RECLAIM WATER RETURN |
| RWS | RECLAIM WATER SUPPLY |
| SBD | SURFACE BLOWDOWN |
| TRW | TRANSFER WATER |

POSITIVE DISPLACEMENT PUMP
AIR MIXING DEVICE
SOUND ATTENUATING DEVICE
ACTIVE CHILLED BEAM

## GENERAL SHEET SYMBOLS

NOTE X. PLAN NOTE REFERENCE SYMBOL
REVISION SYMBOL REFERENCE NUMBER
CHANGE BULLETIN SYMBOL REFERENCE NUMBER
ELEVATION SYMBOL ELEVATION DESIGNATION
CONNECTION SYMBOL NEW TO EXISTING
BILL OF MATERIAL SYMBOL "X" = ITEM NUMBER
PLAN CONTINUATION SYMBOL: BOTTOM = SHEET REFERENCE FOR CONTINUATION
DETAIL REFERENCE SYMBOL: TOP = DETAIL NUMBER BOTTOM = SHEET REFERENCE ON WHICH DETAIL APPEARS
SECTION SYMBOL: TOP = SECTION NUMBER BOTTOM = SHEET REFERENCE ON WHICH SECTION APPEARS
EQUIPMENT TAG

## GENERAL INSTRUMENT OR FUNCTION SYMBOLS

FIELD MOUNTED | PANEL MOUNT ACCESSIBLE

DISCRETE INSTRUMENTS (ie: SENSORS, CONTROLLERS, RECORDERS ETC.)
INDICATING LIGHTS, ALARMS, HORNS
XXXX YYYY — XXXX = PROCESS MEDIA REFER TO DRAWING YYYY FOR CONTINUATION OF PROCESS
XXX 999 — LOOP IDENTIFIER (REFER TO ABBREVIATION MATRIX); LOOP TAG NUMBER
XXX = CLARIFIER (USED FOR ANALYZERS TO IDENTIFY TYPE EXAMPLE: i.e. pH, CONDUIT, ODP, ETC...)
I INTERLOCK

| | | | |
|---|---|---|---|
| AI XXX | DDC ANALOG INPUT | AI XXX | PLC ANALOG INPUT |
| AO XXX | DDC ANALOG OUTPUT | AO XXX | PLC ANALOG OUTPUT |
| DI XXX | DDC DISCRETE INPUT | DI XXX | PLC DISCRETE INPUT |
| DO XXX | DDC DISCRETE OUTPUT | DO XXX | PLC DISCRETE OUTPUT |
| FI XXX | DDC FREQUENCY INPUT | FI XXX | PLC FREQUENCY INPUT |

## AIR TERMINAL UNIT SYMBOLS

BUTTERFLY VALVE W/ REHEAT
VENTURI VALVE W/REHEAT
BUTTERFLY VALVE
VENTURI VALVE
CONSTANT VOLUME VENTURI VALVE

## INSTRUMENTATION SYMBOLS

| FIRST LETTERS | INITIATING OR MEASURED VARIABLE | CONTROLLERS RECORDING | CONTROLLERS INDICATING | CONTROLLERS BLIND | SELF-ACTUATED CONTROL VALVES | SELF-ACTUATED CONTROL DAMPERS | READOUT DEVICES RECORDING | READOUT DEVICES INDICATING | SWITCHES and ALARM DEVICES HIGH | LOW | COMB. | TRANSMITTERS RECORDING | TRANSMITTERS INDICATING | TRANSMITTERS BLIND | SOLENOIDS, RELAYS, & COMPUTING DEVICES | PRIMARY ELEMENT | TEST POINT | WELL or PROBE | VIEWING DEVICE GLASS | SAFETY DEVICE | FINAL CONTROL ELEMENT |
|---|---|---|---|---|---|---|---|---|---|---|---|---|---|---|---|---|---|---|---|---|---|
| A | ANALYSIS | ARC | AIC | AC | ACV | ACD | AR | AI | ASH | ASL | ASHL | ART | AIT | AT | AY | AE | AP | AW | AG | | AV |
| B | BURNER/COMBUSTION | BRC | BIC | BC | BCV | BCD | BR | BI | BSH | BSL | BSHL | BRT | BIT | BT | BY | BE | BP | BW | BG | | BZ |
| C | CONDUCTIVITY | CRC | CIC | CC | CCV | CCD | CR | CI | CSH | CSL | CSHL | CRT | CIT | CT | CY | CE | CP | CW | CG | | CV |
| CR | CONTROL RELAY | | | | | | | | | | | | | | CR | | | | | | |
| D | DENSITY/VISCOSITY | DRC | DIC | DC | DCV | DCD | DR | DI | DSH | DSL | DSHL | DRT | DIT | DT | DY | DE | DP | DW | DG | | DV |
| E | VOLTAGE | ERC | EIC | EC | ECV | ECD | ER | EI | ESH | ESL | ESHL | ERT | EIT | ET | EY | EE | EP | EW | EG | | EZ |
| F | FLOW RATE | FRC | FIC | FC | FCV | FCD | FR | FI | FSH | FSL | FSHL | FRT | FIT | FT | FY | FE | FP | FW | FG | | FV |
| FQ | FLOW QUANTITY | FQRC | FQIC | FQC | FQCV | FQCD | FQR | FQI | FQSH | FQSL | FQSHL | FQRT | FQIT | FQT | FQY | FQE | FQP | FQW | FQG | | FQV |
| FF | FLOW RATIO | FFRC | FFIC | FFC | FFCV | FFCD | FFR | FFI | FFSH | FFSL | FFSHL | FFRT | FFIT | FFT | FFY | FFE | FFP | FFW | FFG | | |
| H | HAND | HRC | HIC | HC | HCV | HCD | HR | HI | HSH | HSL | HSHL | HRT | HIT | HT | HY | HE | HP | HW | HG | | HZ |
| I | CURRENT | IRC | IIC | IC | ICV | ICD | IR | II | ISH | ISL | ISHL | IRT | IIT | IT | IY | IE | IP | IW | IG | | IZ |
| J | POWER | JRC | JIC | JC | JCV | JCD | JR | JI | JSH | JSL | JSHL | JRT | JIT | JT | JY | JE | JP | JW | JG | | JV |
| K | TIME | KRC | KIC | KC | KCV | KCD | KR | KI | KSH | KSL | KSHL | KRT | KIT | KT | KY | KE | KP | KW | KG | | KV |
| L | LEVEL | LRC | LIC | LC | LCV | LCD | LR | LI | LSH | LSL | LSHL | LRT | LIT | LT | LY | LE | LP | LW | LG | | LV |
| M | MOISTURE | MRC | MIC | MC | MCV | MCD | MR | MI | MSH | MSL | MSHL | MRT | MIT | MT | MY | ME | MP | MW | MG | | MV |
| N | FREQUENCY | NRC | NIC | NC | NCV | NCD | NR | NI | NSH | NSL | NSHL | NRT | NIT | NT | NY | NE | NP | NW | NG | | |
| P | PRESS./VACUUM | PRC | PIC | PC | PCV | PCD | PR | PI | PSH | PSL | PSHL | PRT | PIT | PT | PY | PE | PP | PW | PG | PSV/PSE | PV |
| PD | PRESS./DIFF. | PDRC | PDIC | PDC | PDCV | PDCD | PDR | PDI | PDSH | PDSL | PDSHL | PDRT | PDIT | PDT | PDY | PDE | PDP | PDW | PDG | | PDV |
| Q | QUANTITY | QRC | QIC | QC | QCV | QCD | QR | QI | QSH | QSL | QSHL | QRT | QIT | QT | QY | QE | QP | QW | QG | | QZ |
| R | RADIATION | RRC | RIC | RC | RCV | RCD | RR | RI | RSH | RSL | RSHL | RRT | RIT | RT | RY | RE | RP | RW | RG | | RZ |
| S | SPEED | SRC | SIC | SC | SCV | SCD | SR | SI | SSH | SSL | SSHL | SRT | SIT | ST | SY | SE | SP | SW | SG | | SV |
| T | TEMPERATURE | TRC | TIC | TC | TCV | TCD | TR | TI | TSH | TSL | TSHL | TRT | TIT | TT | TY | TE | TP | TW | TG | TSE | TV |
| TD | TEMPERATURE/DIFF. | TDRC | TDIC | TDC | TDCV | TDCD | TDR | TDI | TDSH | TDSL | TDSHL | TDRT | TDIT | TDT | TDY | TDE | TDP | TDW | TDG | | TDV |
| U | MULTIVARIABLE | URC | UIC | UC | UCV | UCD | UR | UI | USH | USL | USHL | URT | UIT | UT | UY | UE | UP | UW | UG | | UV |
| V | VIBRATION/MACHINERY ANALYSIS | VRC | VIC | VC | VCV | VCD | VR | VI | VSH | VSL | VSHL | VRT | VIT | VT | VY | VE | VP | VW | VG | | VZ |
| W | WEIGHT/FORCE | WRC | WIC | WC | WCV | WCD | WR | WI | WSH | WSL | WSHL | WRT | WIT | WT | WY | WE | WP | WW | WG | | WZ |
| X | ON/OFF | XRC | XIC | XC | XCV | XCD | XR | XI | XSH | XSL | XSHL | XRT | XIT | XT | XY | XE | XP | XW | XG | | XV |
| Y | EVENT STATE/PRESENCE | YRC | YIC | YC | YCV | YCD | YR | YI | YSH | YSL | YSHL | YRT | YIT | YT | YY | YE | YP | YW | YG | | YZ |
| Z | POS./DIMEN. | ZRC | ZIC | ZC | ZCV | ZCD | ZR | ZI | ZSH | ZSL | ZSHL | ZRT | ZIT | ZT | ZY | ZE | ZP | ZW | ZG | | ZV |

NOTE: THIS TABLE IS NOT ALL INCLUSIVE

*A, ALARM. THE ANNUNCIATING DEVICE, MAY BE USED IN THE SAME FASHION AS S, SWITCH, THE ACTUATING DEVICE.

† THE LETTERS H AND L MAY BE OMITTED IN THE UNDEFINED CASE

OTHER POSSIBLE COMBINATIONS

| | |
|---|---|
| TJR | (SCANNING RECORDER) |
| LLH | (PILOT LIGHT) |
| XC | (MOTOR STARTER) |
| PRV | (PRESSURE REGULATING VALVE) |
| FO | (RESTRICTION ORIFICE) |
| FRK,HIK | (CONTROL STATIONS) |
| FX | (ACCESSORIES) |
| PFR | (RATIO) |
| KQI | (RUNNING TIME INDICATOR) |
| WKIC | (RATE-OF-WEIGHT LOSS CONTROLLER) |
| ZSC | (POSITION SWITCH CLOSED) |
| ZSO | (POSITION SWITCH OPEN) |
| HMS | (HAND MOMENTARY SWITCH) |
| XY | (PILOT SOLENOID VALVE) |
| XS | (MOTOR AUXILIARY) |

## HVAC EQUIPMENT ABBREVIATIONS

AC - AIR CONDITIONING UNIT/ AIR COMPRESSOR
ACC - AIR COOLED CONDENSER
ACCU - AIR COOLED CONDENSING UNIT
AF - AFTER FILTER
AHU - AIR HANDLING UNIT
AMD - AIR MIXING DEVICE
AS - AIR SEPARATOR
AT - AIR TERMINAL DEVICE

B - BOILER
BAS - BUILDING AUTOMATION SYSTEM
BBD - BOTTOM BLOWDOWN
BBS - BOILER BLOWDOWN SEPARATOR
BF - BOILER FEEDWATER
BFS - BOILER FEEDWATER SYSTEM
BH - BOOSTER HUMIDIFIER
BMS - BUILDING MANAGEMENT SYSTEM
BSWR - BASIN SWEEPER WATER RETURN
BSWS - BASIN SWEEPER WATER SUPPLY

C - CONVECTOR
CA - COMPRESSED AIR/COMBUSTION AIR
CB - CHILLED BEAM
CC - COOLING COIL
CCC - COOLING COIL CONDENSATE
CAV - CONSTANT AIR VALVE
CCW - CLEAR WATER WASTE
CEV - CONSTANT EXHAUST VALVE
CFCI - CONTRACTOR FURNISHED, CONTRACTOR INSTALLED
CH - CHILLER
CHP - CHILLED WATER PUMP
CHWR - CHILLED WATER RETURN
CHWS - CHILLED WATER SUPPLY
CLPC - CLEAN LOW PRESSURE CONDENSATE
CLPS - CLEAN LOW PRESSURE STEAM
CP - CONDENSATE PUMP/ CONTROL PUMP
CPD - CONDENSATE PUMP DISCHARGE
CSW - COLD SOFT WATER
CT - COOLING TOWER
CUH - CABINET UNIT HEATER
CV - CONVERTER
CVV - CONSTANT VOLUME VALVE
CW - CITY WATER/CONDENSER WATER
CWP - CONDENSER WATER PUMP
CWR - CONDENSER WATER RETURN
CWS - CONDENSER WATER SUPPLY
CWW - CLEAR WATER WASTE
CWV - CLEAR WATER VENT

D - DAMPER/DRAIN
DA - DEAERATOR
DCW - DOMESTIC COLD WATER
DH - DEHUMIDIFIER
DHW - DOMESTIC HOT WATER
DP - DISTRIBUTION PANEL
DT - DAY TANK

EA - EXHAUST AIR
EAV - EXHAUST AIR VALVE
EH - EXHAUST HOOD/ ELECTRIC HEATER
EJ - EXPANSION JOINT
ERR - ENERGY RECOVERY RETURN
ERS - ENERGY RECOVERY SUPPLY
ET - EXPANSION TANK
EWC - ELECTRIC WATER COOLER
EX - EXHAUST FAN

F - FILTER
FC - FAIL CLOSE
FCU - FAN COIL UNIT
FCV - FLOW CONTROL VALVE
FD - FIRE DAMPER
FE - FUME EXHAUST
FEV - FUME EXHAUST VALVE

FF - FINAL FILTER
FHC - FIRE HOSE CABINET
FLP - FAIL LAST POSITION
FO - FAIL OPEN
FOF - FUEL OIL FILL
FOR - FUEL OIL RETURN
FOS - FUEL OIL SUPPLY
FOV - FUEL OIL VENT
FR - FIN TUBE RADIATION
FT - FLASH TANK
FW - FEEDWATER

GE - GENERAL EXHAUST
GWP - GLYCOL WATER PUMP
GWR - GLYCOL WATER RETURN
GWS - GLYCOL WATER SUPPLY

H - HUMIDIFIER
HC - HEATING COIL
HOA - HAND OFF AUTO
HGWR - HOT GLYCOL WATER RETURN
HGWS - HOT GLYCOL WATER SUPPLY
HP - HEAT PUMP/HORSEPOWER
HPC - HIGH PRESSURE CONDENSATE
HPG - HIGH PRESSURE NATURAL GAS
HPR - HIGH PRESSURE CONDENSATE RETURN
HPS(XX) - HIGH PRESSURE STEAM (PRESSURE IN PSIG)
HRC - HEAT RECOVERY COIL
HRD - HEAT RECLAIM DEVICE
HRO - HUMIDIFICATION RO WATER
HROH - HUMIDIFICATION RO WATER (HIGH ZONE)
HRU - HEAT RECOVERY UNIT
HRW - HEAT RECOVERY WHEEL
HT - HEAT TRACE
HTR - HEATER
HVU - HEATING VENTILATING UNIT
HWP - HOT WATER PUMP
HWR - HOT WATER RETURN
HWS - HOT WATER SUPPLY
HEX - HEAT EXCHANGER

IA - INSTRUMENT AIR
IC - INTERCOOLER
IH - INTAKE HOOD
IW - INDIRECT WASTE

JWR - JACKET WATER RETURN
JWS - JACKET WATER SUPPLY

LN2 - LIQUID NITROGEN
LP - LOW PRESSURE
LPC - LOW PRESSURE CONDENSATE
LPS - LOW PRESSURE STEAM
LTACS - LOW TEMP AIRFLOW CONTROL SYSTEM
LV - LAB VENT
LW - LAB WASTE

M - MOTOR
MCC - MOTOR CONTROL CENTER
MCV - MOISTURE CONTROL VALVE
MPR - MEDIUM PRESSURE CONDENSATE RETURN
MPS - MEDIUM PRESSURE STEAM
MS - MOTOR STARTER
MTCHWR - MEDIUM TEMP CHILLED WATER RETURN
MTCHWS - MEDIUM TEMP CHILLED WATER SUPPLY

N2 - N2 COMMUNICATIONS BUS
NA - NOT APPLICABLE
NC - NORMALLY CLOSED
NG - NATURAL GAS
NO - NORMALLY OPEN
NPCW - NON-POTABLE COLD WATER
NPHW - NON-POTABLE HOT WATER
NPSW - NON-POTABLE SOFT WATER
NPW - NON-POTABLE WATER

OA - OUTSIDE AIR
OF - OVERFLOW WATER
OFCI - OWNER FURNISHED CONTRACTOR INSTALLED
OFOI - OWNER FURNISHED OWNER INSTALLED

P - PUMP
PA - PLANT AIR
PC - PUMPED CONDENSATE
PF - PRE-FILTER
PHWR - PERIMETER HOT WATER RETURN
PHWS - PERIMETER HOT WATER SUPPLY
PNL - PANEL
PP - PETROLEUM SOLVENT
PS - POWER PANEL
PVDF - POLYVINYLIDENE FLUORIDE
PW - PROCESS WASTE

RAF - RETURN AIR FAN
RAH - ROOFTOP AIR HANDLING UNIT
RC - REHEAT COIL
RCP - RADIANT CEILING PANEL
RD - ROOF DRAIN
RH - RELIEF HOOD
RHWS - REHEAT HOT WATER SUPPLY
RHWR - REHEAT HOT WATER RETURN
RHG - REFRIGERANT HOT GAS
RL - REFRIGERANT LIQUID
RO - REVERSE OSMOSIS WATER
ROH - REVERSE OSMOSIS WATER (HIGH ZONE)
RS - REFRIGERANT SUCTION
RSF - ROOF SUPPLY FAN
RWR - RECLAIM WATER RETURN
RWS - RECLAIM WATER SUPPLY
RW - REUSE WATER

S - SILENCER/STORM
SA - SUPPLY AIR
SAD - SOUND ATTENUATING DEVICE
SAN - SANITARY
SBD - SURFACE BLOWDOWN
SD - SUCTION DIFFUSER
SF - SUPPLY FAN
SPR - SPRINKLER
S/S - START/STOP
SS - STORM SEWER/STAINLESS STEEL
ST - STORAGE TANK/STEAM TRAP
SV - STEAM VENT

T - TANK
TCP - TEMPERATURE CONTROL PANEL
TCV - TEMPERATURE CONTROL VALVE
TRW - TRANSFER WATER
TWR - TOWER WATER RETURN
TWS - TOWER WATER SUPPLY
TXV - THERMAL EXPANSION VALVE

UH - UNIT HEATER
UST - UNDERGROUND STORAGE TANK
UV - UNIT VENTILATOR

V - VALVE/VOLTS/VENT
VA - VENTILATION AIR
VAC - VACUUM
VAV - VARIABLE AIR VALVE
VEV - VARIABLE EXHAUST VALVE
VFD - VARIABLE FREQUENCY DRIVE
VR - VAPOR RECOVERY
VTR - VENT THRU ROOF

WCC - WATER COOLED CONDENSATE
WE - WET EXHAUST
WF - WATER FILTER

X-(XXXX) - EXISTING (SYSTEM)


CHAMPLIN ARCHITECTURE
720 E Pete Rose Way, Suite 140
Cincinnati, OH 45202
T 513.241.4474 F 513.241.0081
thinkchamplin.com
THINK CREATE REALIZE

Affiliated Engineers

THP

UNIVERSITY OF KENTUCKY


**CAMPUS INFRASTRUCTURE & C.U.P.**

BID PACKAGE 8
University of Kentucky

LEXINGTON, KENTUCKY

**ISSUANCES**

| No. | Description | Date |
|---|---|---|
| 1 | Issued for Bid and Permit | 01/12/18 |

Drawn By EJ
Checked By BK
Client Number 514
Project Number 5601

STATE OF KENTUCKY SCOTT FOSTER 31321 LICENSED PROFESSIONAL ENGINEER 06/30/2019

BP-8 - CONTROL INSTRUMENTATION SYMBOLS & ABBREVIATIONS

IC001.8

GENERAL NOTES:

1. THE CONTROL/FLOW DIAGRAM IS ONLY INTENDED TO PROVIDE CONTROL AND INSTRUMENTATION RELATED INFORMATION. REFER TO MECHANICAL DETAILS FOR VALVING, DAMPERING AND ASSOCIATED SPECIALTIES' INSTALLATION REQUIREMENTS.
2. CONTROL/FLOW DIAGRAM INCLUDES GENERAL ARRANGEMENT OF SYSTEM COMPONENTS. REFER TO FLOOR PLANS AND EQUIPMENT SCHEDULES FOR COMPONENT QUANTITIES.

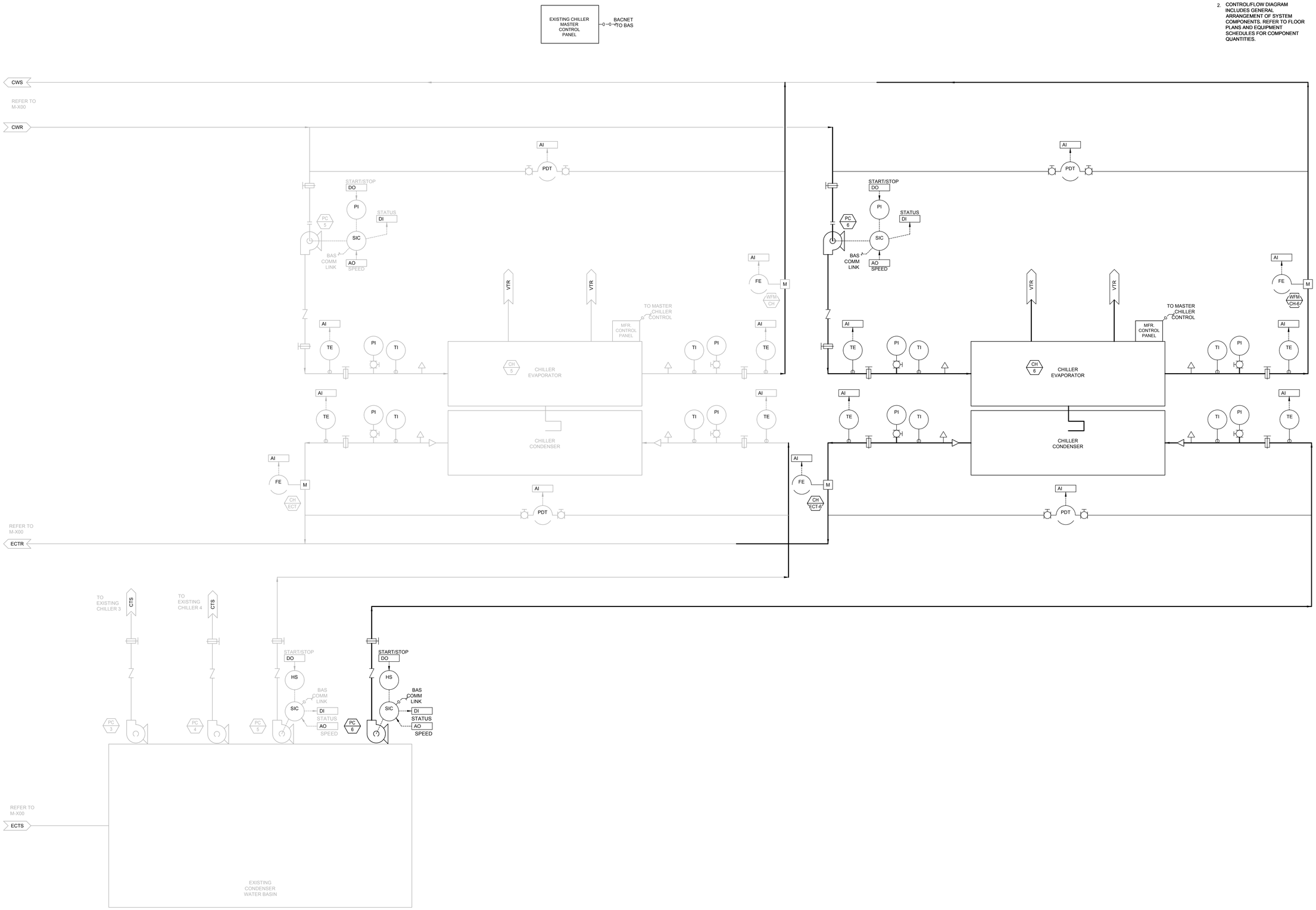



CHAMPLIN ARCHITECTURE

720 E Pete Rose Way, Suite 140
Cincinnati, OH 45202
T 513.241.4474 F 513.241.0081
thinkchamplin.com

THINK CREATE REALIZE

Affiliated Engineers

THP

UNIVERSITY OF KENTUCKY


**CAMPUS INFRASTRUCTURE & C.U.P.**

BID PACKAGE 8

University of Kentucky

LEXINGTON, KENTUCKY

**ISSUANCES**

| No. | Description | Date |
|---|---|---|
| 1 | Issued for Bid and Permit | 01/12/18 |

| | |
|---|---|
| Drawn By: CS | |
| Checked By: CA | |
| Client Number: 514 | |
| Project Number: 5601 | |

STATE OF KENTUCKY — SCOTT A. CARTER — 31... — LICENSED PROFESSIONAL ENGINEER — 01/30/2019

BP-8 - CHILLED WATER CONTROL DIAGRAM

IC700.8

## WATER FLOW METERS

| MARK WFM | LOCATION | SYSTEM | SERVICE | TYPE | CAPACITY (GPM) | LINE SIZE (IN) | MAX. PD (FT) | REMARKS |
|---|---|---|---|---|---|---|---|---|
| CH-6 | CUP LOWER LEVEL | CHW | CHWS | Magnetic | 4200 | 16 | 10 | IC700 |
| ECT-6 | CUP LOWER LEVEL | CHW | ECTR | Magnetic | 7750 | 20 | 30 | IC700 |
| CHW | CUP LOWER LEVEL | CHW | MAIN | ULTRASONIC | 265000 | 36 | | |
| | | | | | | | | |

## STEAM FLOW METERS

| MARK FM | LOCATION | SYSTEM | SERVICE | TYPE | MIN CAPACITY (LBS/HR) | MAX CAPACITY (LBS/HR) | LINE SIZE (IN) | REMARKS |
|---|---|---|---|---|---|---|---|---|
| B1 | CUP LOWER LEVEL | STEAM | BOILER 1 | ORIFICE PLATE | 6,000 | 60,000 | 6 | BASE BID |
| B2 | CUP LOWER LEVEL | STEAM | BOILER 2 | ORIFICE PLATE | 12,000 | 125,000 | 10 | BASE BID |
| B3 | CUP LOWER LEVEL | STEAM | BOILER 3 | ORIFICE PLATE | 12,000 | 125,000 | 10 | BASE BID |
| HPS | CUP LOWER LEVEL | STEAM | MAIN | ORIFICE PLATE | 10,000 | 310,000 | 20 | BASE BID |
| B1A | CUP LOWER LEVEL | STEAM | BOILER 1 | VERABAR | 6,000 | 60,000 | 6 | ALTERNATE |
| B2A | CUP LOWER LEVEL | STEAM | BOILER 2 | VERABAR | 12,000 | 125,000 | 10 | ALTERNATE |
| B3A | CUP LOWER LEVEL | STEAM | BOILER 3 | VERABAR | 12,000 | 125,000 | 10 | ALTERNATE |
| HPSA | CUP LOWER LEVEL | STEAM | MAIN | VERABAR | 10,000 | 310,000 | 20 | ALTERNATE |
| | | | | | | | | |

## NATURAL GAS METERS

| MARK GM | LOCATION | SYSTEM | SERVICE | TYPE | MIN CAPACITY (SCFH) | MAX CAPACITY (SCFH) | LINE SIZE (IN) | REMARKS |
|---|---|---|---|---|---|---|---|---|
| B1 | CUP LOWER LEVEL | STEAM | BOILER 1 | ORFICE PLATE | 8,000 | 85,000 | 4 | BASE BID |
| B2 | CUP LOWER LEVEL | STEAM | BOILER 2 | ORFICE PLATE | 16,000 | 175,000 | 6 | BASE BID |
| B3 | CUP LOWER LEVEL | STEAM | BOILER 3 | ORFICE PLATE | 16,000 | 175,000 | 6 | BASE BID |
| B1A | CUP LOWER LEVEL | STEAM | BOILER 1 | VERABAR | 8,000 | 85,000 | 4 | ALTERNATE |
| B2A | CUP LOWER LEVEL | STEAM | BOILER 2 | VERABAR | 16,000 | 175,000 | 6 | ALTERNATE |
| B3A | CUP LOWER LEVEL | STEAM | BOILER 3 | VERABAR | 16,000 | 175,000 | 6 | ALTERNATE |
| | | | | | | | | |


CHAMPLIN
ARCHITECTURE

720 E Pete Rose Way, Suite 140
Cincinnati, OH 45202
T 513.241.4474 F 513.241.0081
thinkchamplin.com

THINK CREATE REALIZE

AEI Affiliated Engineers

THP

UNIVERSITY OF KENTUCKY


**CAMPUS INFRASTRUCTURE & C.U.P.**

BID PACKAGE 8

University of Kentucky

LEXINGTON, KENTUCKY

**ISSUANCES**

| No. | Description | Date |
|---|---|---|
| 1 | Issued for Bid and Permit | 01/12/18 |

Drawn By EJ

Checked By BK

Client Number 514

Project Number 5601

STATE OF KENTUCKY SCOTT BOOTH 31321 LICENSED PROFESSIONAL ENGINEER 06/30/2019

BP-8 - INSTRUMENTATION CONTROL SCHEDULE

IC900.8

# PLUMBING SYMBOLS AND ABBREVIATIONS

NOTE: SYMBOLS AND ABBREVIATIONS INDICATED HERE AND NOT USED IN THE CONTRACT DOCUMENTS DO NOT APPLY TO THIS PROJECT. ADDITIONAL SYMBOLS MAY BE INDICATED IN THE CONTRACT DOCUMENTS.

## PIPE FITTINGS

FLANGE
UNION
ANCHOR
PIPE GUIDE
PIPE SLEEVE
ECCENTRIC REDUCER
CONCENTRIC REDUCER
ELBOW DOWN
ELBOW UP
TEE DOWN
TEE UP
PIPE CAP
SOIL, STORM, OR WASTE PLUG

## PIPE VALVES AND SPECIALTIES

GAS SHUT OFF VALVE
GATE VALVE
DIAPHRAGM VALVE
BALL VALVE
BUTTERFLY VALVE
BALANCING VALVE
CHECK VALVE
PRESSURE REDUCING VALVE
SOLENOID VALVE
PRESSURE RELIEF VALVE
THERMOSTATIC MIXING VALVE
TEMPERATURE BLENDING VALVE
BACKWATER VALVE
REDUCED PRESSURE BACKFLOW PREVENTER
DOUBLE CHECK BACKFLOW PREVENTER
PIPELINE STRAINER
MECHANICAL SHOCKSTOP
ZVB — ZONE VALVE BOX LABEL IS SHOWN ON FRONT OF VALVE BOX TO INDICATE ORIENTATION
AAP OR MAP — AREA OR MASTER ALARM PANEL LABEL IS SHOWN ON FRONT OF PANEL TO INDICATE ORIENTATION
PIPE FLEXIBLE CONNECTION
EXPANSION JOINT
FLOW SENSING DEVICE
PRESSURE OR VACUUM SWITCH
HEAT TRACE TERMINATION POINT
HEAT TRACE POWER CONNECTION POINT
THERMOMETER
PRESSURE GAUGE (WITH VALVE)
WALL HYDRANT
HOSE BIBB
ROOF HYDRANT
GROUND HYDRANT
SLIDE-OXYGEN OR VACUUM BOTTLE
GAS OUTLET
GAS TERMINAL
FILTER
DIRECTION OF PITCH
WATER METER (M)
DEMOLITION OF PIPING, DEVICE, ETC.

## DRAINS AND CLEANOUTS

FLOOR DRAIN/FLOOR SINK
ROOF DRAIN
HUB DRAIN
FIXTURE WASTE TRAP
CLEANOUT
FLOOR CLEANOUT

## FIXTURE INSTALLATION

| FIXTURE | BARRIER FREE DESIGN | NON-BARRIER FREE |
|---|---|---|
| WATER CLOSET | FLOOR TO RIM 17" | FLOOR TO RIM 15" |
| URINAL | FLOOR TO RIM 17" MIN. ONE PER ROOM | FLOOR TO RIM 24" |
| LAVATORY | FLOOR TO RIM 34" MAX. FLOOR TO UNDER APRON 29" | FLOOR TO RIM 31" |
| DRINKING FOUNTAIN | FLOOR TO SPOUT 36" MAX. FLOOR TO UNDER APRON 27" | FLOOR TO RIM 40" |
| SHOWER VALVE | FLOOR TO VALVE 42" | FLOOR TO VALVE 48" |
| SHOWER HEAD | FLOOR TO HEAD 60" ON HOSE ADJ. 48" | FLOOR TO HEAD 78" VARIES |

## PIPING SYSTEM LABELS

| NEW | EXISTING | |
|---|---|---|
| DCW | XDCW | DOMESTIC COLD WATER |
| DHW | XDHW | DOMESTIC HOT WATER |
| DHR | XDHR | DOMESTIC HOT WATER RETURN |
| CS | XCS | COLD SOFT WATER |
| HT | XHT | HEAT TRACE HOT WATER |
| NP | XNP | NON-POTABLE WATER |
| DI | XDI | DEIONIZED WATER |
| ROS | XROS | REVERSE OSMOSIS WATER SUPPLY |
| ROR | XROR | REVERSE OSMOSIS WATER RETURN |
| PW | XPW | PURE WATER |
| PCW | XPCW | PROCESS COLD WATER |
| PHW | XPHW | PROCESS HOT WATER |
| PHR | XPHR | PROCESS HOT WATER RETURN |
| LCW | XLCW | LAB COLD WATER |
| LHW | XLHW | LAB HOT WATER |
| LHR | XLHR | LAB HOT WATER RETURN |
| TF | XTF | TRAP FILLER LINE |
| WGE | XWGE | WASTE GAS EVACUATION |
| LA | XLA | LAB COMPRESSED AIR |
| MA | XMA | MEDICAL COMPRESSED AIR |
| CA | XCA | PROCESS COMPRESSED AIR |
| LVAC | XLVAC | LAB VACUUM |
| MV | XMV | MEDICAL VACUUM |
| SAN | XSAN | WASTE OR SOIL LINE |
| SD | XSD | SUBSOIL DRAIN LINE |
| S | XS | STORM DRAINAGE (GRAVITY TYPE) |
| SS | XS | STORM DRAINAGE (SIPHONIC) |
| OD | XOD | OVERFLOW DRAIN LINE |
| PD | XPD | PRESSURIZED DISCHARGE |
| FM | XFM | FORCE MAIN |
| CWW | XCWW | CLEARWATER WASTE |
| IW | XIW | INDIRECT WASTE |
| CRW | XCRW | CORROSION RESISTANT WASTE |
| PW | XPW | UNDERFLOOR FOR WASTE OR SOIL, |
| | | STORM & FORCE MAIN |
| | | SUBSOIL |
| V | XV | VENT |
| CWV | XCWV | CLEARWATER VENT |
| CRV | XCRV | CORROSION RESISTANT VENT |
| PV | XPV | PROCESS VENT |
| LV | XLV | LAB VENT |
| VC | XVC | VACUUM CLEANING |
| H2 | XH2 | HYDROGEN |
| O2 | XO2 | OXYGEN |
| N2 | XN2 | NITROGEN |
| NG | XNG | NATURAL GAS |

## CIVIL UTILITIES SYSTEMS

| NEW | EXISTING | |
|---|---|---|
| W | XW | WATER LINE |
| SAN | XSAN | SANITARY SEWER |
| STM | XSTM | STORM SEWER |
| FM | XFM | FORCE MAIN |
| F | XF | FIRE MAIN |
| | | SHUTOFF VALVE |
| PIV | XPIV | POST INDICATOR VALVE |
| | | FIRE HYDRANT |
| | | MANHOLE |
| | | CATCH BASIN OR INLET |
| | | CURB INLET |

## REFERENCE SYMBOLS

REFER / SHT # — GENERAL REFERENCE DESIGNATES SHEET NUMBER
# / X0.0 — DETAIL REFERENCE TOP DESIGNATES DETAIL NUMBER BOTTOM DESIGNATES SHEET NUMBER
# / X0.0 — SECTION REFERENCE TOP DESIGNATES SECTION NUMBER BOTTOM DESIGNATES SHEET NUMBER
ELEVATION SYMBOL
NEW CONNECTION TO EXISTING
NAME / # — EQUIPMENT NAME AND NUMBER
### — LAB EQUIPMENT NUMBER
# — SHEET KEYNOTE NUMBER
# — REVISION NUMBER
# — CONSTRUCTION BULLETIN NUMBER

## ABBREVIATIONS

A - AIR
AAP - AREA ALARM PANEL
ACC - ACCESS
ACFM - ACTUAL CUBIC FEET PER MINUTE
ADB - ACID DILUTION BASIN
ADJ - ADJUSTABLE
AFF - ABOVE FINISHED FLOOR
ALT - ALTERNATE
AMPS - AMPERES
AP - ACCESS PANEL
APPROX - APPROXIMATE
ARCH - ARCHITECTURAL
ASME - AMERICAN SOCIETY OF MECHANICAL ENGINEERS
ASSY - ASSEMBLY

BHP - BRAKE HORSEPOWER
BLDG - BUILDING
BOP - BOTTOM OF PIPE ELEVATION
BOT - BOTTOM
BT - BATHTUB
BTU - BRITISH THERMAL UNIT
BTUH - BRITISH THERMAL UNITS PER HOUR
BTWN - BETWEEN

CA - COMPRESSED AIR
CFCI - CONTRACTOR FURNISHED CONTRACTOR INSTALLED
CFM - CUBIC FEET PER MINUTE
CLG - CEILING
CMU - CONCRETE MASONRY UNIT
CO - CLEANOUT
CO2 - CARBON DIOXIDE
CONN - CONNECTION/CONNECT
CONTR - CONTRACTOR
CORR - CORRIDOR
CS - CLINICAL SINK/COLD SOFT WATER
CTR - CENTER
CU - COPPER
CRVTR - CORROSIVE VENT THROUGH ROOF
CWW - CLEARWATER WASTE

D - DEPTH/DRAIN LINE
DCW - DOMESTIC COLD WATER
DET - DETAIL
DFU - DRAINAGE FIXTURE UNIT
DHR - DOMESTIC HOT WATER RETURN
DHW - DOMESTIC HOT WATER
DIA - DIAMETER
DIM - DIMENSION
DISCH - DISCHARGE
DN - DOWN
DS - DOWNSPOUT
DWG - DRAWING

EA - EACH
EEW - EMERGENCY EYEWASH
EFF - EFFICENCY
EJ - EXPANSION JOINT
ELEC - ELECTRICAL
ELEV - ELEVATION
EQUIP - EQUIPMENT
ET - EXPANSION TANK
ETR - EXISTING TO REMAIN
ES - EMERGENCY SHOWER
EWC - ELECTRIC WATER COOLER
EWT - ENTERING WATER TEMPERATURE
EXP - EXPANSION
EXT - EXTERIOR

°F - FAHRENHEIT
FCO - FLOOR CLEANOUT
FD - FLOOR DRAIN
FLA - FULL LOAD AMPERES
FLR - FLOOR
FM - FORCE MAIN
FP - FIREPROOF
FPM - FEET PER MINUTE
FT - FEET
FTHD - FEET HEAD
FTG - FOOTING

G - GAS
GA - GAUGE
GAL - GALLON
GALV - GALVANIZED
GCO - GROUND CLEANOUT
GPH - GALLONS PER HOUR
GPM - GALLONS PER MINUTE

HB - HOSE BIBB
HD - HUB DRAIN
HP - HORSEPOWER
HR - HOSE REEL
HT - HEAT TRACE HOT WATER
HTR - HEATER
HVAC - HEATING VENTILATING & AIR CONDITIONING
HZ - HERTZ

ID - INSIDE DIAMETER
IE - INVERT ELEVATION
IN - INCHES
IN WC - INCHES WATER COLUMN
IW - INDIRECT WASTE

KW - KITCHEN WASTE

L - LENGTH
LA - LABORATORY AIR
LAV - LAVATORY
LBS - POUNDS
LTG - LIGHTING
LV - LABORATORY VACUUM
LWT - LEAVING WATER TEMPERATURE

MAP - MASTER ALARM PANEL
MAX - MAXIMUM
MB - MOP BASIN
MBH - ONE THOUSAND BTUH
MEZZ - MEZZANINE
MFR - MANUFACTURER
MH - MANHOLE
MIN - MINIMUM/MINUTE
MISC - MISCELLANEOUS
MTD - MOUNTED
MTG - MOUNTING

NC - NORMALLY CLOSED
NIC - NOT IN CONTRACT
NO - NUMBER
NOM - NOMINAL
NPSH - NET POSITIVE SUCTION HEAD
NPT - NATIONAL PIPE THREAD
NTS - NOT TO SCALE

OC - ON CENTER
OD - OUTSIDE DIAMETER/OVERFLOW DRAIN
OFCI - OWNER FURNISHED CONTRACTOR INSTALLED
OFOI - OWNER FURNISHED OWNER INSTALLED

P - PUMP
PD - PRESSURIZED DISCHARGE
PH - PHASE
PIV - POST INDICATOR VALVE
PLBG - PLUMBING
PRESS - PRESSURE
PRV - PRESSURE REDUCING VALVE
PSF - POUNDS PER SQUARE FOOT
PSI - POUNDS PER SQUARE INCH
PSIG - POUNDS PER SQUARE INCH GAUGE
PW - PURE WATER

R - RADIUS
RAD - REFRIGERATED AIR DRYER
RD - ROOF DRAIN
REC - RECESSED
RECPT - RECEPTACLE
REF - REFERENCE
REQD - REQUIRED
RI - ROUGH-IN
RPM - REVOLUTIONS PER MINUTE
RV - RELIEF VALVE

S - STORM
SA - MECHANICAL SHOCK ARRESTOR
SAN - SANITARY
SCH - SCHEDULE
SCFM - STANDARD CUBIC FEET PER MINUTE
SD - SUBSOIL DRAIN
SF - SQUARE FEET
SH - SHOWER
SHT - SHEET
SPEC - SPECIFICATION
SQ - SQUARE
SR - SERVICE RECEPTOR
S/S - STAINLESS STEEL
STD - STANDARD
STRU - STRUCTURAL/STRUCTURE
SUCT - SUCTION

TD - TRENCH DRAIN
TDH - TOTAL DYNAMIC HEAD
TEMP - TEMPERATURE
TMV - THERMOSTATIC MIXING VALVE
TOB - TOP OF BEAM
TOD - TOP OF DECK
TOJ - TOP OF JOIST
TOS - TOP OF SLAB/TOP OF STEEL
TF - TRAP FILLER
TP - TRAP PRIMER
TYP - TYPICAL

UR - URINAL

V - VENT / VACUUM / VOLTS
VAC - VACUUM
VEL - VELOCITY
VFD - VARIABLE FREQUENCY DRIVE
VIB - VALVE-IN-BOX
VOL - VOLUME
VTR - VENT THRU ROOF

W - WASTE/WATER
W/ - WITH
W/O - WITHOUT
WAGD - WASTE ANESTHETIC GAS DISPOSAL
WC - WATER CLOSET
WCO - WALL CLEANOUT
WGE - WASTE GAS EXHAUST
WH - WALL HYDRANT
WSFU - WATER SUPPLY FIXTURE UNIT

X - EXISTING

YCO - YARD CLEANOUT

ZVB - ZONE VALVE BOX

CHAMPLIN ARCHITECTURE
720 E Pete Rose Way, Suite 140
Cincinnati, OH 45202
T 513.241.4474 F 513.241.0081
thinkchamplin.com
THINK CREATE REALIZE

Affiliated Engineers

THP

CAMPUS INFRASTRUCTURE & C.U.P.
BID PACKAGE 8
University of Kentucky
LEXINGTON, KENTUCKY

**ISSUANCES**

| No. | Description | Date |
|---|---|---|
| 1. | Issued for Bid and Permit | 01/12/18 |

Drawn By EB
Checked By SF
Client Number 514
Project Number 5601

STATE OF KENTUCKY — SCOTT FOSTER — 31321 — LICENSED PROFESSIONAL ENGINEER — 06/30/2019

PLUMBING SYMBOLS AND ABBREVIATIONS

P000.8

1/12/2018 1:48:01 PM

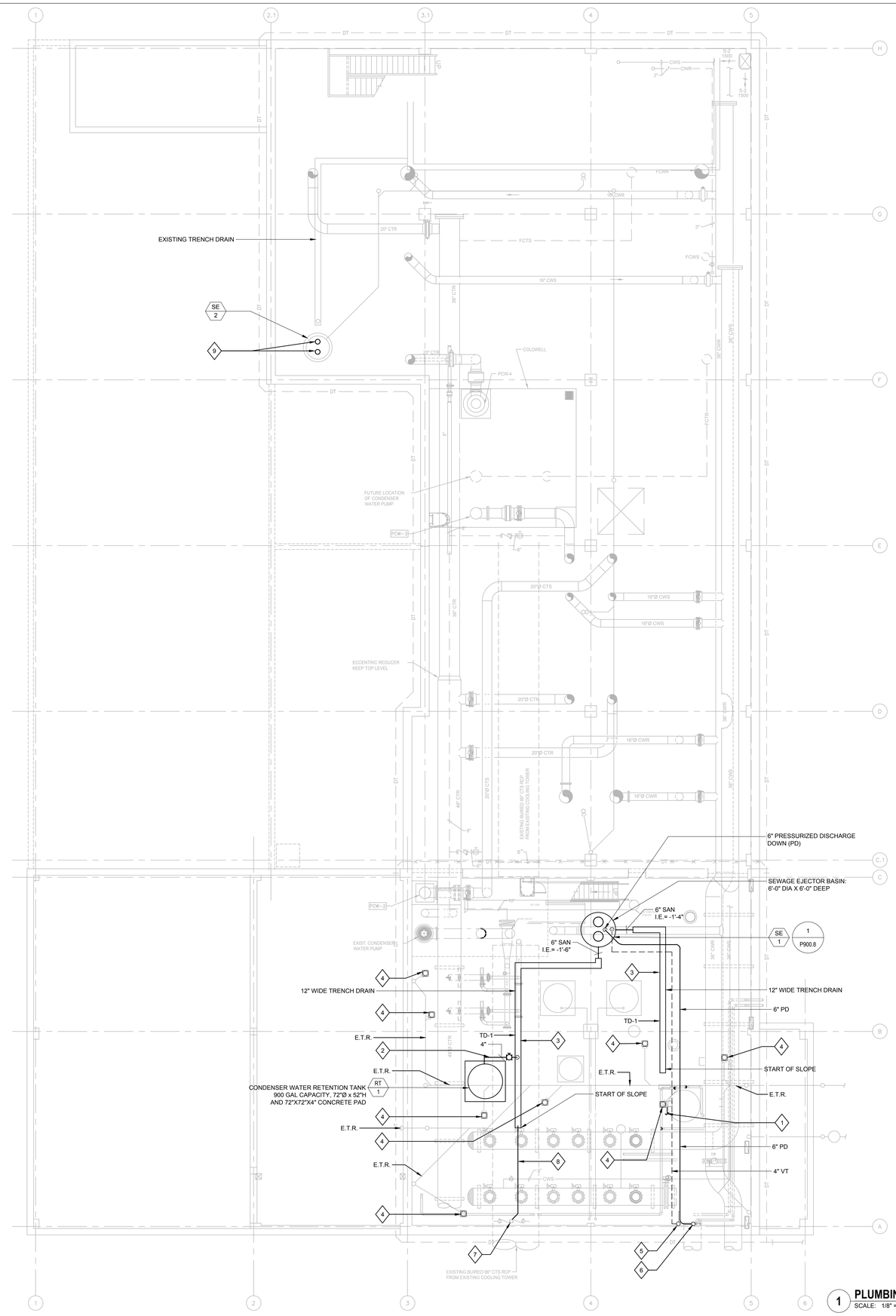


1 **PLUMBING PLAN CUP BUILDING BASEMENT**
SCALE: 1/8" = 1'-0"

## KEY NOTES

1. DRAIN LINE FROM MECHANICAL EQUIPMENT TO INDIRECTLY DRAIN INTO TRENCH DRAIN WITH AN AIR GAP. SEE MECHANICAL DRAWINGS FOR DRAIN LOCATION.
2. DRAIN LINE FROM RETENTION TANK WITH BALL VALVE TO INDIRECTLY DRAIN INTO TRENCH DRAIN WITH AN AIR GAP.
3. SAWCUT, EXCAVATE, REMOVE EXCESS, INSTALL TD-1 SEAL AND PATCH FLOOR TO MATCH EXISTING. (TYP FOR ALL TD-1). SEE STRUCTURAL DRAWINGS FOR DETAIL OF TRENCH DRAIN.
4. REMOVE GRATE FROM FLOOR DRAIN. FURNISH AND INSTALL AN AIR TIGHT PLUG.
5. 4" VENT UP TO ROOF. FOR CONTINUATION SEE SHEET P400.8 ENLARGE PLAN #2.
6. 6" PRESSURIZED DISCHARGE UP TO SPLINE BRIDGE. FOR CONTINUATION SEE SHEET P400.8 ENLARGE PLAN #2.
7. CONTRACTOR TO CONNECT TO EXISTING AIR GAP FITTING FROM RPZ AND ROUTE PIPING TO NEW TRENCH DRAIN.
8. DRAINAGE PIPE FROM RPZ. VERIFY SIZE OF DRAINAGE CONNECTION IN FIELD.
9. REMOVE EXISTING DUPLEX PUMPS AND FURNISH AND INSTALL NEW PUMP. SEE SCHEDULE ON SHEET P900.8

CHAMPLIN
ARCHITECTURE
720 E Pete Rose Way, Suite 140
Cincinnati, OH 45202
T 513.241.4474 F 513.241.0081
thinkchamplin.com
THINK CREATE REALIZE

AEI Affiliated Engineers

THP

UNIVERSITY OF KENTUCKY

**CAMPUS INFRASTRUCTURE & C.U.P.**

BID PACKAGE 8

University of Kentucky

LEXINGTON, KENTUCKY

**ISSUANCES**

| No. | Description | Date |
|---|---|---|
| 1 | Issued for Bid and Permit | 01/12/18 |

Drawn By EJB

Checked By SF

Client Number 514

Project Number 5601

STATE OF KENTUCKY SCOTT FOSTER 31511 LICENSED PROFESSIONAL ENGINEER 06/30/2019

PLUMBING PLAN CUP BUILDING BASEMENT

P200.8

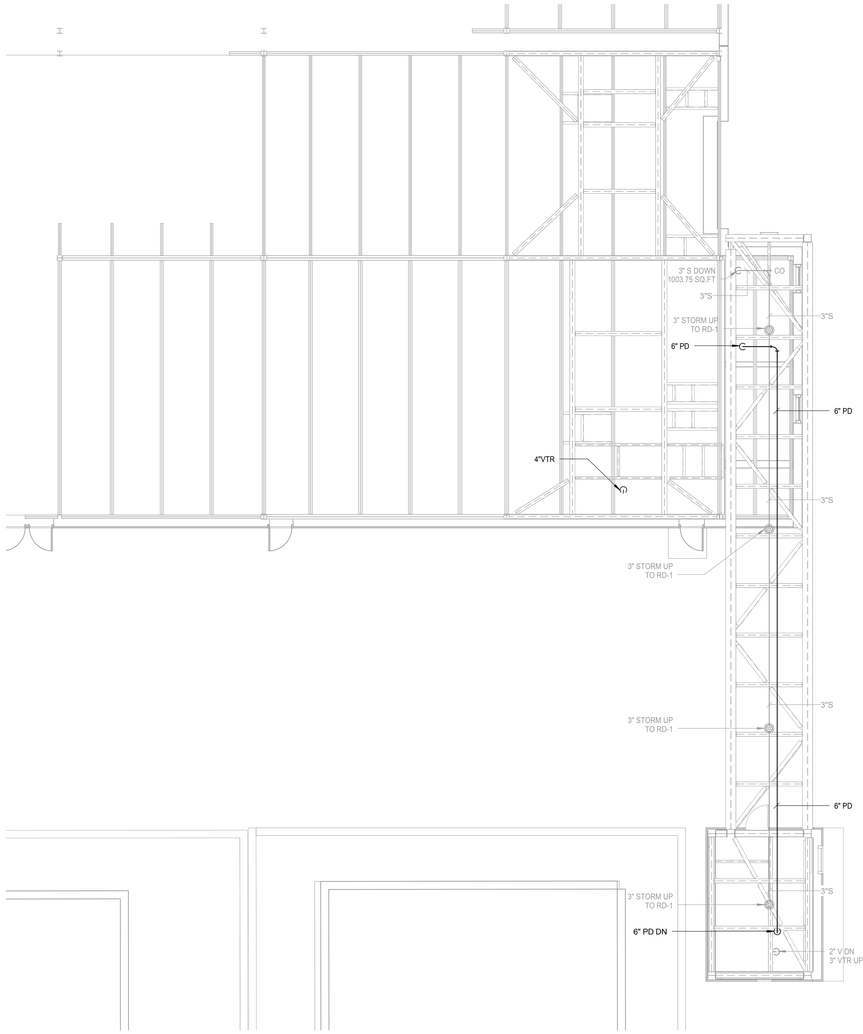


1 PLUMBING ROOF PLAN
1/8" = 1'-0"

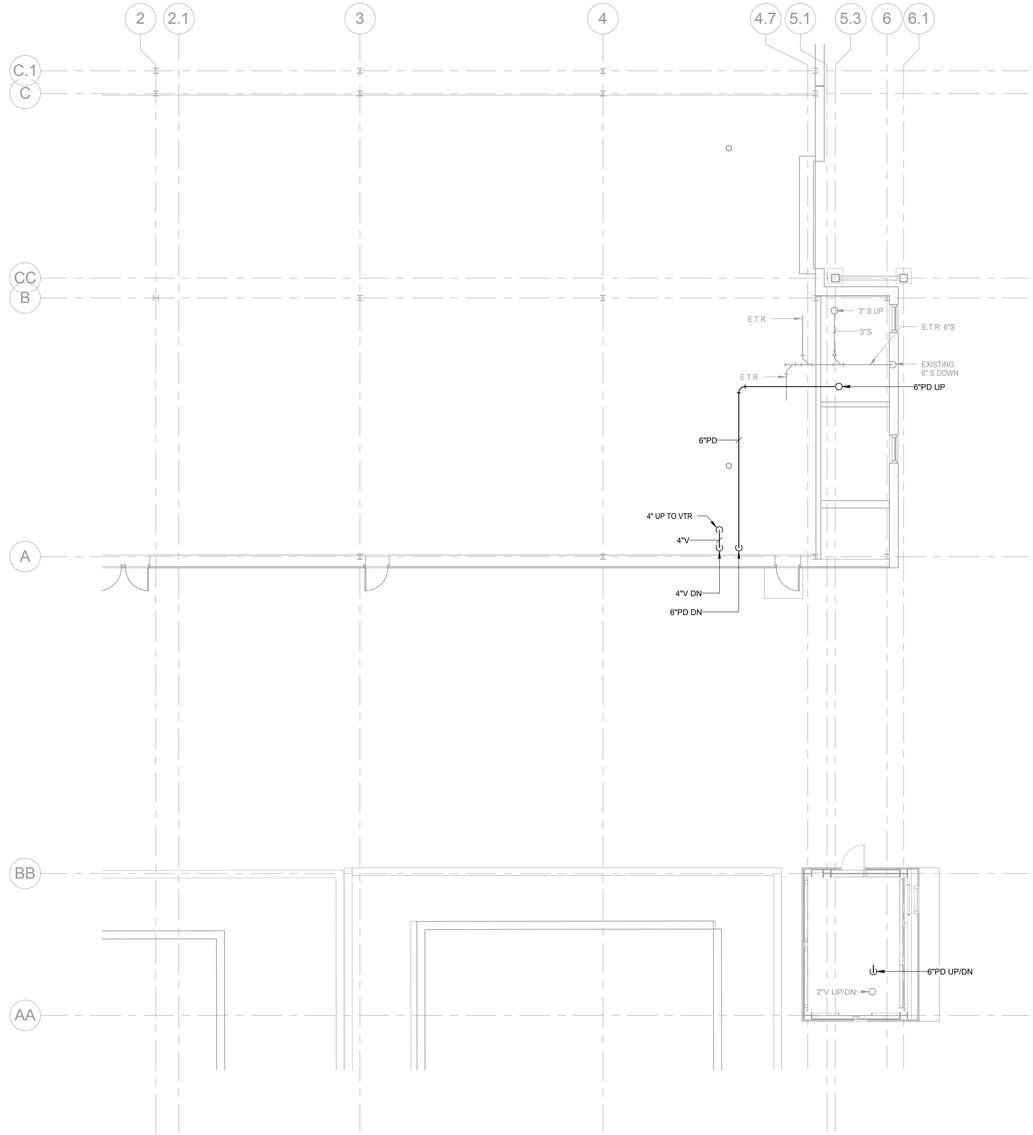


2 PLUMBING PLAN LEVEL 01
1/8" = 1'-0"

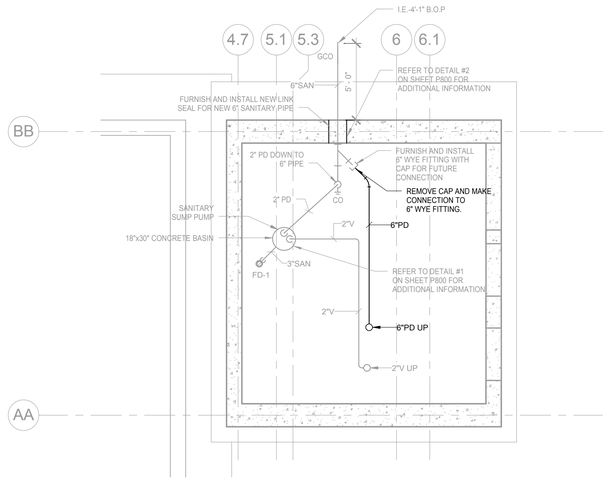


3 PLUMBING PLAN PIT LEVEL
1/4" = 1'-0"

CHAMPLIN
ARCHITECTURE

720 E Pete Rose Way, Suite 140
Cincinnati, OH 45202
T 513.241.4474 F 513.241.0081
thinkchamplin.com

THINK CREATE REALIZE

AEI Affiliated Engineers

THP

CAMPUS INFRASTRUCTURE & C.U.P.

BID PACKAGE 8

University of Kentucky

LEXINGTON, KENTUCKY

ISSUANCES

| No. | Description | Date |
|---|---|---|
| 1. | Issued for Bid and Permit | 01/12/18 |

Drawn By EB

Checked By SF

Client Number 514

Project Number 5601

STATE OF KENTUCKY
SCOTT FOSTER
31321
LICENSED
PROFESSIONAL ENGINEER
06/30/2019

PLUMBING ENLARGED PLANS

P400.8

1/12/2018 1:47:56 PM

## SEWAGE EJECTOR

| TAG | SERVICE | LOCATION | BASIS OF DESIGN MANUFACTURER AND MODEL | TYPE | CAPACITY (GPM) | HEAD (FEET) | DISCHARGE SIZE (IN) | SOLIDS SIZE (IN) | MOTOR HP | MOTOR RPM | MOTOR VOLT | MOTOR PH | REMARKS |
|---|---|---|---|---|---|---|---|---|---|---|---|---|---|
| SE-1 | SANITARY | BASEMENT | WEIL PUMP & 2228 | 3 | 600 | 70 | 4 | 2 1/2 | 30 | 1750 | 480 | 3 | |
| SE-2 | SANITARY | BASEMENT | ZOELLER & G641 | 1 | 250 | 25 | 4 | 2 1/2 | 3 | 1750 | 460 | 3 | REMOVE EXISTING DUPLEX PUMPS. FURINSH AND INSTALL NEW DUPLEX PUMPS FOR SE-2 |

PUMP TYPES
1 = SUBMERSIBLE SEWAGE EJECTOR
2 = SUBMERSIBLE EFFLUENT PUMP
3 = VERTICAL SEWAGE EJECTOR
4 = VERTICAL EFFLUENT PUMP
5 = SELF PRIMING PUMP

## DRAINS

| TAG | BASIS OF DESIGN MANUFACTURER AND MODEL | DESCRIPTION |
|---|---|---|
| TD-1 | J.R SMITH 9879 | 14" WIDE PRE-SLOPED POLYMER CONCRETE TRENCH DRAIN SYSTEM WITH DUCTILE IRON EDGE RAIL |

## PUMP BASIN

| TAG | SERVICE | LOCATION | TYPE | DIAMETER | DEPTH | REMARKS |
|---|---|---|---|---|---|---|
| SE-1 | SANITARY | BASEMENT | FIBERGLASS | 6'-0" | 6'-0" | FURINISH AND INSTALL ANTI-FLOATATION FLANGE |

## TANKS

| TAG | SERVICE | WORKING VOLUME (GAL) | PRESSURE RATING | ASME STAMP | DIMENSIONS (INCHES) OUTSIDE DIAMETER | DIMENSIONS (INCHES) HEIGHT / LENGTH | DIMENSIONS (INCHES) LEG HEIGHT | CONNECTIONS INLET | CONNECTIONS OUTLET | CONNECTIONS DRAIN | CONNECTIONS VENT | CONNECTIONS OTHER | REMARKS |
|---|---|---|---|---|---|---|---|---|---|---|---|---|---|
| RT-1 | SANITARY | 900 | N/A | N/A | 72" | 52" | N/A | N/A | 4" | N/A | N/A | N/A | FURNISH AND INSTALL RETENTION TANK, PROVIDE 4" OUTLET PIPE WITH BALL VALVE 6" ABOVE BOTTOM OF TANK. |

NOTES:
(1) REFER TO DRAWING P200.8 FOR CONNECTION SIZES.

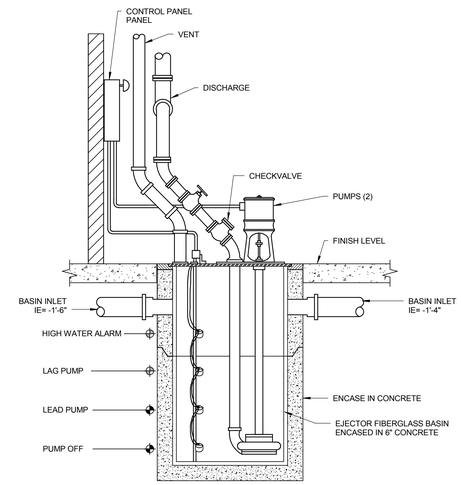


1 SEWAGE EJECTOR
NOT TO SCALE


CHAMPLIN
ARCHITECTURE

720 E Pete Rose Way, Suite 140
Cincinnati, OH 45202
T 513.241.4474 F 513.241.0081
thinkchamplin.com

THINK CREATE REALIZE

AEI Affiliated Engineers

THP


CAMPUS INFRASTRUCTURE & C.U.P.

BID PACKAGE 8

University of Kentucky

LEXINGTON, KENTUCKY

ISSUANCES

| No. | Description | Date |
|---|---|---|
| 1. | Issued for Bid and Permit | 01/12/18 |

Drawn By EB

Checked By SF

Client Number 514

Project Number 5601

STATE OF KENTUCKY SCOTT HUSTED 31321 LICENSED PROFESSIONAL ENGINEER 06/30/2019

PLUMBING SCHEDULES & DETAILS

P900.8

1/12/2018 1:47:52 PM

## GENERAL STRUCTURAL NOTES

A. CODES AND SPECIFICATIONS

1. 2013 KENTUCKY BUILDING CODE, WITH UPDATES THROUGH APRIL 2017.
2. ACI 301-16, SPECIFICATIONS FOR STRUCTURAL CONCRETE FOR BUILDINGS, AS MODIFIED BY THE CONSTRUCTION DOCUMENTS.
3. AISC 303-16, CODE OF STANDARD PRACTICE FOR STEEL BUILDINGS AND BRIDGES, AS MODIFIED BY THE CONSTRUCTION DOCUMENTS.

B. FOUNDATIONS

1. CONCRETE FOR TRENCH, TRENCH DRAIN, AND TANK BASE IS TO BE CAST ON FIRM SOIL OR WELL COMPACTED ENGINEERED FILL. SOILS UNSUITABLE FOR SUPPORT SHALL BE REMOVED AND BACKFILLED TO DESIGN BEARING ELEVATION WITH CONCRETE.
2. ALL BEARING SURFACES SHALL BE UNDISTURBED AND LEVEL (WITHIN 1 IN 12) PRIOR TO PLACING CONCRETE.

C. CONCRETE AND REINFORCING

1. CONCRETE: MINIMUM 4000 PSI STRENGTH AT 28 DAYS. MAXIMUM W/C RATIO OF 0.50. MAXIMUM WATER-SOLUBLE CHLORIDE ION CONTENT OF 0.30.
2. ALL REINFORCING BARS: 60 KSI YIELD.
3. PROVIDE TENSION SPLICES FOR ALL BARS.
4. PROVIDE MINIMUM CLEARANCES BETWEEN REINFORCING STEEL AND CONCRETE SURFACES AS SHOWN. IF NOT SHOWN, PROVIDE CLEAR COVER PER ACI. PLACE ALL REINFORCING AS SHOWN AND DETAILED, AND WITHIN ACI TOLERANCE.
5. PROVIDE 3/4" BEVELS AT EXPOSED CORNERS AND EDGES OF CONCRETE. TOP EDGES MAY BE ROUNDED WITH AN EDGER.

D. STRUCTURAL STEEL

1. MATERIAL:
   a. WIDE FLANGE SHAPES: ASTM A992 (Fy 50 KSI).
   b. OTHER ROLLED SHAPES & PLATES: ASTM A36 (Fy 36 KSI).
   c. HEADED SHEAR STUDS: ASTM A108, COMPLY WITH AWS D1.1, TYPE B.
   d. BOLTS: ASTM A325, 3/4" DIA.
   e. CHECKER FLOOR PLATE: ASTM A786, COMMERCIAL GRADE, GALVANIZED.
2. GALVANIZE STEEL WHERE INDICATED. PRIME PAINT ALL STEEL NOT GALVANIZED.
3. WELDING: ALL WELDING MATERIALS, WELDING PROCEDURES AND OPERATORS PERFORMING WELDING TO BE QUALIFIED PER AWS D1.1.
4. MECHANICAL ANCHORS TO CONCRETE SHALL BE ONE OF THE FOLLOWING:
   a. HILTI KWIK BOLT TZ EXPANSION ANCHORS.
   b. POWERS POWER-STUD+ SD2 WEDGE EXPANSION ANCHORS.
   c. SIMPSON STRONG-BOLT 2 WEDGE ANCHORS.
5. HOLES INTO CONCRETE MUST NOT INTERFERE WITH REINFORCING BARS. THE CONTRACTOR SHALL USE FERRO-SCAN TO LOCATE REINFORCING BARS IN THE AREA. SHIFT BOLT PATTERN TO FIT AROUND REBAR. PROVIDE STANDARD SIZE HOLES IN THE STEEL PLATE (1/16" LARGER THAN ANCHOR DIAMETER).
6. HOLES INTO CONCRETE SHALL BE THE PROPER SIZE AND CLEANED WITH ALL DUST REMOVED. BRUSH AND BLOWOUT WITH COMPRESSED AIR REPEATEDLY, UNTIL THOROUGHLY CLEAN.

E. COORDINATION AND CONSTRUCTION

1. SEE MECHANICAL DRAWINGS FOR ADDITIONAL DETAILS, DIMENSIONS, EMBEDDED ITEMS AND OTHER INFORMATION. ALL DIMENSIONS, OPENING SIZES AND LOCATIONS SHALL BE VERIFIED WITH MECHANICAL, ELECTRICAL, PLUMBING AND OTHER DRAWINGS AND THE TRADE CONTRACTORS.
2. VERIFY LOCATION AND DEPTH OF ALL EXISTING UNDERGROUND UTILITIES BEFORE SAW CUTTING EXISTING SLAB ON GRADE. NOTIFY CONSTRUCTION MANAGER IF ANY EXISTING UTILITIES WILL CONFLICT WITH NEW TRENCH.
3. SHOP DRAWINGS PREPARED BY SUPPLIERS AND SUB CONTRACTORS SHALL BE REVIEWED BY THE TRADE CONTRACTOR AND GENERAL CONTRACTOR OR CONSTRUCTION MANAGER PRIOR TO SUBMITTING TO ARCHITECT/ENGINEER.
   a. FIELD VERIFY ALL EXISTING DIMENSIONS, ELEVATIONS AND CONDITIONS WHICH AFFECT FABRICATION AND SHOW ON SHOP DRAWINGS.
   b. VERIFY AND SHOW EXACT SIZE AND LOCATION OF ALL FLOOR OPENINGS, ANCHORS, DRAINS AND OTHER ITEMS IN CONFLICT WITH STRUCTURAL WORK.
   c. SUBMIT COMPLETE SHOP DRAWINGS WITH ANCHOR MANUFACTURERS' DATA, ETC. SHOW ALL CONNECTIONS, HOLE SIZES AND DETAILS NECESSARY TO FULLY DESCRIBE AND PROPERLY INSTALL THE WORK.
   d. STRUCTURAL ENGINEER'S REVIEW SHALL BE FOR GENERAL ARRANGEMENT AND CONFORMANCE WITH THE STRUCTURAL INTENT ONLY.
4. IN ACCORDANCE WITH GENERALLY ACCEPTED CONSTRUCTION PRACTICES, CONTRACTOR SHALL BE SOLELY AND COMPLETELY RESPONSIBLE FOR CONDITIONS OF THE JOB SITE, INCLUDING SAFETY OF ALL PERSONS AND PROPERTY DURING PERFORMANCE OF THE WORK. THIS REQUIREMENT SHALL APPLY CONTINUOUSLY AND NOT BE LIMITED TO WORKING HOURS.
5. THE ARCHITECT'S AND ENGINEER'S OBSERVATION AND REVIEW OF CONTRACTORS' PERFORMANCE DOES NOT INCLUDE REVIEW OF ADEQUACY OF CONTRACTOR'S SAFETY MEASURES IN, ON, OR NEAR THE CONSTRUCTION SITE.

F. QUALITY CONTROL AND ASSURANCE

1. THE CONTRACTOR SHALL PERFORM QUALITY CONTROL, TESTING AND INSPECTION OF ALL WORK AS REQUIRED BY THE CONTRACT DOCUMENTS, INCLUDING REFERENCED CODES, SPECIFICATIONS AND STANDARDS.
2. THE OWNER WILL EMPLOY A TESTING AND INSPECTION AGENCY TO PERFORM SERVICES INDICATED TO BE BY OWNER IN THE PROJECT SPECIFICATIONS.
3. THE OWNER WILL ALSO EMPLOY QUALIFIED SPECIAL INSPECTORS TO PERFORM INSPECTIONS IN ACCORDANCE WITH CHAPTER 17 OF THE BUILDING CODE. THE ITEMS REQUIRING SPECIAL INSPECTION ON THIS PROJECT INCLUDE:
   a. CONCRETE AND REINFORCING FOR CHILLER SUPPORT BEAMS.
   b. STRUCTURAL STEEL BEAM ANCHORS TO CONCRETE, WELDING AND BOLTING.
4. THE STRUCTURAL ENGINEER MAY GENERALLY OBSERVE THE PROGRESS OF THE WORK, BUT HIS OBSERVATION SHALL NOT BE CONSTRUED AS INSPECTION.

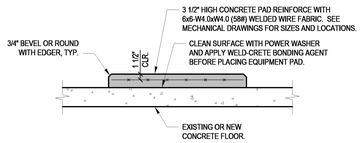


## MECHANICAL EQUIPMENT PAD

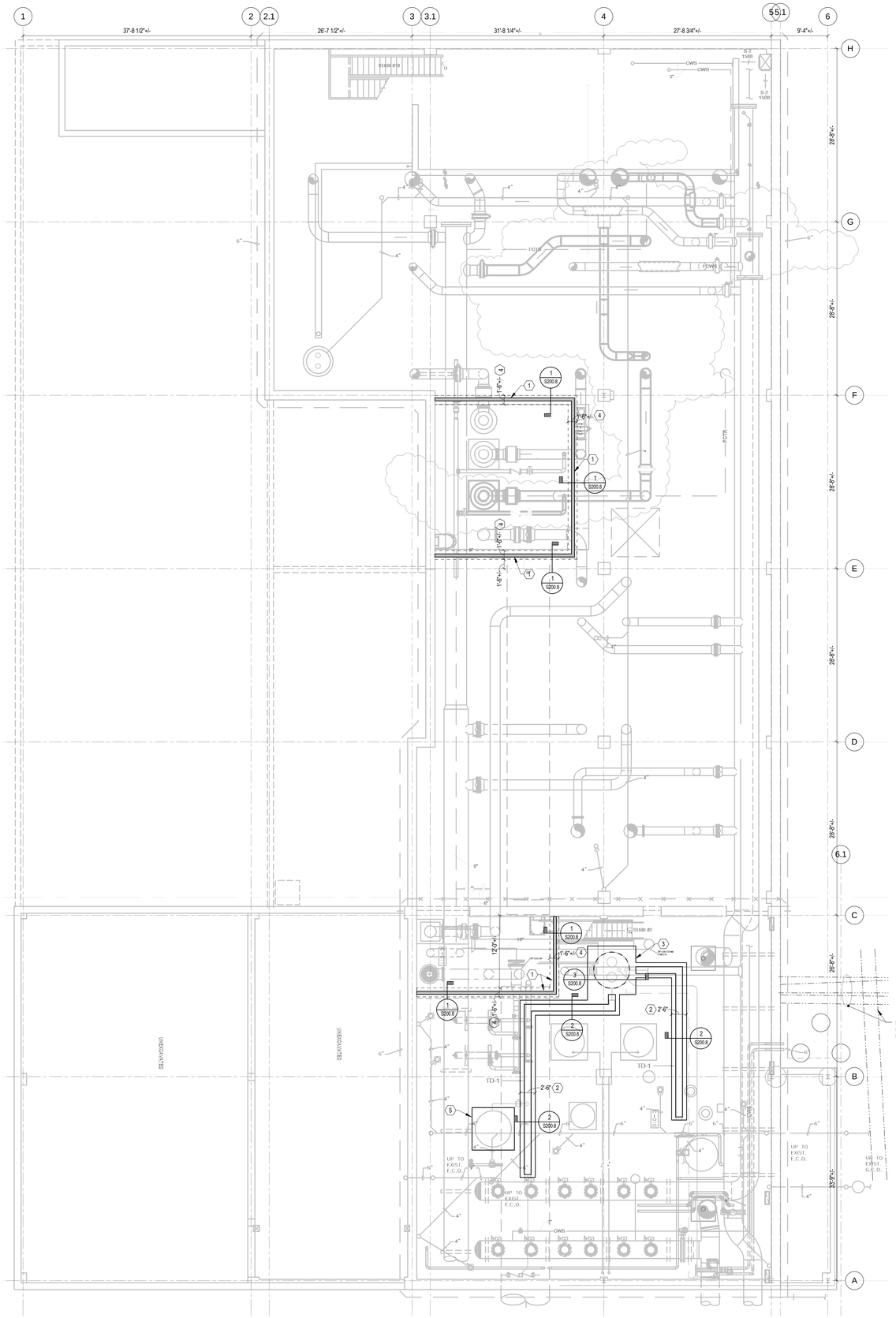


A S200.8 **FOUNDATION PLAN CUP BUILDING BASEMENT**
1/8" = 1'-0"

NORTH

DRAWING NOTES :

A. REFER TO DRAWING S200.8 FOR GENERAL STRUCTURAL NOTES.
B. REFER TO 'H' AND 'P' SERIES DRAWINGS FOR MECHANICAL AND PIPING INFORMATION.

KEY NOTES : ⬡

1. NEW 6" WIDE x 6" HIGH CONCRETE CURB.
2. SAWCUT SLOT IN SLAB ON GRADE AND CAST NEW TRENCH DRAIN.
3. SAWCUT AND REMOVE SLAB ON GRADE AND EXCAVATE 8'-0" x 8'-0" x 7'-0" DEEP FOR NEW SEWAGE EJECTOR BASIN, SEE PLUMBING DRAWINGS.
4. 18" WALL BELOW, DO NOT DISTURB.
5. PROVIDE NEW MECHANICAL EQUIPMENT PAD BELOW ALL NEW EQUIPEMENT, SEE MEP DRAWINGS.

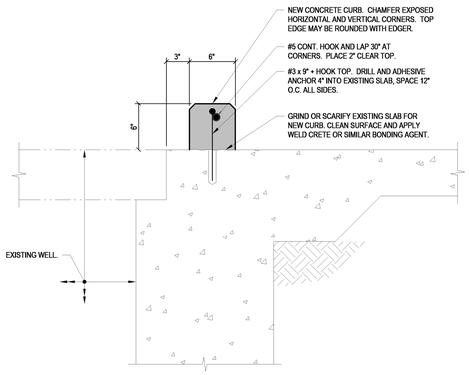


1 S200.8 **SECTION**
1 1/2" = 1'-0"

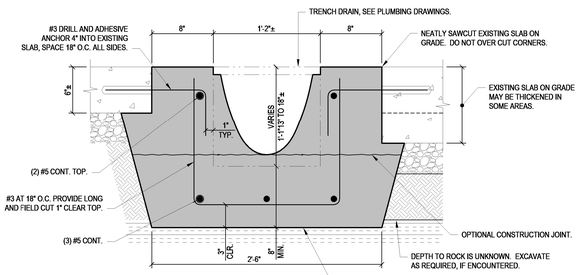


2 S200.8 **SECTION**
1 1/2" = 1'-0"

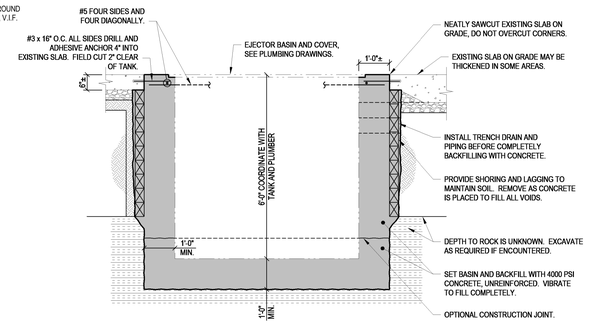


3 S200.8 **SECTION**
1/2" = 1'-0"

CHAMPLIN ARCHITECTURE
720 E Pete Rose Way, Suite 140
Cincinnati, OH 45202
T 513.241.4474 F 513.241.0081
thinkchamplin.com
THINK CREATE REALIZE

Affiliated Engineers

THP

UNIVERSITY OF KENTUCKY

**CAMPUS INFRASTRUCTURE & C.U.P.**

**BID PACKAGE 8**

University of Kentucky

LEXINGTON, KENTUCKY

**ISSUANCES**

| No. | Description | Date |
|---|---|---|
| 1 | Issued for Bid and Permit | 01/12/18 |

| | |
|---|---|
| Drawn By | JPH |
| Checked By | WAH |
| Client Number | 514 |
| THP Number | 15133.02 |

STATE OF KENTUCKY
GREGORY R. WAGNER
21849
LICENSED
PROFESSIONAL ENGINEER
1/12/2018

FOUNDATION PLAN CUP BUILDING BASEMENT

S200.8

1/12/2018 1:59:36 PM

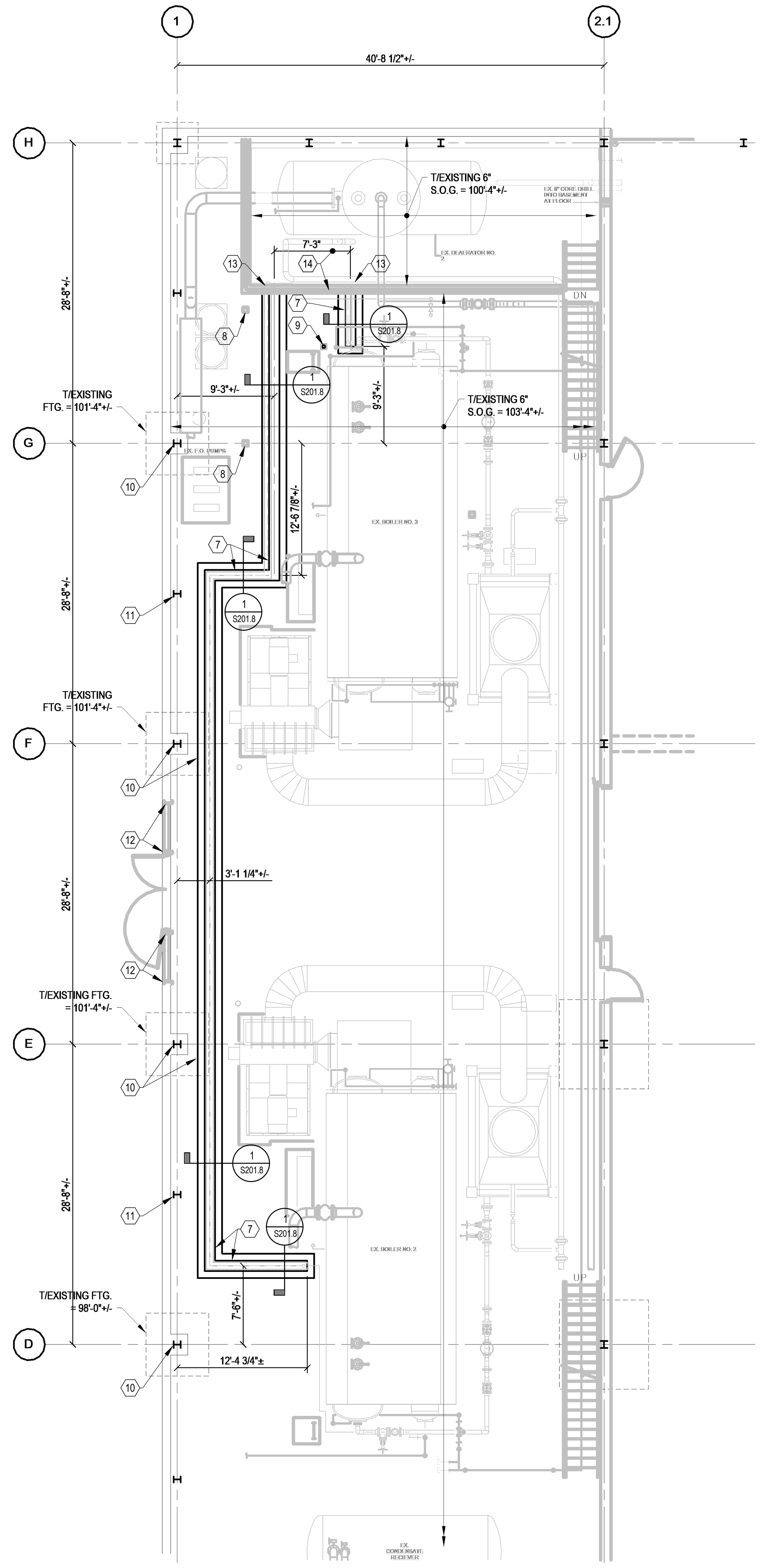


CUP PARTIAL FIRST FLOOR
## TRENCH PLAN
A / S201.8 — 1/8" = 1'-0"

NORTH

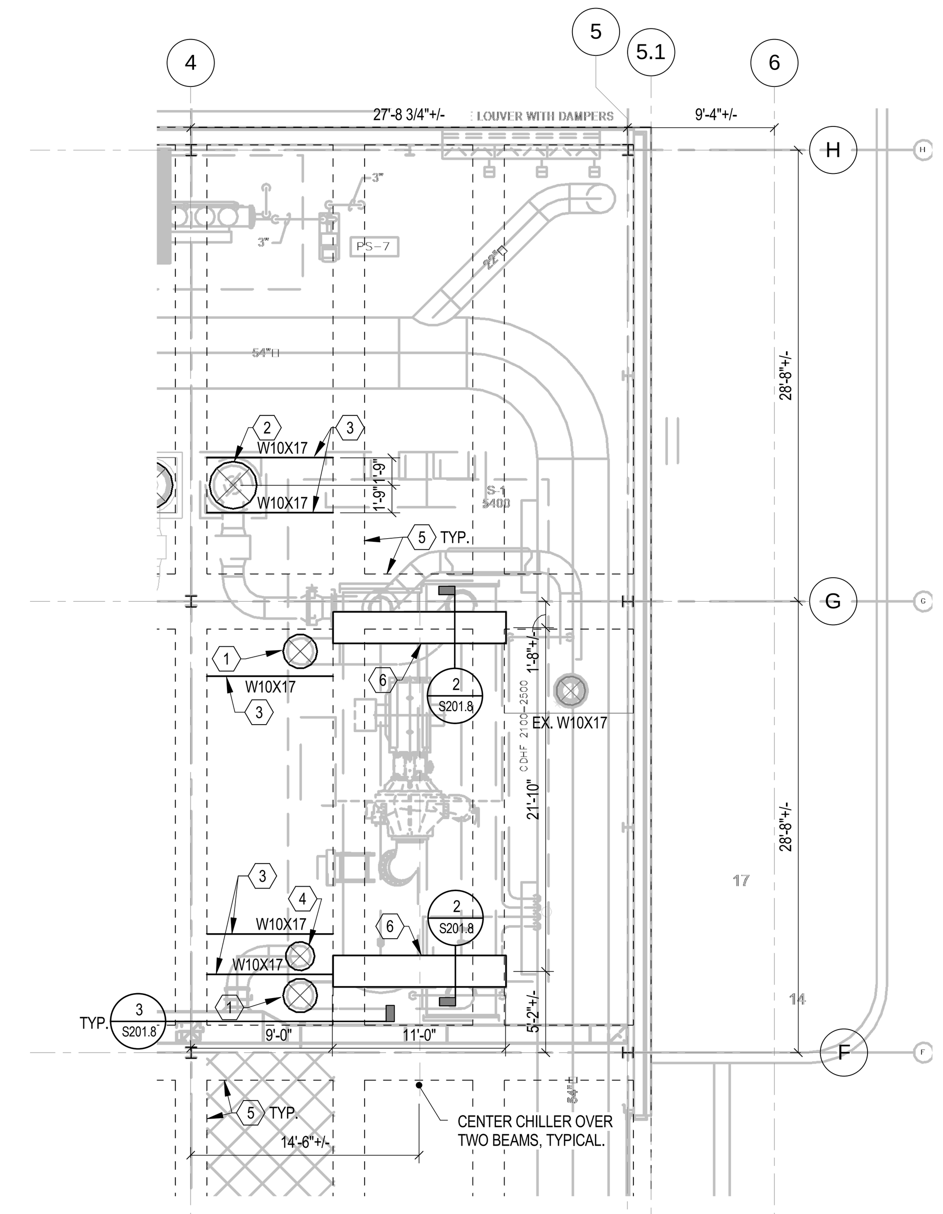


CUP PARTIAL FIRST FLOOR
## FRAMING PLAN
B / S201.8 — 1/8" = 1'-0"

NORTH

DRAWING NOTES :

A. REFER TO DRAWING S200.8 FOR GENERAL STRUCTURAL NOTES.

B. REFER TO 'H' AND 'P' SERIES DRAWINGS FOR MECHANICAL AND PIPING INFORMATION.

KEY NOTES :

1. 22"+/- CORED HOLE THROUGH EXISTING 8" CONCRETE SLAB.
2. 36"+/- CORED HOLE THROUGH EXISTING 8" CONCRETE SLAB.
3. SLAB TO BE REINFORCED LOCALLY WITH NEW STEEL BEAMS PLACED BELOW SLAB THAT SPAN BETWEEN EXISTING CONCRETE BEAMS.
4. 18"+/- CORED HOLE THOUGH EXISTING 8" CONCRETE SLAB.
5. OUTLINE OF EXISTING CONCRETE BEAMS SHOWN DASHED. DO NOT CORE DRILL OR OTHERWISE DISTURB EXISTING BEAMS.
6. NEW CONCRETE BEAM FOR CHILLER SUPPORT, SEE DETAIL. COORDINATE AND VERIFY LOCATION WITH MECHANICAL CONTRACTOR AND CHILLER.
7. NEW PIPE TRENCH, SEE SECTION 1/S201.8.
8. MEZZANINE COLUMN SUPPORTED ON SLAB ON GRADE. DO NOT UNDERMINE SUPPORTING SOIL BELOW SLAB.
9. PIPE SUPPORT BEARING ON SLAB ON GRADE. DO NOT UNDERMINE.
10. BUILDING COLUMN AND FOOTING BELOW SLAB. NEW TRENCH TO PASS ABOVE COLUMN FOOTING.
11. WIND COLUMN BEARING ON SLAB ON GRADE. DO NOT UNDERMINE.
12. WIND COLUMN BEARING ON CONCRETE WALL.
13. 8" CONCRETE WALL TO REMAIN. BUTT TRENCH TO SOUTH SIDE OF WALL AND CORE DRILL WALL FOR NEW PIPES.
14. VERIFY LOCATION OF HANDRAIL POSTS. ADJUST LOCATION OF TRENCH IF REQUIRED TO MISS POST AND VERIFY LOCATION WITH MECHANICAL CONTRACTOR.

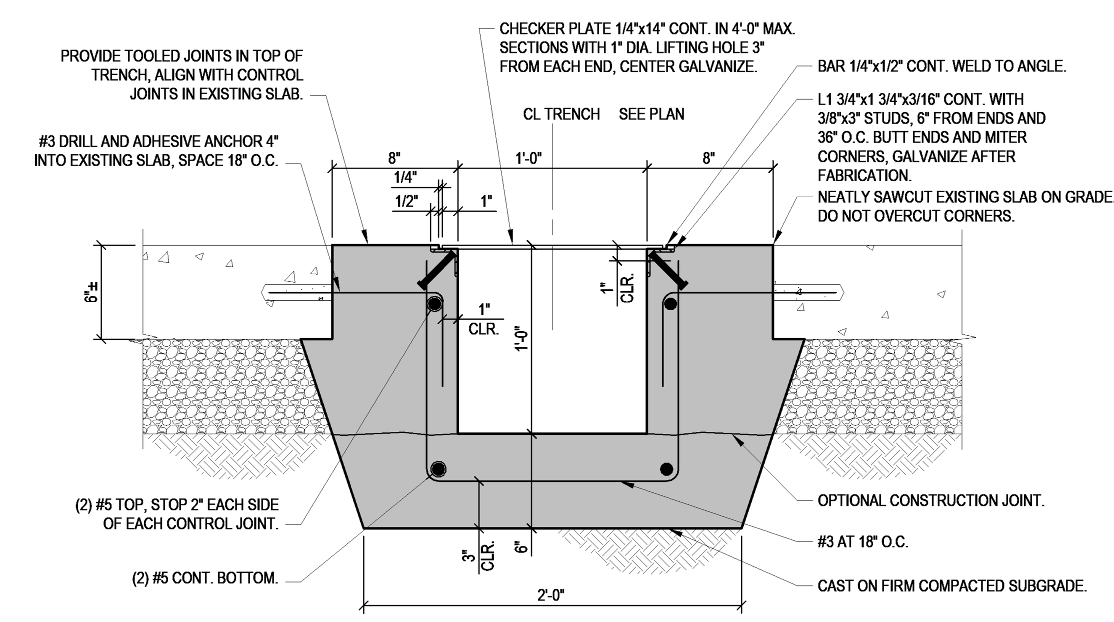


1 / S201.8
## SECTION
1 1/2" = 1'-0"

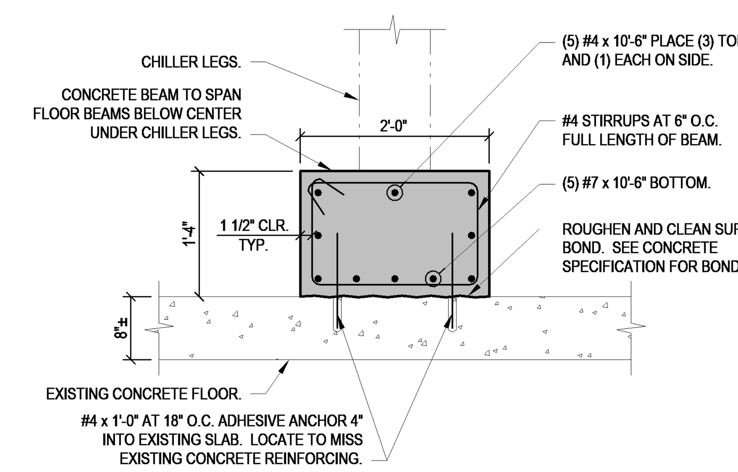


2 / S201.8
## SECTION
3/4" = 1'-0"

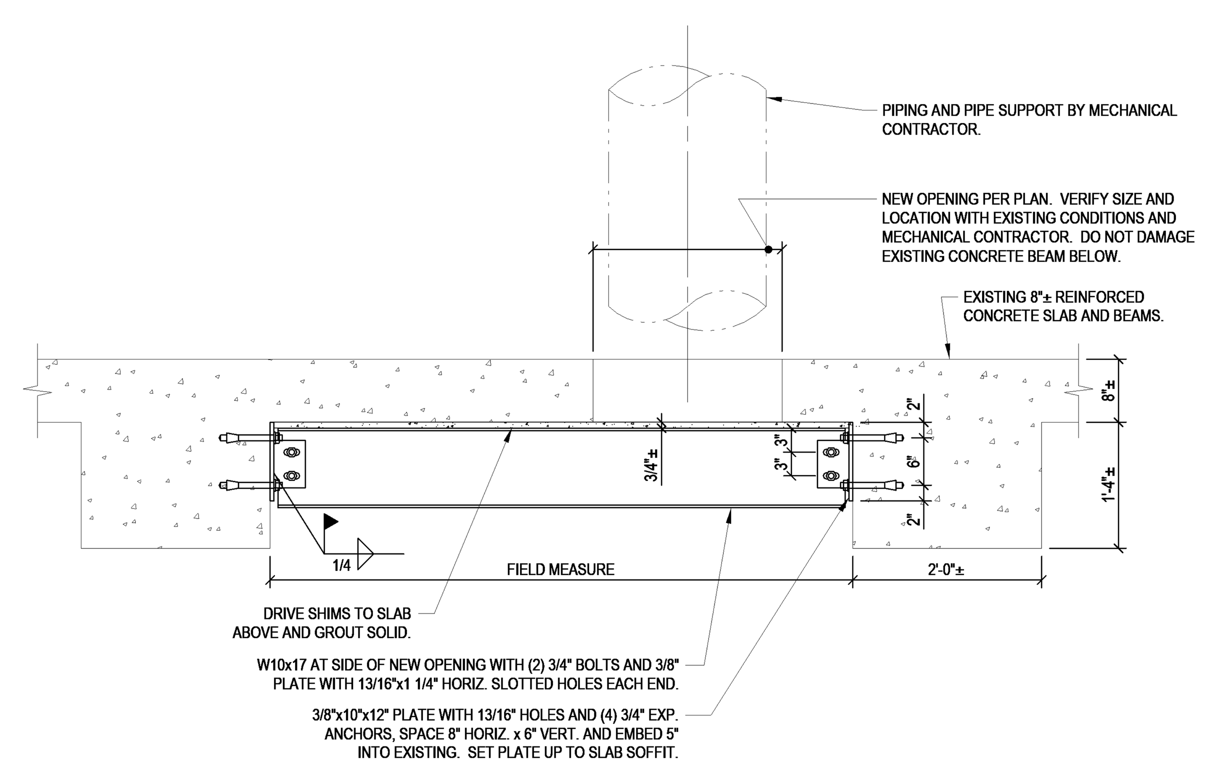


3 / S201.8
## SECTION
3/4" = 1'-0"

CHAMPLIN
ARCHITECTURE

720 E Pete Rose Way, Suite 140
Cincinnati, OH 45202
T 513.241.4474 F 513.241.0081
thinkchamplin.com

THINK CREATE REALIZE

Affiliated Engineers

THP

UNIVERSITY OF KENTUCKY

# CAMPUS INFRASTRUCTURE & C.U.P.

**BID PACKAGE 8**

University of Kentucky

LEXINGTON, KENTUCKY

**ISSUANCES**

| No. | Description | Date |
|---|---|---|
| 1 | Issued for Bid and Permit | 01/12/18 |

| | |
|---|---|
| Drawn By | JPH |
| Checked By | WAH |
| Client Number | 514 |
| THP Number | 15133.02 |

STATE OF KENTUCKY GREGORY R. WAGNER 21849 LICENSED PROFESSIONAL ENGINEER
1/12/2018

PARTIAL PLANS CUP BUILDING FIRST FLOOR

S201.8

1/12/2018 1:57:48 PM